This is a reproduction of a library book that was digitized by Google as part of an ongoing effort to preserve the information in books and make it universally accessible.

Google™ books

https://books.google.com

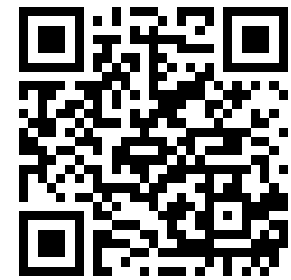

NYPL RESEARCH LIBRARIES
3 3433 10824 8711

Digitized by Google

Digitized by Google

3-VFA
4
Escher Wyss
Digitized by Google

Digitized by Google

Digitized by Google

Digitized by Google

ESCHER WYSS NEWS

Volume 1

1928

INDEX

Published by Escher Wyss & Co. S. A.

1928

AGENTS FOR UNITED STATES
THE NATIONAL POWER MACHINERY CORP.
2912 CHANIN BLDG., NEW YORK

Digitized by Google

THE NEW YORK
PUBLIC LIBRARY
524829A
ASTOR, LENOX AND
TILDEN FOUNDATIONS
R 1931

INDEX

Escher Wyss News

Volume 1

1928

*

Index of authors

	Page
Ackeret J.: Cavitation phenomena in water turbines. Experimental methods for determining potential flow diagrams (appendix)	40, 174
Bauer H.: The Zoelly steam turbine and its recent development	10, 86
The 710 lbs/sq. in. Zoelly bleeder turbine of the Arnau Paper Mill (Czechoslovakia)	121
Braun E.: Report on the governor tests performed with the new actuator of Messrs. Escher Wyss & Co. on the 2500 HP Francis turbine of the Kubel Power Station	139
Clerc J. F.: The board and paper mills of Dr. Cicero da Silva Prado in Fazenda Corruputuba (Brazil)	27
Gagg A.: The Escher Wyss turbine governor for automatic plants	143
Gerber H.: Experimental methods for determining potential flow diagrams	171
v. Gonzenbach H.: Automatic drainage plants	188
Grossmann G.: Geared vertical water turbines for small and medium outputs	181
Hermann G.: Hydraulic considerations for the lay-out of pipelines and the erection of surge tanks	176
Hirt M.: The introduction of the Escher Wyss rotary valve and its subsequent development	77
Irminger R.: The history of the firm of Escher Wyss & Co.	4
Kühne G.: Questions bearing on the storage of hydraulic power by means of storage pumps	63
Lendorff B.: The Zoelly marine turbine of the twin screw steamship "Nieuw Zeeland"	159
Maas A.: Economic considerations regarding different power storage possibilities	45
Mettler D.: The new cheese depot of the Emmental A.-G. in Lucerne	153
Moser J.: The water turbine installations at Iwanashiro (Japan)	84
Nyffenegger H.: The Zoelly steam turbo-locomotive	51, 95, 163
Peter R.: Autovapor plant for the concentration of tobacco liquid supplied to the Italian Tobacco Monopoly	49
Apparatus for concentrating waste sulphite liquor	132
Scholl G.: Small refrigerators	192
Seitz E.: Interesting new turbine constructions and reconstructions	35
Sonderegger H.: Electrical welding of thick bodies	100
Steinmann W.: Apparatus for treating slaughter house offal, carcases and fish offal	151
Stodola A.: Performance trial of an 11000 kW Zoelly steam turbine	16
Thomann R.: Tests with nozzles for Pelton turbines under natural operating heads	146
Vogel W.: The Escher Wyss variable speed gear. A new friction gear with large and constant range of regulation	112
Walder E.: The electric steam generating plant in the Padalarang Paper Mill	126
Wyss F.: The paper-making plant of the Stroostofabriek "Phœnix", Veendam	107

Digitized by Google

Index of subjects

Page

Autovapor plants: Autovapor plant for the concentration of tobacco liquid supplied to the Italian Tobacco Monopoly. By R. Peter 49

Apparatus for concentrating waste sulphite liquor By R. Peter 132

Gears: The Escher Wyss variable speed gear. A new friction gear with large and constant range of regulation. By W. Vogel 112

Historical: History of the firm of Escher Wyss & Co. By R. Irminger 4

Locomotives: The Zoelly steam turbo-locomotive. By H. Nyffenegger 51, 95, 163

Marine turbines: The Zoelly marine turbine of the twin screw steamship "Nieuw Zeeland". By B. Lendorff 159

Paper-making machines: The board and paper mills of Dr. Cicero da Silva Prado in Fazenda Corruputuba (Brazil). By J. F. Clerc 27

The paper-making plant of the Stroostoffabriek "Phœnix", Veendam. By F. Wyss 107

Pumps: Economic considerations regarding the different power storage possibilities. By A. Maas 45

Questions bearing on the storage of hydraulic power by means of storage pumps. By G. Kühne 63

Automatic drainage plants. By H. v. Gonzenbach 188

Refrigerating machines: The new cheese depot of the Emmental A.-G. in Lucerne. By D. Mettler 153
Small refrigerators. By G. Scholl 192

Steam boilers: The electric steam generating plant in the Padalarang Paper Mill. By E. Walder . 126

Steam turbines: The Zoelly steam turbine and its recent development. By H. Bauer 10, 86

Performance trial of an 11000 kW "Zoelly" Steam Turbine. By Prof. Dr. A. Stodola 16

Efficiencies of steam turbines 25

Page

The 710 lbs/sq. in. Zoelly bleeder turbine of the Arnau Paper Mill. By H. Bauer 121

Valves: The introduction of the Escher Wyss rotary valve and its subsequent development. By M. Hirt 77

Waste utilization plants: Apparatus for treating slaughter house offal, carcases and fish offal. By W. Steinmann 151

Water turbines: Interesting new turbine constructions and reconstructions. By E. Seitz . . . 35

Cavitation phenomena in water turbines. By J. Ackeret 40

The introduction of Escher Wyss rotary valve and its subsequent development. By M. Hirt . 77

The water turbine installations at Inawashiro (Japan). By J. Moser 84

Report on the governor tests performed with the new actuator of Messrs. Escher Wyss & Co. on the 2500 HP Francis turbine of the Kubel Power Station. By Prof. Dr. E. Braun, Stuttgart . . . 139

The Escher Wyss turbine governor for automatic plants. By A. Gagg 143

Tests with nozzles for Pelton turbines under natural operating heads. By R. Thomann . . . 146

Experimental methods for determining potential flow diagrams. By H. Gerber 171

Experimental methods for determining potential flow diagrams (Appendix). By J. Ackeret . . . 174

Hydraulic considerations for the lay-out of pipelines and the erection of surge tanks. By G. Hermann 176

Geared vertical water turbines for small and medium outputs. By G. Grossmann 181

Welding: Electrical welding of thick bodies. By H. Sonderegger 100

Miscellaneous 59, 104, 201

New Publications 32

Digitized by Google

Digitized by Google

Aktiengesellschaft der Maschinen-fabriken Escher, Wyss & Compagnie.

ESCHER WYSS NEWS

Machinery — Per. and soc. publ., House organs

Volume I

1

January 1928

TD 2-ED

ENB

Published by Escher Wyss & Co. S. A.

The Founder of the Engineering Works Escher Wyss & Co.
Born 1775. Died 1859.

Contents

	Page
1. Introduction	3
2. The history of the firm of Escher Wyss & Co.	4
3. The modern development of the Zoelly steam turbine	10
4. Performance trial of a 11000 kW Zoelly steam turbine	16
5. Efficiencies of steam turbines	25
6. The board and paper mills of Dr. Cicero da Silva Prado in Fazenda Corruputuba (Brazil)	27
7. New publications	32

AGENTS FOR UNITED STATES
THE NATIONAL POWER MACHINERY CORP.
2912 CHANIN BLDG., NEW YORK

Digitized by Google

Products of Messrs. Escher Wyss & Co.

Steam Turbines

„Zoelly" system

Normal condensing land and ships' turbines; locomotive turbines; bleeder turbines; back-pressure turbines; mixed-pressure turbines; low-pressure turbines; small turbines; high-pressure turbines; condensing and preheating installations.

Steam Boilers

Electrically heated boilers; horizontal fire tube boilers; Cornish boilers; marine boilers; water tube and vertical tube boilers; boiler work of every description.

Compressors

High-pressure turbo-compressors for mines and other purposes; turbo-blowers for blast furnaces; converter plants for steel works; coke oven blowers; special gas blowers for the chemical industry. Completely automatic regulators for constant pressure, constant volume and other purposes, automatic blow-off regulators; volume integrators, etc.

Autovapor Compression and Concentrating Plants

Special turbo-compressors for water vapour; automatic vapour pressure regulators; apparatus for neutralizing vapours.

Water Turbines

with Francis, Pelton, propeller and Kaplan wheels. Complete high-pressure pipelines. Rotary valves. Precision oil-pressure governors.

Pumps

Equipment and installations for complete waterworks. High-pressure and low-pressure turbo-pumps, water storage pumps.

Paper-making Machinery

Installations for complete paper mills; paper-making machines of every description and for every working width; digesters; beaters; edge runners; pulp grinders.

Waste Utilization Plants

for carcases and slaughter house offal; fish meal factories for any capacity.

Ships

Complete paddle wheel boats and screw steamers for lakes and inland navigation.

Special catalogues sent to prospective customers on application.

Digitized by Google

ESCHER WYSS NEWS

PUBLISHED BY MESSRS. ESCHER WYSS & Co. S. A.

VOLUME 1 — No. 1 — JANUARY 1928

The „Escher Wyss News" will be published periodically in bi-monthly issues. Reprinting of articles or illustrations appearing therein will only be permitted when source thereof is duly acknowledged. Single numbers 1/-; one year's subscription 5/-.

INTRODUCTION

In order to keep our business friends posted with the technical progress and improvements in our special lines of manufacture, we have decided to publish the

ESCHER WYSS NEWS

which will appear in occasional numbers and contain up-to-date information on the activities of our firm. We hope thus to have satisfied an often expressed wish of our friends.

ESCHER WYSS & CO. S. A.

AGENTS FOR UNITED STATES
THE NATIONAL POWER MACHINERY CORP.
2912 CHANIN BLDG., NEW YORK

Digitized by Google

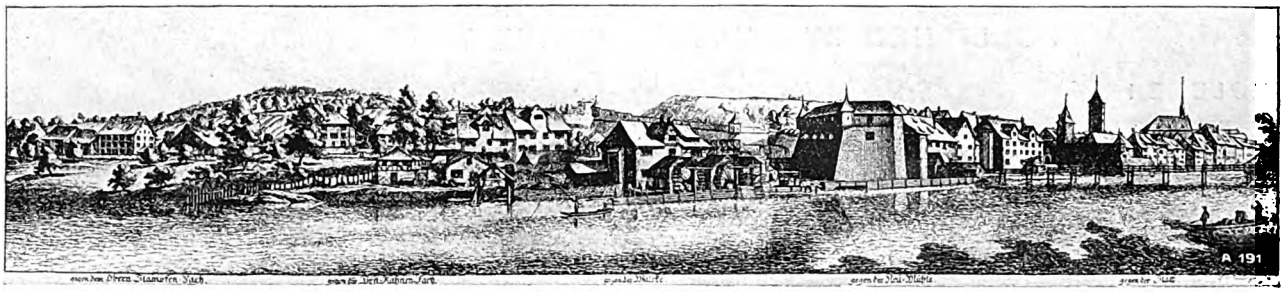

The Neumühle quarter of Zurich at the beginning of the 19th. century.

HISTORY OF THE FIRM OF ESCHER WYSS & Co *)

By Rudolph Irminger.

The firm of Escher Wyss & Co. is the oldest engineering works in Switzerland. It was founded in 1805 by Hans Caspar Escher. On March 10 th of that year the inaugural meeting was convened and Hans Caspar Escher, born on August 10 th 1775, was entrusted with the management of the newly-founded engineering works at that memorable meeting. For fifty four years he swayed the fortunes of the firm.

Ten shares of 8000 florins each formed the capital of the Company. Cotton spinning was first taken up, and already in 1807 Escher was able to show his shareholders the first spinning machines turned out in the shops.

By 1810 the undertaking was well-established on a sound basis and owned extensive workshops and a considerable capital.

In 1831 the engineering works and the cotton trading department were commercially separated from one another, and in the following year a substantial increase of profits was shown by the engineering works.

In the period 1834 to 1835 more than 204 machines for treating cotton were sold. Subsequently line shafting and power engines were also manufactured in the shops and supplied to various spinning mills. The rapid development of the many spinning mills, all competing with each other, made it appear advisable to look out for a new field of activity.

According to the existing documents of the Company, the construction of «Iron steamers» was taken up in 1837 and the heavy demand of the different Swiss lakes and the neighbouring German rivers for such steamboats induced the engineering works to push this new line of activity «in order to provide for work in slack times», as the abovementioned documents put it. The first boats built were such a success that the good reputation of the firm spread far beyond the Swiss borders. The third

*) Holgné: Gründung und Entwicklung der Spinnerei und Maschinenfabrik Escher Wyss & Cie., 1805—1859
Hottinger: Geschichtliches aus der Schweizerischen Metall- und Maschinenindustrie, 1921

View of the Neumühle quarter in 1895 showing the workshops of Messrs. Escher Wyss & Co.

Digitized by Google

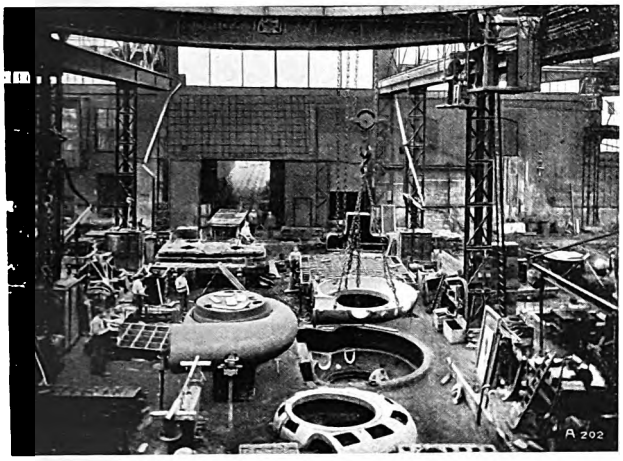

Iron foundry.

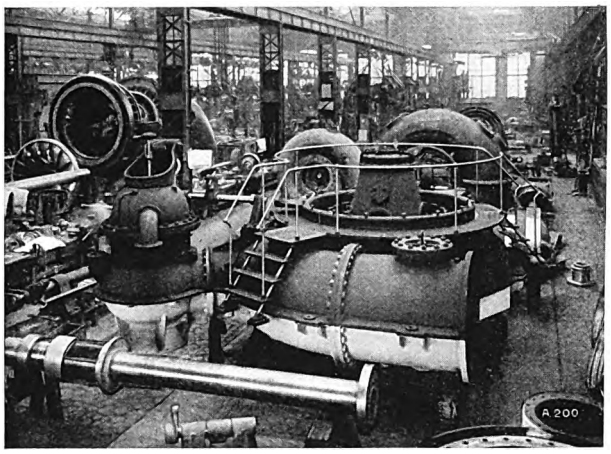

Water turbine assembly shops.

boat was supplied for the Danube and then followed boats in ever-increasing numbers for most of the European rivers and lakes.

The statistics of the boiler shops tell us that the first land boiler was supplied in 1837 to 1838 and this paved the way for the manufacture of steam engines.

However, apart from these special branches, attention was very soon paid to new industries and in 1840 we find the firm busy with the manufacture of apparatus for paper production, which was the incentive for building paper-making machinery. This department also developed with great success.

In this year the construction of steam engines was also taken up. The competition of the steam engine gave the oldest branch of power engine design a new impulse in the «fifties». The water wheels built long previously no longer satisfied requirements, and only after the tangential water wheels and turbines had been introduced, was a better utilization of water power ensured. In 1844 the first Jonval turbines left the shops and each successive year recorded an increased production and turnover.

The right hand of the untiring founder of the firm was his son Albert, born in 1807. This very talented, ingenious and enterprising young man was first of all head of the technical works and later on managing partner of the firm. All too young he died in 1845, only 38 years old. Through his son's death, the whole burden of the undertaking once again rested on Kaspar Escher's shoulders; in spite of his advanced age, he bore this burden with a remarkable and enviable energy.

The spinning mill was now completely separated from the engineering works. The latter continued to develop most favourably and gradually reduced the spinning mills to insignificance, until they were ultimately shut down.

The small and modest shops of the «Neumühle» no longer sufficed for the needs of the works. Therefore, buildings and water powers were purchased on municipal territory, partly adjoining the old shops

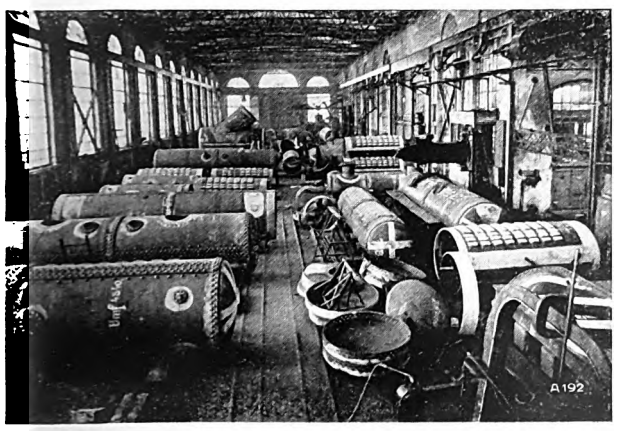

Boiler shop.

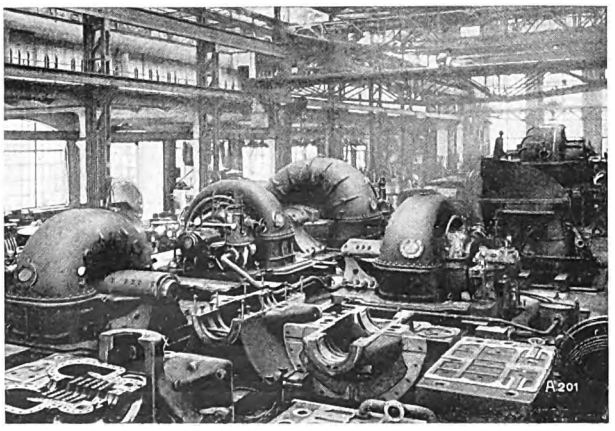

Steam turbine assembly shops.

Digitized by Google

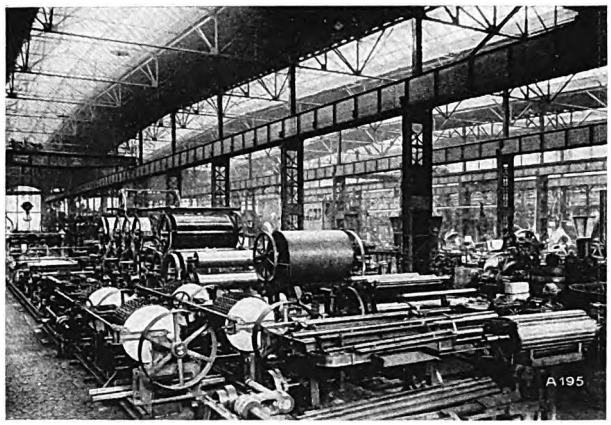

Paper-making machinery department.

and partly on the lower «Mühlesteg», and, in 1856, the so-called «Stampfenbach» lying in the suburb Unterstrass.

On August 29th 1859, two years after he had founded a works in Ravensburg (Württemberg). Hans Caspar Escher died at the advanced age of 84 years.

In 1889 the undertaking was turned into a limited company and the manufacture of refrigerating machinery was taken up in the same year.

After periods of alternating success, a decisive turn in the affairs of the firm set in at the beginning of the new century. Director H. Zoelly who had been on the firm's staff since 1888, invented the «Zoelly steam turbine», which from the very onset satisfied the most stringent conditions and excelled by reason of its simplicity and economy.

The products of Messrs. Escher Wyss & Co. were known even then as first class the World over. The new firm, by dint of honest endeavour and independent struggle, has not only maintained but greatly enhanced the world-wide reputation handed down to it by its founder Hans Kaspar Escher.

The «Stampfenbach» area, purchased in 1856, had meanwhile also become far too small for the needs of the firm, so that a new works, equipped with modern machine tools and appliances, became a paramount necessity. New shops were built in the west of the city of Zurich, in the so-called «Hard», and to these they moved in 1894—1895.

When laying out the new works, the ruling idea was to plan the buildings in such a manner that they could be enlarged in all directions for future extensions. The subsidiary shops surround the main shops, which latter form the heart of the whole works plant — a very appropriate lay-out allowing of the most economical transporting of the unfinished pieces from the subsidiary shops to the main shops, where they are finished, assembled and loaded for despatch.

The main shops have an area of 161,000 sq. ft. The whole building is subdivided into 15 halls (7 high and 8 low halls). Their practical arrangement avoids long and wearisome transports and all the 15 halls are equipped with electric travelling cranes and are interconnected by a main railway line served by an electric accumulator locomotive.

The large hall of the iron foundry has an area of 48150 sq. ft. and is subdivided into 7 sections, all of which are provided with skylights. The foundry is equipped with up-to-date machinery and appliances and receives its materials from the material stores lying in the rear. The castings cleaning department adjoining the foundry is equipped with sand blasts, cleaning drums and pneumatic tools. All castings leaving the cleaning department have to pass the control department. The metal foundry forms a self-contained section, though it is connected with the iron foundry. The patterns required in the foundry are made in the firm's own pattern shop, which is, equipped with the most modern machinery.

The boiler shop is 400 feet long by 60 feet broad. It is provided with the most modern working machines and appliances, such as a plate bending machine, a complete hydraulic rivetting plant etc., which permit of manufacturing boiler sections of up to 10 feet in length and 1.2 inches in thickness. The electric welding department has a staff of over 30 and consumes about 1 million electrodes each year.

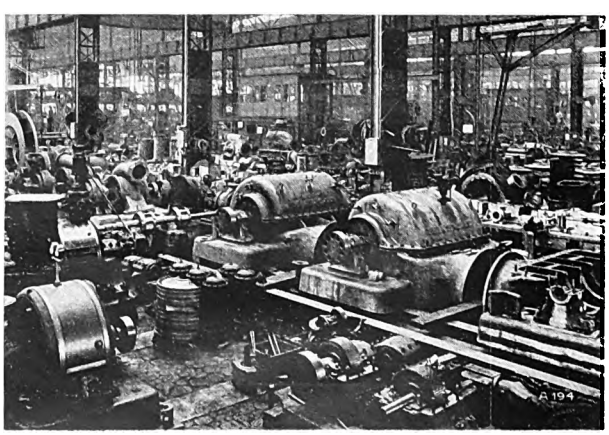

Turbo-pump department.

Digitized by Google

Assembly hall for refrigerating machinery.

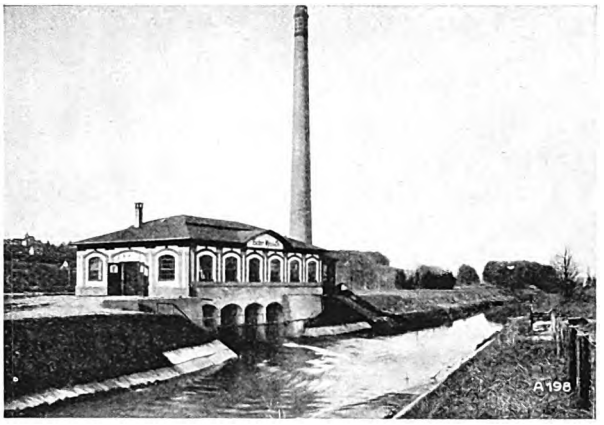

Power station of the Ravensburg works.

The high-tension three-phase current generated in our own hydro-electric power station at Bremgarten-Zufikon is converted into low-tension alternating and direct current in the power house of the works, and used for power and lighting purposes. The power house has a 1000 kW Zoelly steam turbine as power stand-by and a 340 kW vertical compound steam engine as reserve for light. Adjoining this power house there is a large testing department where the completely assembled steam turbines, turbo-pumps and turbo-compressors are subjected to careful tests before leaving the works.

A separate testing plant, equipped with the most modern apparatus, has been provided for testing hydraulic machinery, and more especially water turbines, which latter may be tested under heads of from 7 to 13 feet and water volumes up to 300 gals. per second. Quite recently special apparatus has been added to this plant for investigating the cavitation phenomena especially in Kaplan and propeller turbines. The water required for the tests is supplied by a pumping plant. All measuring instruments and apparatus are of the latest design. *)

Apart from this testing plant for low-pressure turbines, the firm owns a testing plant for high-pressure Pelton turbines at Horgen on the Lake of Zurich. In this plant Pelton turbines for heads up to 400 feet and water volumes up to 11 gals. per second can be tested.

The appropriate lay-out and equipment of the Zurich Works, which satisfy the most fastidious requirements in every respect, have served as a model for many works erected at later dates.

To facilitate commercial intercourse with their numerous customers in foreign countries, an independent works was established in Ravensburg (Württemberg) in 1857, and also an affiliated company, the Società Anonima De Pretto-Escher Wyss in Schio (Italy), which embodies the former firm of Silvio de Pretto & Co., was formed in 1920.

*) Robert Dubs: „Die neue Wasserturbinen-Versuchsanstalt der A.-G. der Maschinenfabriken von Escher Wyss & Cie. in Zürich". Schweiz. Bauzeitung Bd. LXXX/1922.

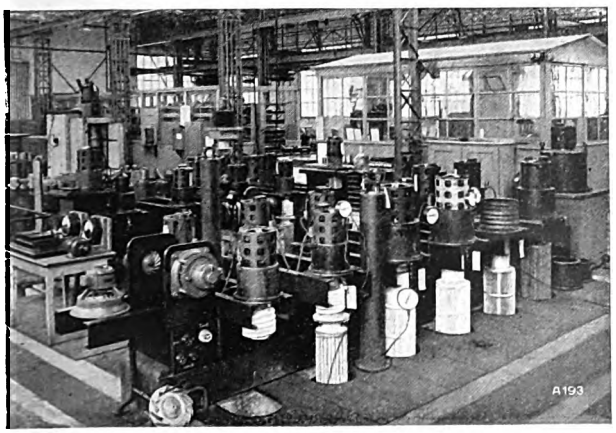

Test bed for "Autofrigor" refrigerating machines.

Power Station Zufikon-Bremgarten.

Digitized by Google

The ground area covered by all buildings to-day amounts to 4,601,000 sq. ft. Hand in hand with the uninterrupted development of the works, the number of employees and workmen has steadily increased and now figures at 3500.

The firm has its own offices and agencies in most countries of the World, so that the intercourse between the home firm and its business friends distributed all over the World is rendered easy.

The shares capital of the Company at present is 11,500,000 Swiss francs (£ 460,000).

The manufacture of water turbines, taken up in 1844, has continued developing until it is now one of the most important lines of the firm.

Up to the present time the water turbine department has executed 7945 water turbines for a total capacity of 6,648,591 H. P., amongst which are the largest turbines so far built in Europe for an individual capacity of 50,000 H. P.

The firm has a world-wide reputation for the manufacture of water turbines for all possible conditions. In the course of years, the construction was continually improved to satisfy the ever-increasing requirements. Thus with spiral turbines and also larger units in open tanks, the customary inner regulation was replaced by the more perfect external regulation. High specific speeds were attained, especially with low-pressure turbines, which rendered direct coupling of the turbines with the electric generators possible in most cases. A further improvement was the introduction of the jet deflectors and needle nozzle regulation for Pelton turbines. The design of Francis turbines was continuously improved and they may now be operated under heads up to 1000 feet. For small heads up to 50 feet, propeller and Kaplan turbines have been increasingly used of late years, and efficiencies of more than

View of the Lindau Works.

90 per cent have been attained with these new turbine types.

Very considerable progress has been made in the design of water turbine governors. Mechanical governors have been completely ousted by oil-pressure governors, of which more than 2000 have been supplied in the short space of 20 years. These governors are manufactured in series and may be employed for any kind of turbine.

The utilization of high heads caused a rapid development of the pipeline department, whose projecting work and deliveries are closely connected with those of the turbine department. Since 1886 the firm has occupied itself with the manufacture and laying down of pipelines, and the large number of most important plants in all parts of the World bear testimony of the firm's efficiency in this special line. Electrically welded pipelines with patent welded joints laid uncovered, and linings for tunnels have of late been very successfully executed by the firm.

The Zoelly turbine built by Messrs. Escher

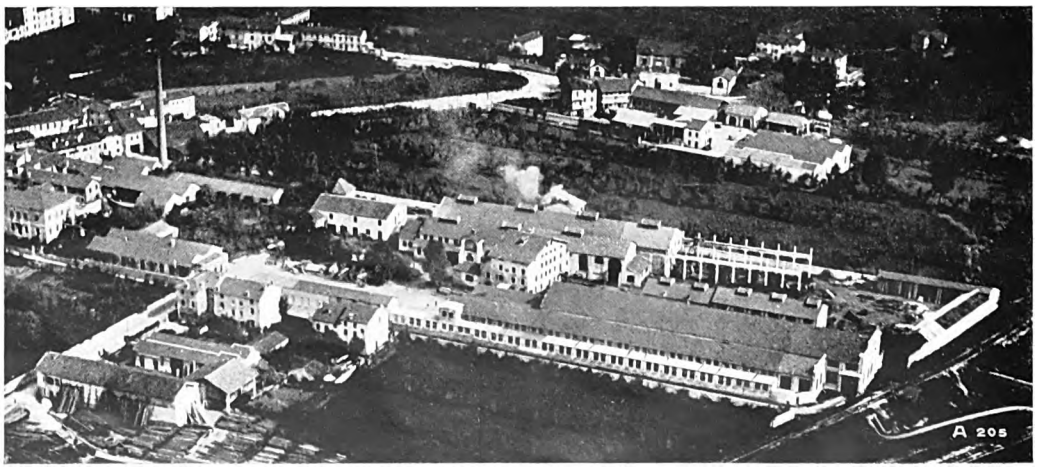

Aeroplane view of the Schio Works.

Digitized by Google

Wyss & Co. and so named after their President Dr. H. Zoelly, is a multi-stage impulse turbine with a moderate number of stages. The pure pressure stage system was selected with a view to obtaining a turbine of maximum reliability in service and maximum efficiency. Whilst designing his steam turbine, Dr. Zoelly was backed up by his vast experience in water turbine design so that the Zoelly turbine from the very beginning gave most excellent results. Since 1903 this turbine has been an unparalleled success, as is borne out by the fact that Messrs. Escher Wyss & Co. alone, without the numerous licensed firms, have up to date supplied 650 turbines for a total capacity of 3,138,000 H. P.

Simultaneously with the land turbine, the marine turbine was developed, and the Zoelly design has proved to be excellently suited for mercantile ships and torpedo boats. The first turbo-tug «Zurich» to do duty on the Rhine was also equipped with a «Zoelly» marine turbine.

The steam boiler department has up till now supplied approximately 2500 steam boilers and about five times that number of steam tanks and reservoirs of various designs.

For some time past this department has also extended its activities to the construction of boilers for high pressures and modern furnaces for all kinds of fuel. Apart from this, the manufacture of electrically heated boilers of the «Revel system» has been a standing speciality of this department for many years.

In 1903 the manufacture of centrifugal pumps was taken up. This field of activity embraces high and low-pressure pumps for all purposes, such as high-pressure pumps for water storage plants, water supply plants, mine drainage plants, boiler feed plants, etc. and low-pressure pumps for irrigation and drainage plants, condensing plants, building purposes and for all kinds of service in works. The largest water storage pumps at present running in the World were manufactured in the shops of Messrs. Escher Wyss & Co.

Following up the successful development of the Zoelly steam turbine, Messrs. Escher Wyss & Co. at an early date studied the design of turbo-blowers and turbo-compressors and made elaborate tests, which led to the manufacture of these machines.

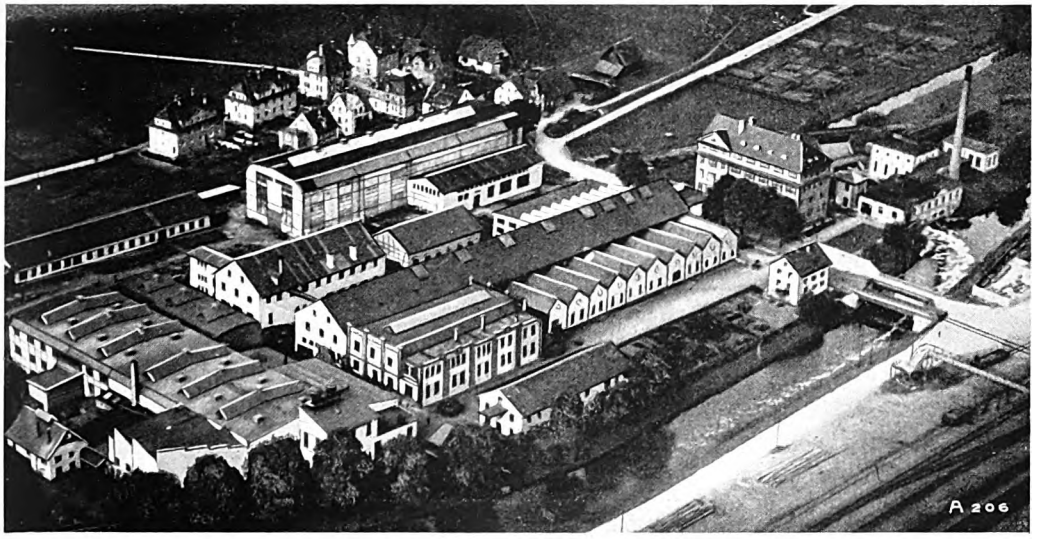

Aeroplane view of the Ravensburg Works.

In connection with the turbo-compressors it may not be amiss to mention a new field of activity of the firm's, viz: evaporation plants with vapour compression. This innovation has aroused much interest because its application economizes large quantities of coal. Messrs. Escher Wyss & Co. build complete evaporating plants («Autovapors») of the Kummler & Matter & Wirth system for all purposes.

The manufacture of refrigerating machinery, commenced in 1889, has been crowned with success. The firm builds carbonic acid and ammonia machines up to the highest capacities. Lately compound refrigerating plants have also been supplied in large numbers.

The latest departure in refrigerating technics is the small refrigerator «Autofrigor». This

Digitized by Google

machine has been designed to satisfy the needs of the household and tradesmen in regard to having a hygienic ice safe at their disposal for preserving provisions or for certain processes involved during the manufacture of products. The urgent necessity and popularity of such small refrigerating machines is best proved by the sale of many thousands of apparatus within the few years that they have been on the market. To increase the sales still further, the buildings of the former Zeppelin Works in Lindau on the Lake of Constance were purchased by Escher Wyss in 1921, and already in 1922 the first Autofrigors left the works. Since then the turnover of these works has steadily increased.

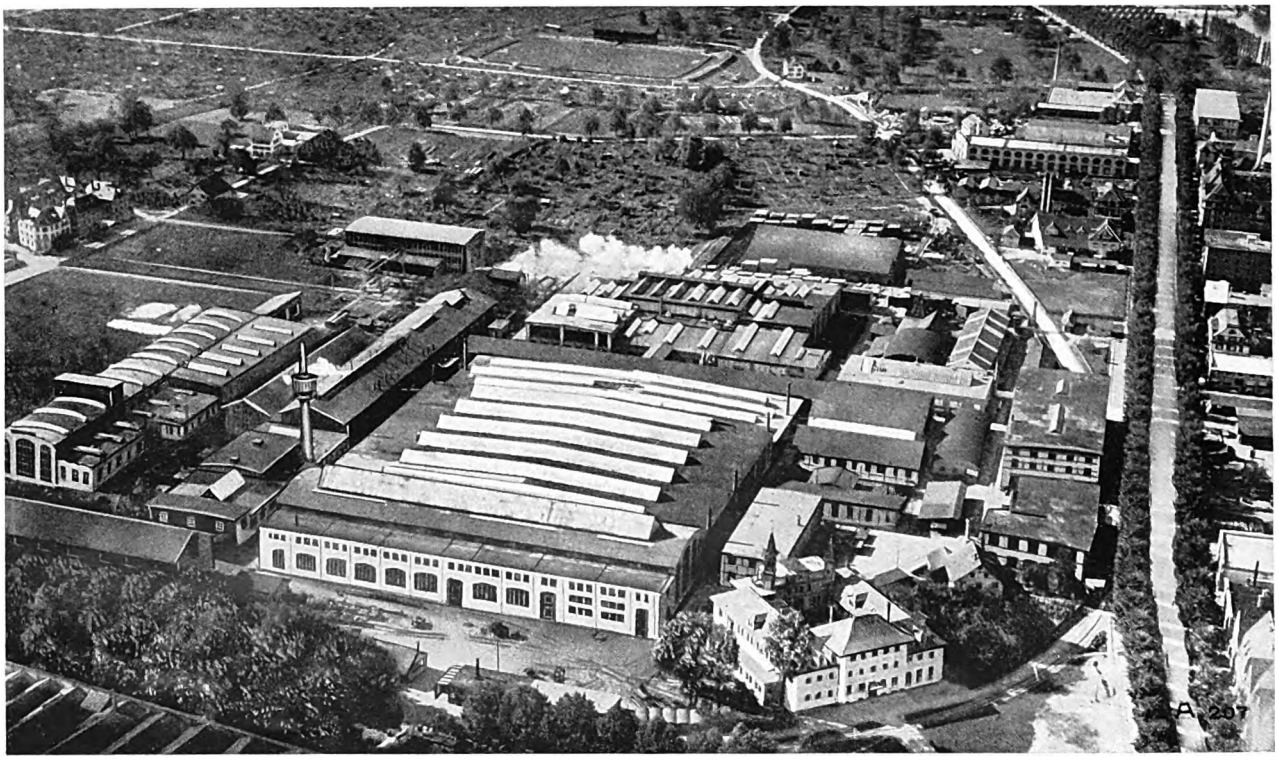

Aeroplane view of the Zurich Works.

The Zoelly steam turbine and its recent development.

By Hermann Bauer, Engineer-in-chief.

For many years modern technics have endeavoured to develop steam turbine design in such a manner that machines of highest efficiency which would utilize the fuel to the best advantage should result. This trend induced Messrs. Escher Wyss & Co. to design new types both for small and large outputs, which in continuous service have achieved results that were considered quite impossible a few years ago. In this connection, thermodynamic efficiencies of 85 per cent have been attained, whilst in pre-war days thermodynamic efficiencies of approximately 75 per cent were accepted as excellent. It should be pointed out that with these new types, the Zoelly principle of absolute reliability in service has been adhered to, so that these high efficiencies have not been secured at the expense of reliability.

The better utilization of heat was assisted by considerable improvements, which were rendered possible by the introduction of higher steam pressures and temperatures. Logically these innovations influenced the design of the modern steam turbines in a very marked degree. Now that Messrs. Escher Wyss & Co. have had turbines operating for some time at pressures not only of 425 and 710 lbs./sq. in., but also of 1420 and 2560 lbs./sq. in., detailed account of which will be given in a later article, the problem

Digitized by Google

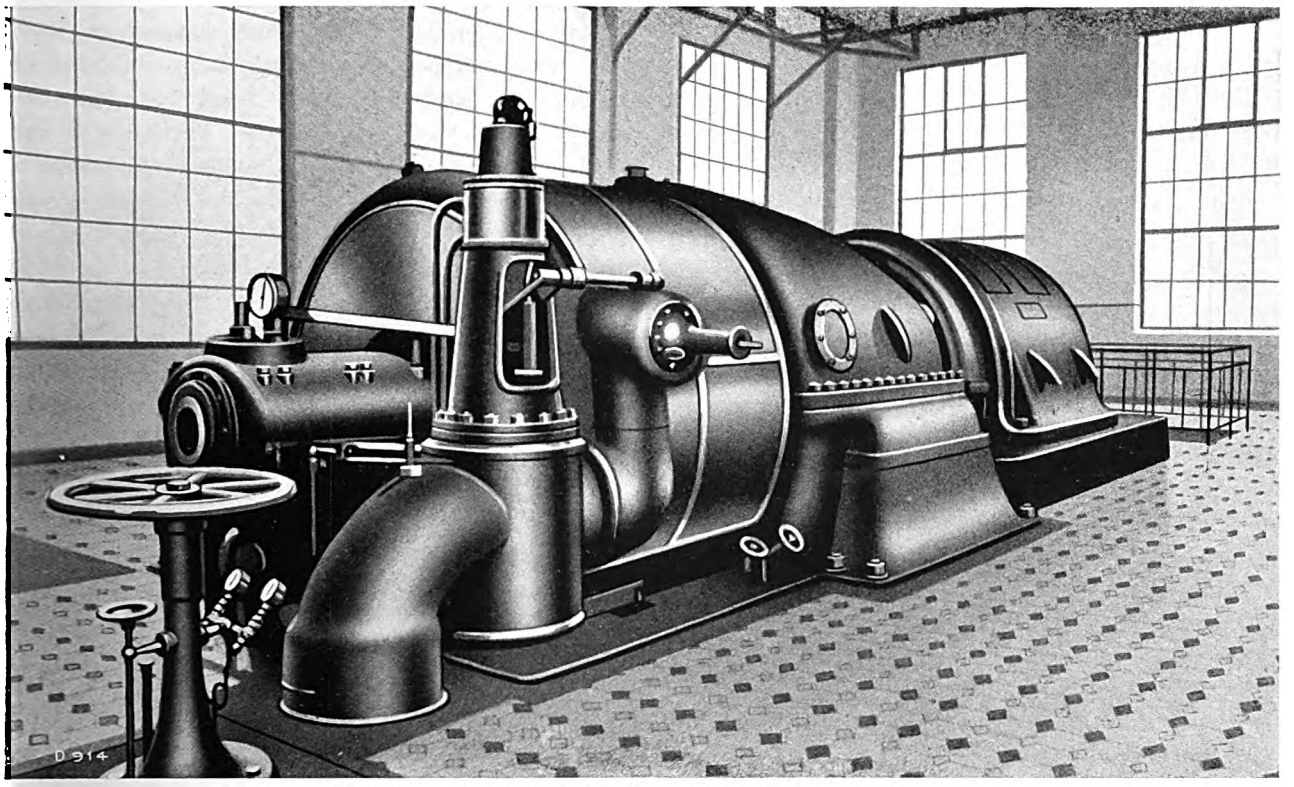

Fig 1. 11000 KW turbine, 3000 R. P. M. for the Wehrden Power Station.

of the high-pressure Zoelly turbine may be considered as solved. These manifold new conditions have resulted in numerous important improvements to the individual parts of the turbine without, however, affecting the main features of the pure impulse arrangement. The modern Zoelly turbine is, therefore, also of very simple design.

The choice of the number of stages of a turbine is a most important item, as on it depend to a large extent the production costs, its reliability and its economy. Increasing thermodynamic efficiency was feasible in two ways:

Whilst some firms sought to obtain maximum efficiencies by reducing the steam velocities and considerably increasing the number of stages, Escher Wyss & Co. succeeded in obtaining these maximum values on large units simply by enlarging the diameter of the runner wheels and thereby increasing their velocity, and by raising the speed of smaller units and adopting gearing. By this means the best ratio of steam velocity to peripheral velocity is secured. The standard steam velocities of the former types were in general adhered to in the new Zoelly turbine and a slight increase of the number of stages was made only when high steam pressures and high heat drops were employed. However, it must not be overlooked that these measures would not by themselves secure maximum efficiency. The choice of the most suitable blade angles and proportionings, improvements of individual parts with a view to reducing leakage losses to a minimum, the application of experience gained over many years work, and last but not least, excellent workmanship — all these factors very decidedly influence the efficiency.

The Zoelly turbine in its latest form still retains the following characteristic features of the former types:

Extremely short, simple and robust design,

Large clearances between runner wheel and guide wheel blades,

Moderate stressing of the rotating parts,

Simple oil-pressure governing,

Maximum reliability coupled with simple manipulation.

The principal characteristics of the various Zoelly turbine types, such as normal condensing, geared, bleeder, back-pressure, and high-pressure turbines

Digitized by Google

will be discussed in a series of articles to be published in the «Escher Wyss News».

1. Normal Condensing Turbines.

The ever-increasing size of the power stations has necessitated ever larger units, for which turbines were the most suitable form of prime mover. However, the manufacture of these large units was really only feasible after further progress had been made in the design of turbo-generators. The present day trend is to reduce the initial costs to a minimum and to instal the maximum power within a given space. These requirements can best be satisfied by single-casing turbines and it is, therfore, quite natural that endeavours are made to develop the single-casing units for large outputs. A considerable increase in the number of stages results in an unfavourable ratio of the initial costs to the economy of steam secured by the increased number of stages, and there remains but one course viz: either to enlarge the wheel diameters, or to increase the peripheral speeds. The main difficulties met in securing large outputs and handling large quantities of steam lay in the design of the low-pressure end. This is the chief item controlling the maximum output per unit, since the increasing losses and stressing of the material due to the increased quantities of steam materially affect the results obtained from the turbine. It is an interesting fact that for more than 25 years, i. e. from the initial development of the Zoelly turbine, only a limited number of wheels were provided in the low-pressure part and as a result of this long experience and of continuous tests made on individual wheels, it has been possible to design single-cylinder turbines with a limited number of stages for very large outputs and pressures up to 500 lbs./sq. in. The normal maximum outputs of the present Zoelly turbines are 20,000 KW at 3000 R. P. M. with approximately ten stages, 40,000 KW at 1500 R. P. M. with approximately twelve stages. For higher pressures of from 320 to 450 lbs./sq. in., one or two additional wheels are employed. The standard design of the single-cylinder turbine for 3000 R. P. M. and 15,000 KW rated output is illustrated in Fig. 9. The number of stages is 10, which is very moderate, and advantageously permits the use of a short design. The reduced distance between the bearings ensures steady vibrationless running and absolute reliability. It is obvious that the low-pressure wheel diameters are made as large as practical, a point, which does not give rise to any trouble with the materials now available. The peripheral speeds have been kept within reasonable limits so that undue stressing of the rotating parts is avoided. Apart from this, the stresses can be controlled by the thickness of the discs and blades. Each runner wheel rotates in a chamber formed by two guide wheels (diaphragms), in which, by the impulse system, there is a uniform steam pressure whereby it is possible to provide large clearances between the rotating and fixed guide blades. Power station engineers will readily appreciate this important factor. The clearances at the entrance to the guide blades are at least 0.08 to 0.12″, and 0.2″ at the exit from the blades, whilst radially they amount to 0.2″ in the high-pressure part and increase slightly in the low-pressure part.

The runner wheels are produced from a specially forged steel and are machined into such a form that each part has equal strength. They are fixed on conical seatings of the shaft and the T-shaped grooves on the periphery accomodate the dove-tails of the blades, Fig. 2.

The considerable experience in the manufacture of discs of all sizes and the elaborate tests carried out with such discs has given Escher Wyss & Co. every confidence that they have definitely solved the problem of blade and disc vibration. These vibrations have been completely eliminated even in the largest wheels, so that steady running and absolute reliability can be guaranteed.

The angles and proportionings of the runner wheel blades very substantially affect the efficiency of the machine. These blades are made of the highest quality material, usually of five per cent nickel steel. The small and medium-sized blades are milled from sheet metal, the latter with a cross-section tapering towards the outer end. The blades of the low-pressure wheels, which are subject to higher peripheral speeds and, therefore, also to greater stresses, are produced from the solid bar in one piece with the distancing pieces, and are also formed so that each section is of equal strength. Where chemical influences might destroy the blading, for instance when using acidiferous steam, etc., or for blades operating in the saturated steam zone, corrosion-proof material is employed.

The guide wheels have also been considerably improved. The guide blades are cast in the diaphragms with the utmost precision, the greatest care being taken in the correct dimensioning and scrupulous machining of the steam channels, as this con-

Digitized by Google

siderably reduces the frictional and eddying losses. This work is performed by special machines and

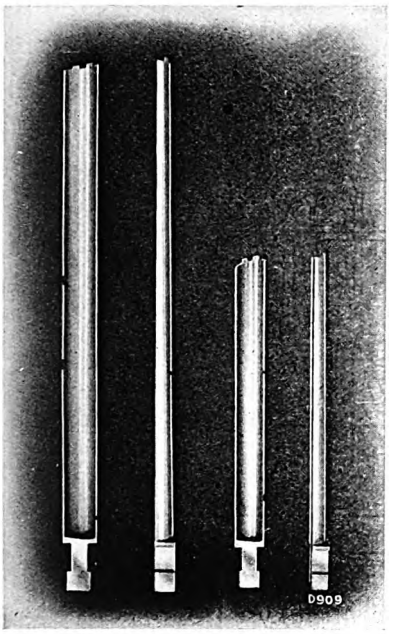

Fig. 2. Runner whel blades

manual filing, and is so perfect that built-up diaphragms constructed of milled parts, entailing heavy expenses, no longer offer any advantage even when the blade heights are very small. A further feature, especially of the high-pressure guide wheels, is that they are cast with two walls, i. e. they have an insulating hollow space, as is clearly visible in Fig. 9. Also all guide wheels overlap each other at their periphery, which results in an increased stiffening of the wheels against any possible deflection. The guide wheels, made of a special cast material, are fixed in both halves of the casing in such a manner that they leave a clearance of 0.06″ radially between their periphery and the casing. The expansion of the diaphragms, formerly a source of trouble, and a factor which has to be increasingly studied with the high temperatures now in vogue, does not give rise to trouble with our new design as the wheels simply expand towards the turbine casing and the thin brass strips fixed on their periphery are pressed against the casing. The overlapping of the guide wheels at the same time prevents leakage of steam at this point.

In normal cases, the turbine casing is made of best quality cast-steel. The cast-iron exhaust steam branch is very liberally dimensioned, so that the large volumes of steam may be easily handled.

To avoid frictional and eddying losses as far as possible, baffle plates are provided in the exhaust steam branch. The low-pressure double bearing is built into the recess of this long branch, whereby the distance between the turbine shaft bearings is kept as short as possible.

The exhaust branch rests with robust feet on the bedplate, whilst the turbine casing proper is unsupported, but is bolted to the high-pressure pedestal. This design ensures free radial expansion, whilst the longitudinal expansion is taken up by the high-pressure bearing, which is pushed forward by the turbine casing in a wedge-shaped slot. As the thrust bearing is fixed in this pedestal, it allows the turbine rotor to follow the longitudinal expansion of the casing, so that large blade clearances are always maintained. Temperatures of 750° Fahr. and more may, therefore, be employed with absolute safety with our turbines. It is common knowledge that the thermal efficiency of a plant may be increased by preheating the boiler feed water with steam bled from the turbine and for this purpose tappings are provided from which steam is extracted in proportion to the degree of feed heating.

A subsequent article will deal with feed heating plants installed by our firm.

Fig. 3 illustrates the well-known oil-pressure throttling governor introduced by Zoelly. The governor, differential pistons, oil-distributing valve and the oil pump drive are now built inside the high-pressure pedestal.

The oil-pressure control gear influences according to the speed variations the servomotor pistons and the steam throttle valve is thereby put into action. Due to the efficient type of the Zoelly blading, this simple throttle control permits of high efficiencies being secured at partial loads without having recourse to complicated nozzle regulating mechanisms and by this means reliability is greatly increased. Regarding the safety devices, it should be mentioned that with an abnormal rise in speed, two completely independent emergency devices are brought into action. The device shown in Fig. 4 has an eccentric ring fixed to the shaft, which operates the throttle valve via the oil-distributing valve, whilst the device illustrated in Fig. 5 closes the main stop valve mechanically by means of a system of springs and levers. A second eccentric ring is provided for this latter device.

Digitized by Google

Fig. 1 illustrates the simple and robust design of a turbine for an output of from 11,000 to 15,000 KW at 3000 R. P. M., whilst Fig. 7 shows a single-casing turbine of 40,000 KW output at 1500 R. P. M. with upper half removed. The increased mean diameter of the wheels in the low-pressure part can readily be seen in the illustration, which also shows the short and simple construction of a 40,000 KW turbine, due to the fact that the impulse system permits large outputs being secured from a single casing.

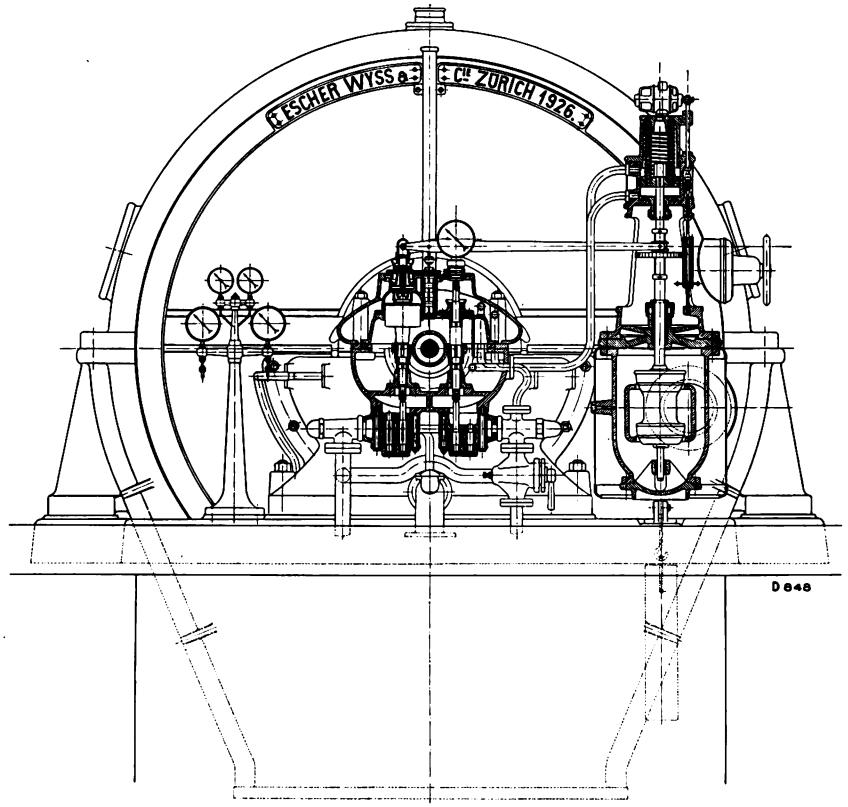

Fig. 3. Section through the governor.

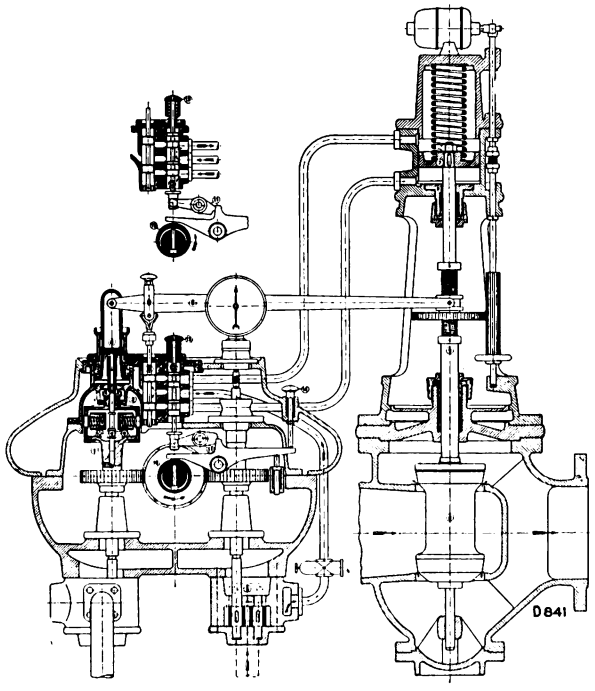

Fig. 4. Oil-pressure energency governor.

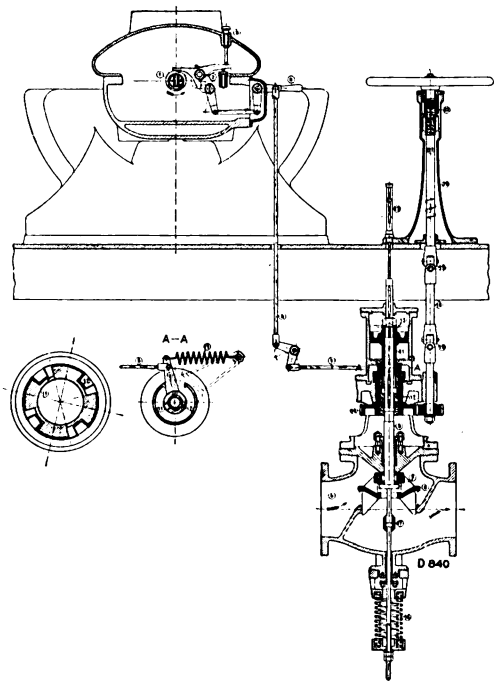

Fig. 5. Mechanically operated energency governor.

Digitized by Google

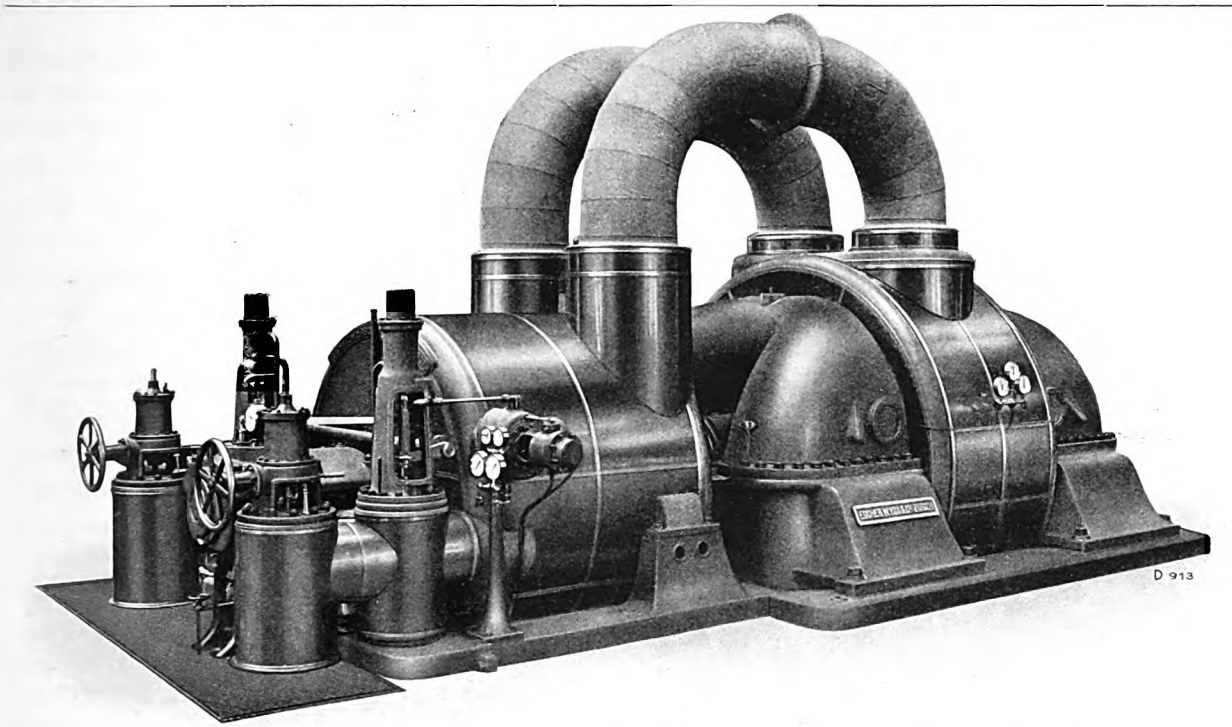

Fig. 6. 27000 KW Zoelly steam turbine, 3000 R P. M., supplied to the Strassburg Electricity Works.

When outputs are required, which exceed the above-mentioned limits, the large quantities of steam can no longer be dealt with by a single low-pressure end, especially if very high vacua are required, and then we have to adopt the two-cylinder turbine.

As may be gathered from the sectional elevation of a two-cylinder turbine shown in Fig. 7, the low-pressure end of the turbine is divided into two halves so that each half deals with half of the steam quantity. Consequently the blade lengths can be kept within normal limits and do not exceed those of the largest single-casing machines and also they are not subjected to undue stresses.

The individual turbine elements in general correspond to those of the single-casing turbines, and

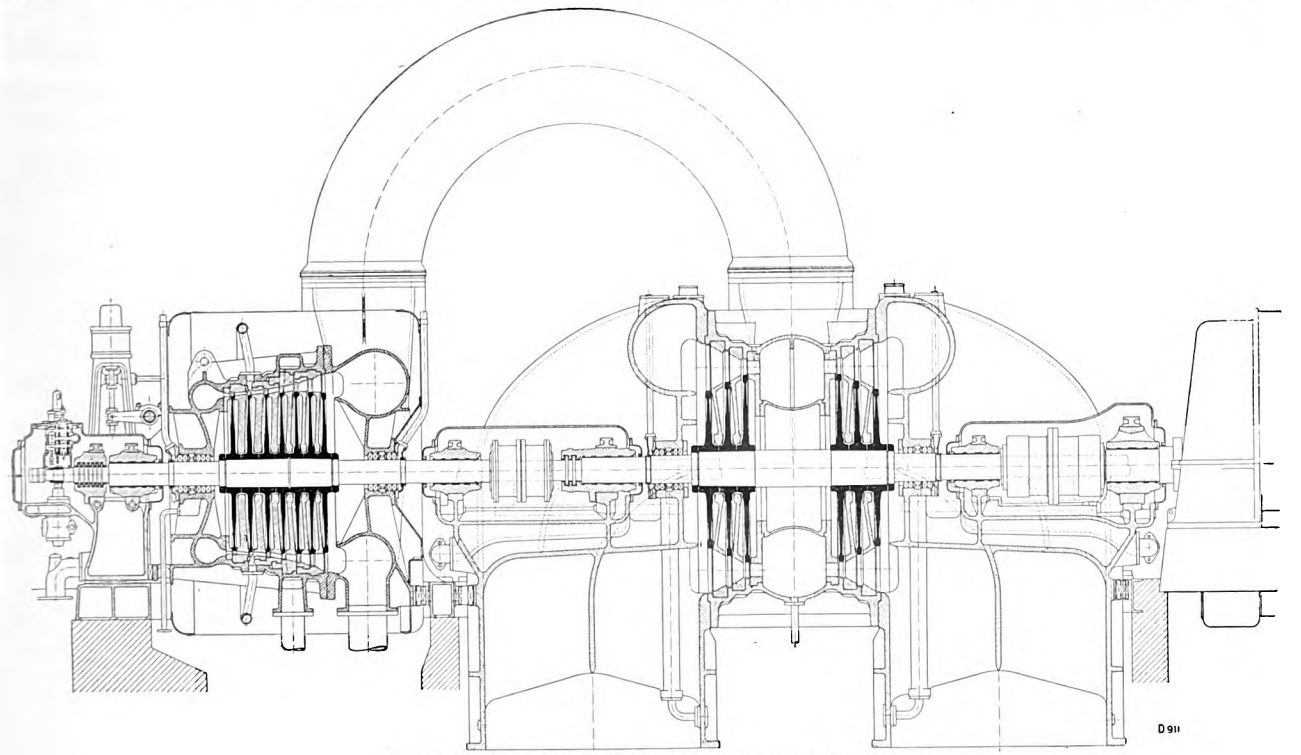

Fig. 7 Sectional elevation of a two-cylinder Zoelly turbine

Digitized by Google

the number of stages again is kept as small as possible. With due regard to the large quantities of steam to be admitted, two positively-connected throttle valves are provided, but in principle the simple governing mechanism is retained.

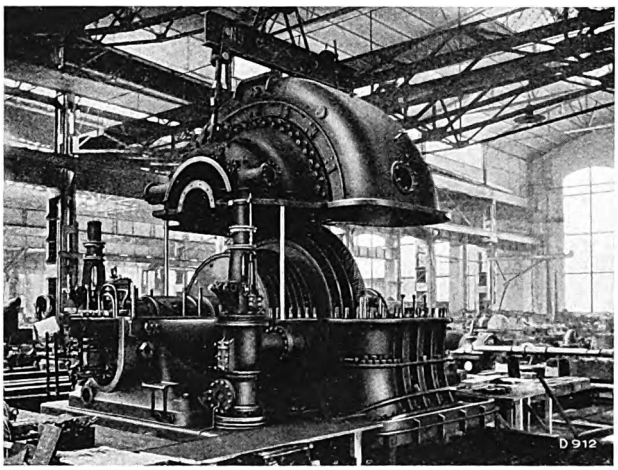

Fig. 8. 40000 KW Zoelly steam turbine with top half removed.

Fig. 6 illustrates a two-casing Zoelly turbine as supplied by us to the Strassburg Electricity Works, the maximum cotinuous output of which is 27,000 KW at 3000 R. P. M. The inlet pressure is 355 lbs./sq. in. and the steam temperature 660° Fahr., whilst the condensate is preheated to 275° Fahr., for which purpose two bleeder branches are provided. The capacity of such two-casing turbines may be increased very considerably by subdividing the low-pressure end, and is at present limited only by the turbo-generators to be coupled with them. We are to-day able to build 3000 R. P. M. turbines with twin exhausts for normal outputs of 40,000 KW, assuming good vacua. Where reduced vacua are employed, the above-mentioned maximum outputs for the single-casing and two-casing turbines may be considerably exceeded. With several of our new turbines steam consumption tests have recently been conducted, which have given excellent results. We will conclude this article by publishing the results secured by Professor Dr. A. Stodola of Zurich on an 11,500 KW turbine supplied by us to Wehrden in Saarbrücken. These tests were described by Professor Stodola in the «Zeitschrift des Vereins Deutscher Ingenieure» (Journal of the Association of German Engineers), in Vol. 71. of 1927, and we publish hereunder verbatim the report as it appeared in a revised reprint of the Journal.

Performance trial of a 11 000 K. W. „Zoelly" Steam Turbine.

By Prof. Dr. A. Stodola, Zürich.

There is very little information available in technical literature regarding the performance of modern impulse blading. I was, therefore, glad indeed to take the opportunity of testing a turbine, whereby it was possible to definitely establish the important value of «blade efficiency» or hydraulic efficiency, which is the indication of the perfection of the energy conversion in the blades.

In addition, the subsequently described tests permit a comparison being made between the merits of single and multi-casing turbines, and furnish an answer to the often difficult question of whether the one or the other design should be given preference.

The turbine, Fig. 9, was installed by Messrs. Escher Wyss & Co., Zurich, in the Wehrden Power Station at the end of 1926 with the object of supplying conjointly the Röchling Iron and Steel Works at Völklingen and the City of Saarbrücken with electrical energy.

The design of the turbine includes noteworthy improvements over the older designs. For instance, the guide wheels from stages 1 to 5 are constructed with blades cast into very heavy rims which fit into hollow diaphragms and are rivetted to the same. All the guide wheel rims fit into each other by means of notches in such a manner that each diaphragm assists in considerably increasing the rigidity of its neighbour. If the diaphragms are placed under stress, the rims thereof have the tendency to press outwards rather than bend, which is prevented by the above-mentioned notches. Tests by the manufacturers definitely proved that the distortions under equal

Table I. **Dimensions of the Turbine.**

Stage No.	Mean Blade Diameter		Blade angles in degrees			
			Guide Blades		Runner Blades	
	mm.	in.	Inlet	Outlet	Inlet	Outlet
1	1200	47.2	90	14	30	20
2	1220	48 0	120	14	30	20
3	1245	49.0	115	14	30	20
4	1300	1 2	120	14	30	20
5	1350	53.1	120	12	30	20
6	1410	55.5	120	11	28	20
7	1460	57.4	125	10	28	20
8	1520	59.8	125	10	28	20
9	1560	61.4	130	12.5	28	20
10	1600	63.0	120	18	33	35

High-pressure bearing diameter 7.1″ Length 14.2″
Low-pressure bearing diameter 7.9″ Length 15.7″
Weight of the rotor 8700 lbs.

Digitized by Google

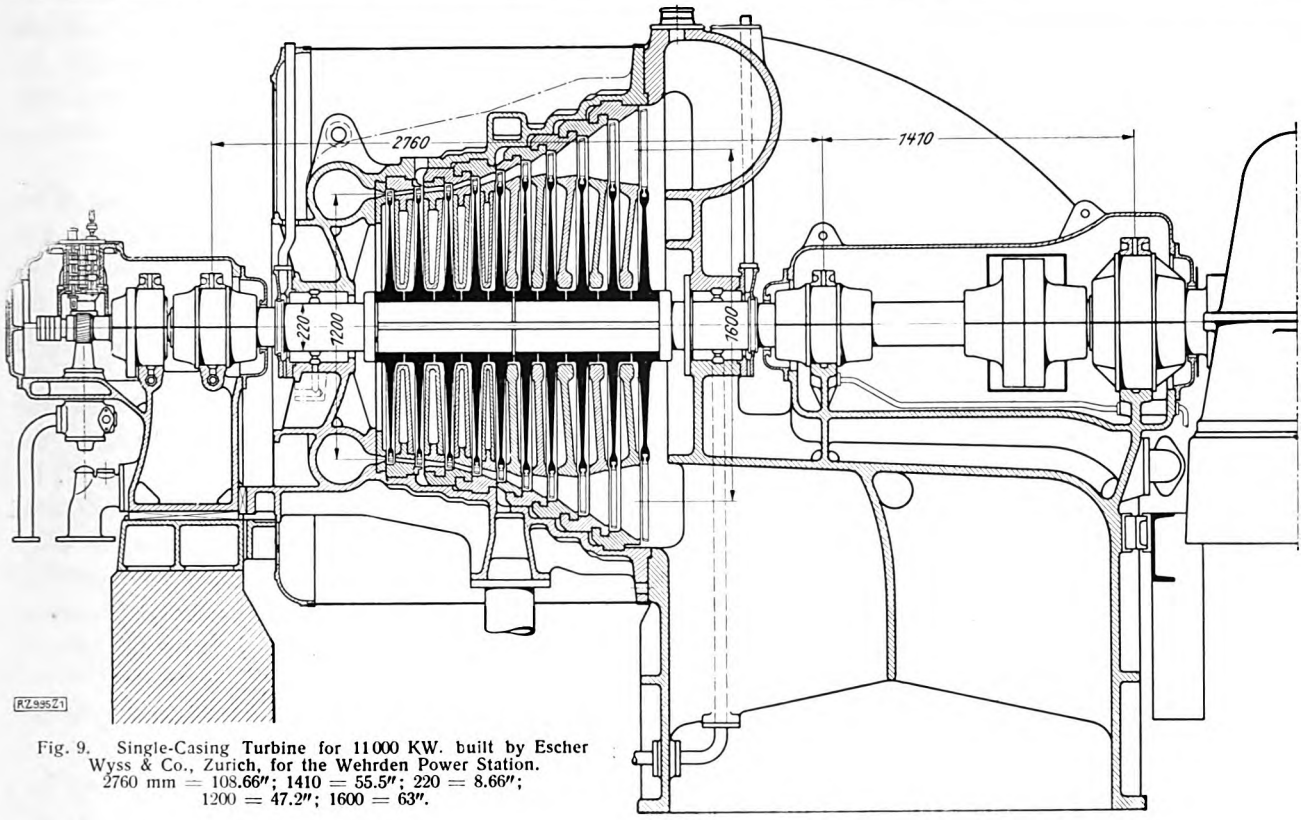

Fig. 9. Single-Casing Turbine for 11000 KW. built by Escher Wyss & Co., Zurich, for the Wehrden Power Station. 2760 mm = 108.66″; 1410 = 55.5″; 220 = 8.66″; 1200 = 47.2″; 1600 = 63″.

strains are substantially reduced, and further the correct centric position of the guide wheels is maintained.

Further the exhaust steam branch was redesigned in such a manner that the steam flow is no longer reversed, but enters the exhaust pipe after being deflected through the unavoidable angle of 90°. To improve the design still further the exhaust steam flow is split by means of a division wall into an upper and a lower half, which at the same time strengthens the casing so that the low-pressure bearing can be arranged in a recess adjacent to the gland. Otherwise it can be stated that the manufacturers of the «Zoelly» turbine retained in a noteworthy manner the other well-tried constructional details, such as the carbon glands, the multi-collar thrust bearing for taking up the axial thrust and the well-known regulating gear with its permanent, yet small oil flow.[1])

By the courtesy of the manufacturers I am in the position to publish Table I giving dimensions of the turbine, which in conjunction with the test results submitted herewith should prove of much use to engineers.

Table II. **Clearances of the Turbine.**

Stage		1	2	3	4	5	6	7	8	9	10
Axial clearance between the guide wheel and runner wheel at the inlet side of the runner wheels	Right in.	0.0866	0.0708	0.0984	0.1063	0.0984	0.1180	0.1180	0.1495	0.1495	0.1890
	Left „	0.0866	0.0708	0.0944	0.1101	0 0905	0.1260	0.1141	0.1495	0.1495	0.1850
Axial clearance at the outlet side of runner wheels	Right „	0.3230	0.3266	0.2754	0.2754	0.2754	0.3540	0.3540	0.3540	0.3935	—
	Left „	0.3540	0.3540	0.3150	0.2754	0.2754	0.3150	0.3540	0.3540	0.3935	—
Radial clearances between the runner wheels and casing	Right „	0.1890	0.1890	0.2125	0.2085	0.2085	0.2009	0.2009	0.2560	0.6020	0.6340
	Left „										

For the purpose of ascertaining the alternator efficiency it was necessary to remove the turbine rotor and this afforded an opportunity to measure the inter-stage clearances and radial clearances of the runner wheels, stated with permission of the manufacturers in Table II. The temperature conditions of the turbine can be gauged from the fact that the turbine was shut down at 1 a. m. on the 5 th. December, 1926, the housing was opened at

[1]) Stodola: „Dampf- und Gasturbinen", 6th. Edition, Page 461.

Digitized by Google

8 a. m., and the clearances measured the same day at 6 p. m. With the object of determining the steam consumptions and the efficiencies of the alternator, tests were conducted on this turbine from the 4 th. to the 6 th. December, by means of which the thermodynamic efficiency could be calculated.

The method of procedure corresponded in general with the normal standard practice with special attention to the water-jet air extraction pump. The following is a detailed description of the tests:

Measuring Instruments and Procedure.

The inlet pressures were measured by means of pressure gauges which were calibrated by a mercury column at the Mechanical Laboratory of the Federal Technical High School in Switzerland. To determine the vacuum on the right and left hand sides of the casing at the shaft level as well as immediately at the inlet flange to the condenser, a simple mercury column was used whose readings were compared with a barometer by Fuess calibrated before and after the tests. There were also used short U-shaped barometer tubes which had been filled with mercury and boiled, the difference in level between the two branches indicating directly the absolute pressures.

The U-shaped barometer tubes showed on the average about 2 mm. less absolute pressure than indicated by the open mercury columns. This difference may be explained by any of the following causes: leakages at the connections for the india rubber tubings, incomplete boiling-out of the tubes, or of the mercury, subsequent penetration of air or vapours into the mercury columns. Taking into consideration the subsequent supplementary test given herewith, the readings of the open mercury columns were given three times more weight than those of the U-barometer tubes.

For determining the temperatures, mercury thermometers were employed, which were calibrated immediately before and after the tests by the National Technical Institute in Berlin, and by the Federal Bureau for Measures and Weights in Berne. The thermometers were inserted in closed pockets, fitted with «Callendar» heating fins, and filled with mercury.

The steam consumption was derived by measuring the condensate in two wrought-iron tanks filled alternatively, and which were fitted with a common division wall, whereby an overflow allowed the contents amounting to approximately 440 gallons to be exactly determined. On account of the low condensate temperature the question of correction for surface evaporation did not arise. During the calibration, the slight differences of the water temperatures were duly considered and a correction made.

The condensate escaping from the drains of the glands, the bleeder branch and the inlet belt was collected, and was found to equal approximately only $^1/_{5000}$ of the total steam consumption during the main test. For the gland losses, the outlet velocity from the exhaust piping was estimated at 49 ft/sec. On the basis of a pipe diameter of 1.57″ and the supposition that the radial clearance between the external carbon ring and the shaft was 0.0157″, the combined loss of the two glands could be estimated as being 242 lbs/hr. Subsequent measurements taken at this point on other turbines by means of Pitot tubes, which were heated to prevent condensation, gave substantially smaller velocities under apparently identical conditions.

As a last correction, the steam quantity which is extracted from the condenser by the air ejector and is entrained with the air abstracted comes into consideration. As the opinion is often expressed that this steam quantity can substantially influence the final result, its determination should prove of special interest.

In a special test, the valves on the inlet and outlet piping to and from the water reservoir of the air pump were closed and the temperature rise of the circulating water observed resulting from the pure pumping work, and the heat of the exhausted mixture of air and steam. The following results were noted:

1.	Duration of the test . . .	1 hr.
2.	Temperature of the entering mixture of air and steam	68° F.
3.	Pressure of the mixture of air and steam	0.834″ Hg. abs.
4.	Initial temperature of the circulating air ejector water	62.78° F.
5.	Final temperature of the circulating air ejector water	68.18° F.
6.	Capacity of the supply reservoir	3350 galls.
7.	Increase of heat content 33500×5.4 . . . . . =	181000 B. T. U./hr.
8.	Heat loss through the surrounding wall of about 258 sq. ft., 10″ thick and about 42.8° F. temperature of the surrounding earth work . .	3960 B. T. U./hr.

Digitized by Google

9. Total heat absorbed by the circulating water . . . . 184960 B. T. U./hr.
10. Power measured at the terminals of the electric motor 65 K. W.
11. With an efficiency of 90 % and a deduction of 12.5 H. P. for the condensate pump driven alongside, there remains 66.0 H. P. equivalent to a heating value of 66.0 × 2540 B. T. U./hr. . . . = 168000 B. T. U./hr.
12. Heat delivered up by the entrained and condensed steam (9—11) . . . . = 16960 B. T. U./hr.
13. Heat delivered up per lb. by the condensation of the mixture of air and steam at 68° F. including 3.6° F. cooling of the liquid according to Knoblauch . . . . . 1060 B. T. U./hr.
14. Quantity of steam entrained in the mixture of air and steam (12/13) . . . . . 16 lbs/hr.

(Above and all subsequent vacuum figures are based on 30″ Hg. Baro.)

Under the test conditions therefore the correction to be introduced for the jet air pump is negligibly small.

To check this result in another manner, I carried out a test in the test department of the manufacturers with a jet air pump of similar design to the one installed at Wehrden, which, however, only operated with one nozzle. The observations, which approached most closely to the conditions of the main tests at Wehrden were:

Temperature of the jet water . . . . 75° F.
Temperature of the mixture of air and water vapour . . . . . 65.9° F.
Vacuum . . . . . 28.94″ Hg.
Inhaled air quantity (measured by nozzles) . . . . . 1.74 lbs/hr.
Entrained steam quantity (measured by nozzles) . . . . . 1.65 lbs/hr.

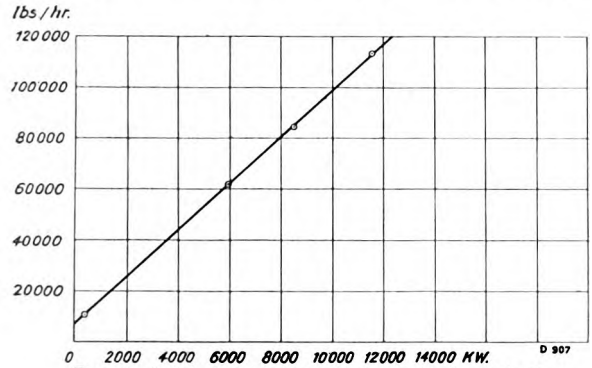

Fig. 10. Total steam consumption and turbine output at coupling.

As the air pump at Wehrden operated with 12 simlar jets, so the steam quantity drawn over during the main test amounted to 12 × 1.65 = 19.8 lbs/hr., and the quantity of air entrained 12 × 1.74 = 20.9 lbs/hr. This value corresponds closely with the values stated above of the main tests. This steam quantity amounts to a correction of less than 0.1 % of the steam consumption, and is taken account of by taking the gland losses as being 264 lbs/hr. The relatively small quantity of air extracted shows up clearly the efficiency of all the sealing arrangements and the correct proportioning of the sealing steam for the glands.

The electrical measurements were placed in the hands of the Test Department of the Swiss Electro-Technical Institute. As this Test Department is associated with the Federal Office for Measures and Weights, it has a semiofficial standing, and is recognised in Switzerland as an independent Bureau of highest authority. All instruments were calibrated before and after the tests. The determination of the generator efficiency was undertaken with special care.

Analysis of Test Results.

The variation of load during the test on the 4 th. December, 1926, was frequently rather large on account of the uneven working of the Steel Works, and enforced increasing the number of observations in order to raise the accuracy of the measurements; therefore, the electrical units were read every half minute, and the first trial at ²/₃ load cancelled. On the other hand, on the 6 th. December, thanks to the courtesy of the Steel Works (shutting down a large gas engine which frequently backfired, and curtailing other manufacturing operations), the load was far more steady and had small and not sudden variations, so that very good readings were possible. The largest variations amounted to

½ load $^{+\ 10{,}8\ \%}_{-\ 9{,}8\ \%}$ at ³/₄ load $^{+\ 4.5\ \%}_{-\ 5.3\ \%}$ at full load $^{+\ 3.5\ \%}_{-\ 3.7\ \%}$

The test results and the adiabatic heat drops are tabulated in table III. The heat drops for the main

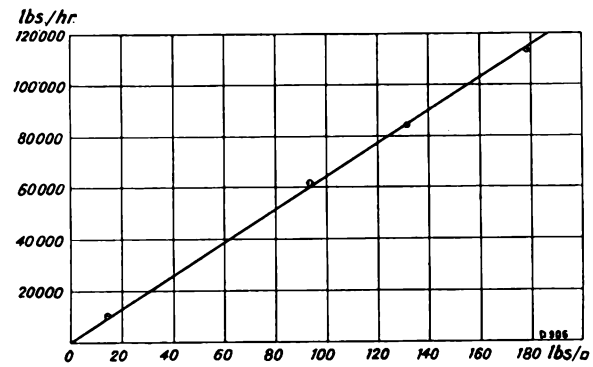

Fig. 11. Total steam consumption and pressure before first guide wheel.

Digitized by Google

Table III. **Summary of the Test Results.**

Test Number			Preliminary Tests 1		Preliminary Tests 2		Main Tests 3		Main Tests 4	
Date of trial			4. 12. 26.	4. 12. 26.	4. 12. 26.	4. 12. 26.	6. 12. 26.	6. 12. 26.	6. 12. 26.	6. 12. 26.
Duration	min.	min.	51	51	109	109	45	45	120	120
Barometer reading	mm	in. Hg.	742.5	29.233	739.8	29.127	758	29.843	757.4	29.820
Pressure before the main stop valve	ata	lbs.sq in.abs	14.917	212.0	14.790	210.0	13.50	191.6	13.894	197.2
Temperature before the main stop valve	°C	°F	324.8	616.66	336.07	636.93	350.79	663.42	350 48	662.86
Pressure before the regulating valve	ata	lbs.sq.in abs	14.5	206.0	14.7	208.9	13.458	191.1	13.720	194.9
Temperature before the regulating valve	°C	°F	323.35	614.03	334.47	634.046	349.57	661.226	348.69	659.642
Pressure before the first guide wheel	ata	lbs.sq.in.abs	1.004	14.25	6.559	93.20	9.256	132.90	12.559	178.40
Temperature before the first guide wheel, calculated with H = constant according to Knoblauch	°C	°F	308	586.4	325.156	617.28	345.3	653.540	347.358	657.244
Back-pressure at the condenser	ata	in. Hg.	0.0454	28.685	0.0241	29.302	0.0300	29.131	0.0426	28.766
Back-pressure beyond the last runner wheel or briefly, at the shaft centre	ata	in. Hg.	0.0459	28.671	0.0278	29.195	0.0340	29.015	0.0467	28.648
Temperature at the points of observation 7 and 10	°C	°F	86.37	177.466	20.37	68.666	24.20	75.560	30.15	86.270
Saturation temperature corresponding to the back-pressure at the shaft centre	°C	°F	—	—	22.34	72.212	25.85	78.530	31.33	88.394
Steam quantity	kg/hr	lbs./hr	4707	10377	27918	61548	38040	83861	51260	113009
Gland losses	kg/hr	lbs./hr	120	264	120	264	120	264	120	264
Total steam quantity	kg/hr	lbs./hr	4827	10641	28038	61812	38160	84125	51380	113273
Output at the alternator terminals	KW	KW	0	0	5477	5477	7966	7966	10975	10975
Speed	R.p.m.	R p.m.	3045	3045	3040	3040	3041	3041	3041	3041
Total losses of the alternator	KW	KW	300	300	479	479	543	543	596	596
Efficiency of the alternator	%	%	—	—	92	92	93.6	93.6	94.9	94.9
Output at the coupling	KW	KW	300	300	5956	5956	8509	8509	11571	11571
Steam consumption based on the output at the coupling	kg/KW-hr	lbs/KW-hr	16.09	35.472	4.707	10.377	4.485	9.887	4.440	9.788
Thermodynamic balance sheet.										
Adiabatic heat drop, referred to the conditions before the main stop valve and the pressure in the condenser	kcal/kg	B.T.U./lbs	—	—	249.813	449.66	245.59	442.06	237.31	427.16
Adiabatic heat drop, referred to the conditions before the first guide wheel, and the pressure at the shaft centre, according to Knoblauch	kcal/kg	B.T.U./lbs	140.3	252.54	219.84	395.70	229.59	413.25	230.39	414.70
Adiabatic heat drop, referred to the conditions before the first guide wheel and the pressure in the condenser	kcal/kg	B.T.U./lbs	140.7	253.26	223.60	402.47	232.14	417.85	232.93	419.28
Heat equivalent corresponding to the output at the coupling	kcal/kg	B.T.U./lbs	—	—	182.63	328.73	191.68	345.02	193.61	348.50
Thermodynamic efficiency based on the conditions before the main stop valve and the pressure in the condenser	%	%	—	—	73.11	73.11	78.05	78.05	81.59	81.59
Thermodynamic efficiency based on the output at the coupling and the conditions before the first guide wheel and the pressure at the shaft centre	%	%	—	—	83.08	83.08	83.49	83.49	84.03	84.03
Bearing losses, oil pump and governor driving power	KW	KW	115	115	115	115	115	115	115	115
Internal power	KW	KW	415	415	6071	6071	8624	8624	11686	11686
Heat equivalent of the internal power	kcal/kg	B.T.U./lbs	—	—	186.15	335.07	194.27	349.68	195.50	352.00
Internal thermodynamic efficiency based on the conditions before the first guide wheel and the pressure at shaft centre	%	%	—	—	84.68	84.68	84.61	84.61	84.85	84.85
Internal thermodynamic efficiency, based on the conditions before the first guide wheel and the pressure in the condenser	%	%	—	—	83.25	83.25	83.68	83.68	83.93	83.93
Recovered heat losses (reheat factor) based on the adiabatic heat drop between the conditions before the first guide wheel and the pressure at the shaft centre	%	%	—	—	3.85	3.85	3.79	3.79	3.69	3.69
Outlet velocity from the last stage	m/s	ft/sec.	—	—	172	565	191	627	204	670
Leaving loss based on the adiabatic heat drop between the first guide wheel and the pressure at the shaft centre	%	%	—	—	1.61	1.61	1.90	1.90	2.16	2.16
Mean blade efficiency	%	%	—	—	83.09	83.09	83.34	83.34	83.91	83.91

Digitized by Google

tests were calculated by logarithms employing the extremely accurate formula of Knoblauch. In Fig. 10 the total steam consumption per hour is indicated in proportion to the output, and in Fig. 11 the same steam consumption is plotted against the pressure in front of the first guide wheel. Whilst the points in the first graph lie in a curve bending round slightly towards the top, the second graph is an absolutely straight line, especially when the steam quantity is corrected to the same temperature. This graph serves the useful purpose of confirming the accuracy of the observations.

Thermodynamic Heat Balance.

The power consumption of the condenser auxiliaries could not be completely measured as the cooling water for all the turbines was dealt with conjointly, and as it was not admissible to shut down the adjacent turbines. Therefore, all the efficiencies are based on the output at the coupling without deduction for the power absorbed by condenser auxiliaries.

From the heat drops and outputs stated in Table III it is possible to calculate the heat balance and thermodynamic efficiency. The efficiency of the net output at the coupling based on the conditions before the main steam stop valve and the vacuum in the condenser is of first importance from a purely practical standpoint. It is of utmost importance that in test reports the efficiencies should be calculated on this basis[2]).

For the turbine engineer as well as for the scientifically educated works engineer, the theoretical analysis of the test results will prove of much value, as it alone permits a correct comparison with the results from other turbines. From this point of view it is advisable to analyse the entire thermodynamical process in the following three stages:

1. Throttling between the inlet of the main steam stop valve up to the first guide wheel.
2. Transformation of energy from here up to immediately after the outlet from the last runner wheel.
3. Loss of energy in the exhaust steam branch up to the point of condensation.

The best representation of the losses in these three stages is secured by following the changes in the total heat-entropy diagram, Fig. 12, where the condition line is shown for simplicity as a straight line, but which is in reality bent downwards.

The loss of each individual non-reversible step is equal to the product of the increase in entropy and the lowest temperature in the process.

The measurements taken from the chart give the following individual losses (as a fraction of the total):

Test No.	2	3	4
1. Throttling between inlet and first guide wheel	40.4 %	23.5 %	6.1 %
2. In the turbine proper	46.3 %	60.7 %	75.4 %
3. In the exhaust pipe (including carry-over losses)	13.3 %	15.8 %	18.5 %
Total	100 %	100 %	100 %

The larger throttling losses before the first guide wheel at the smaller loads are compensated by the better utilisation of the steam energy by the turbine. In fact the steam consumption per KW-hour at half load is only 5.5 % greater than at full load.

Further, the recovered energy losses (Re-heat), expressed as a fraction of the reduced adiabatic heat drop, can be determined from the entropy diagrams. For this purpose the condition lines, especially for full load, have been determined by calculation with greater accuracy than shown in Fig. 12.

The «internal power» of the turbine is obtained by adding to the power at the coupling the energy expended on bearing friction, and driving the governor and oil pump. In order not to over-estimate the internal power, I have selected the following figures, whose values have been confirmed by experience and special tests by the manufacturers:

High-pressure bearing	47 H.P.
Low-pressure bearing	67 H.P.
Thrust bearing, oil pumps and governor drive	40 H.P.
Total	154 H.P. = 115 K.W.

Thanks to the courtesy of the manufacturers I was able to calculate the carry-over losses from the last stage by means of the velocity triangles, so that all the information was available to determine the internal efficiency and the blade efficiency, which are expressed by the formula[3])

$$\eta_i = (1 + \varrho)\,\overline{\eta_s} - \zeta_a$$

in which

η_i represents the overall internal efficiency.

$\overline{\eta_s}$ represents the average blade efficiency.

ϱ represents the recovered heat from the frictional losses (re-heat), as a percentage of the adiabatic heat drops.

[2]) See: Methods of measuring the vacuum in the American" Test code for steam turbines", "Mechanical Engineering", Vol. 48, 1925, Page 762.

[3]) Stodola: „Dampf- und Gasturbinen" 6th Ed., Page 207.

Digitized by Google

ζ_a represents the carry-over loss as a percentage of the adiabatic heat drops.

The internal efficiency in our case, as shown in the foregoing theoretical deduction, is the ratio of the heat equivalent of the internal power to the adiabatic heat drop between the conditions before the first guide wheel and the conditions immediately at the outlet from the last runner wheel.

This pressure was originally determined only by observations at two places in the casing (at shaft level). It appeared, however, advisable to extend these observations, also on account of the fact that frequently of late vacuum measurements have only been taken at the top of the exhaust branch, and that very little has been published up till now regarding the differences in pressure which occur in the exhaust steam branch. Therefore, the number of points of observation was increased to 18; the points were connected together by means of U-tubes and compared with vacuum columns joined to them so that the pressure differences and absolute pressures could be read off. From the pressure registered in the condenser during the trials, the pressure at each point, especially at the runner wheel outlet was obtained. As will be gathered from Fig. 13, the points of measuring 1, 2, 3, 4 and 8, were located in the upper half of the casing quite near to the outlet of the runner wheel, the points 5, 6, 7, 9 and 10 along the middle flange slightly above the shaft centre, point 18, half way between the shaft centre and the highest point of the casing, points 11 and 12 on the lower half of the casing, and points 13, 14, 15, 16 and 17 close to the condenser inlet flange. The observations gave the following results:

In order to determine the pressure at the runner wheel outlet from this, one must take into consideration the centrifugal velocity pressure head, which is obtained by estimating the change of direction and the speed of the steam flow. According to this we get:

For outputs of	8000 K.W.	10,500 K.W.
a) The absolute pressure at the runner wheel outlet by utilising for the upper half observation points 1, 2, 3, 4, 8 and for the lower half 11, 13, 17 and from this, the average obtained for the complete wheel .	1.164″ Hg.	1.625″ Hg.
b) The absolute pressure at the condenser as a simple average from 13, 14, 15, 16, 17	1.060″ Hg.	1.526″ Hg.
c) Pressure drop between the runner wheel outlet and the condenser . . .	0.104″ Hg.	0.098″ Hg.
d) Ditto calculated for the main test in proportion to the average velocity of flow squared and the volumetric weight	0.116″ Hg.	0.119″ Hg.
e) Calculated back-pressure existing at the runner wheel outlet in the main test (briefly designated as the vacuum at shaft level)	29.015″ Hg.	28.648″ Hg.

If the pressure observed in the upper half of the casing, viz., the corrected average of 1, 2, 3, 18 were employed for comparison, then far too great a pressure drop to the condenser would be obtained, and consequently the efficiency at full load would be about 1.6 % too large.

The average blade efficiency calculated in this manner does not, however, give the true state of affairs. Experience has shown, that wetness of the steam in the last stages possesses a far greater importance than was formerly supposed. English turbine designers base their calculations on the procedure of Baumann with a decrease of «hydraulic efficiency», that is the blade efficiency, of 1 % per 1 % wetness of the steam[4]) as against the value obtained under similar conditions with dry steam, according to the formula

$$\eta \text{ wet steam} = \eta \text{ dry steam } (1 - \text{wetness}).$$

Observation Point	1	2	3	4	5	6	7	8	9	10	11	12	13	14	15	16	17	18
At 10 500 KW output inches Hg abs	2.140	2.020	1.831	1 666	1.604	1.659	1.706	1.477	1.674	1.740	1 496	1.690	1.494	1.591	1.551	1.532	1.490	1.670
At 8000 KW output inches Hg abs	1.639	1.678	1.441	0.969	1.154	1.221	1.210	1.051	1.181	1.240	1.071	1.282	1.434	1.111	1.082	1.051	1.015	1.170

[4]) H. L. Guy "The economic value of increased steam pressure" "Engineering", Vol. No 122 (1926) Page 646. The remark, that with reheating a smaller influence of the wetness has been confirmed, does not apply to the present turbine, since the validity of the above method of calculation when applied to ordinary condensing turbines has been definitely substantiated by numerous tests. As H. L. Guy belongs to the Staff of the Metropolitan-Vickers Electr. Co., the statement refers obviously to impulse turbines, whilst with reaction turbines the conditions might be very much different. See also Mellanby and Kerr, "Engineering", Vol. 123 (1927), Page 120.

Digitized by Google

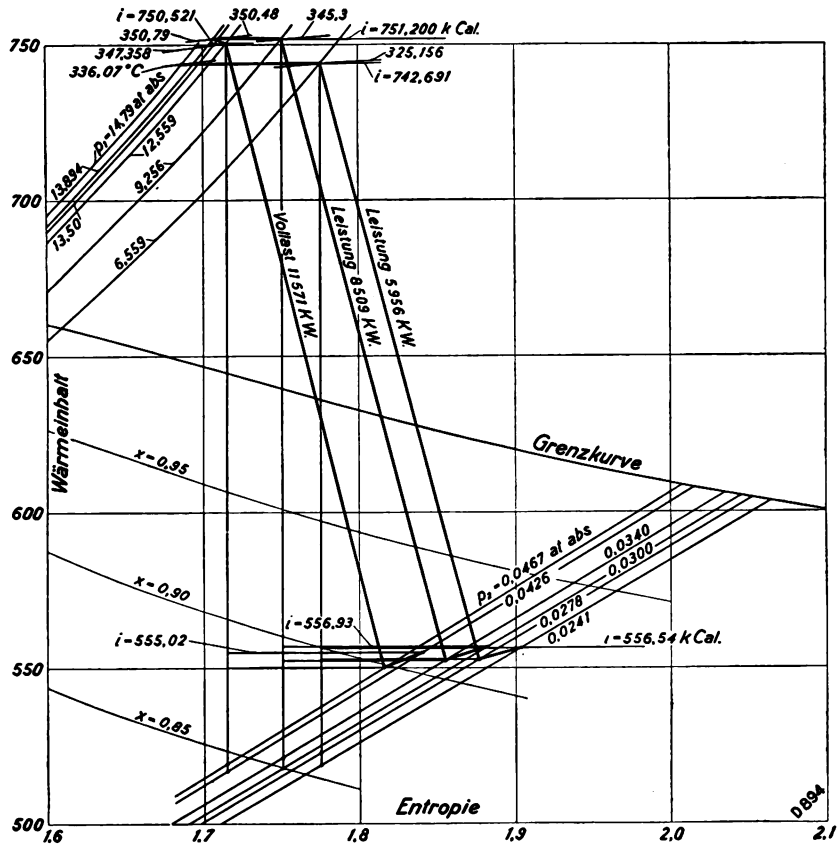

Fig. 12.*) Steam conditions of tests transferred to total heat-entropy diagram. Thermodynamic calculation of test results. *Wärmeinhalt = total heat; Vollast = full load; Leistung = output; Grenzkurve = saturation line; Entropie = entropy.*

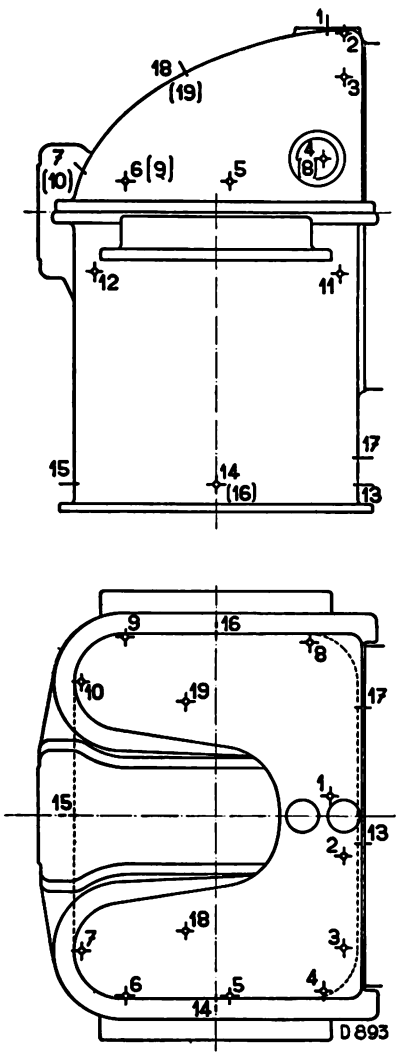

Fig. 13.
Positions of measuring points for vacuum.

By inspecting the Works' drawings of the turbine it was possible to determine the conditions prevailing at full load in this respect, and also the leakage losses of the individual stages and the disc friction. For the latter, in order not to give preference in any manner to the high-pressure portion, equation 6 has been used from page 166 of my manual with $L = 0$.

It is to be noted further, that the efficiency of the stages in the high-pressure portion must be smaller than that in the medium-pressure portion, since on the one hand the blades are very much shorter, whilst on the other hand on account of practical considerations the additional radial length of the runner blades over the length of the guide blades is the same throughout. As a result the windage of guide blade jets in the high-pressure portion is considerably greater; also the disturbance of the jets by the centrifugal force of the steam rotating in the clearances is greater in the high-pressure portion, where the steam is more dense than in the medium-pressure portion. An estimation making use of the tests on the windage of jets given in my manual, page 180, shows that the decrease in efficiency in the first stage of the high-pressure portion may easily amount to 2 % as compared with the efficiency of the 6 th. stage. The results of these detailed calculations are shown step by step in Fig. 14, the full line being based on 1 % loss and the dotted line on $^2/_3$ % loss per 1 % wetness. From other tests the leakage steam quantity from the high-pressure gland to the low-pressure gland was taken as being 0.8 % of the total steam quantity. The pure blade efficiency was secured from the total efficiency of the stages by deducting the leakage losses, the disc friction and windage. The best blade efficiency calculated in this manner was secured from the 6 th. stage, amounting to approximately 90 % with a blade length of 60 mm., operating with steam immediately before the saturation limit.

The most important conclusions from the test and their evaluation are given by the following figures:

*) From chart „Dampf- und Gasturbinen, 6th. edition.

Digitized by Google

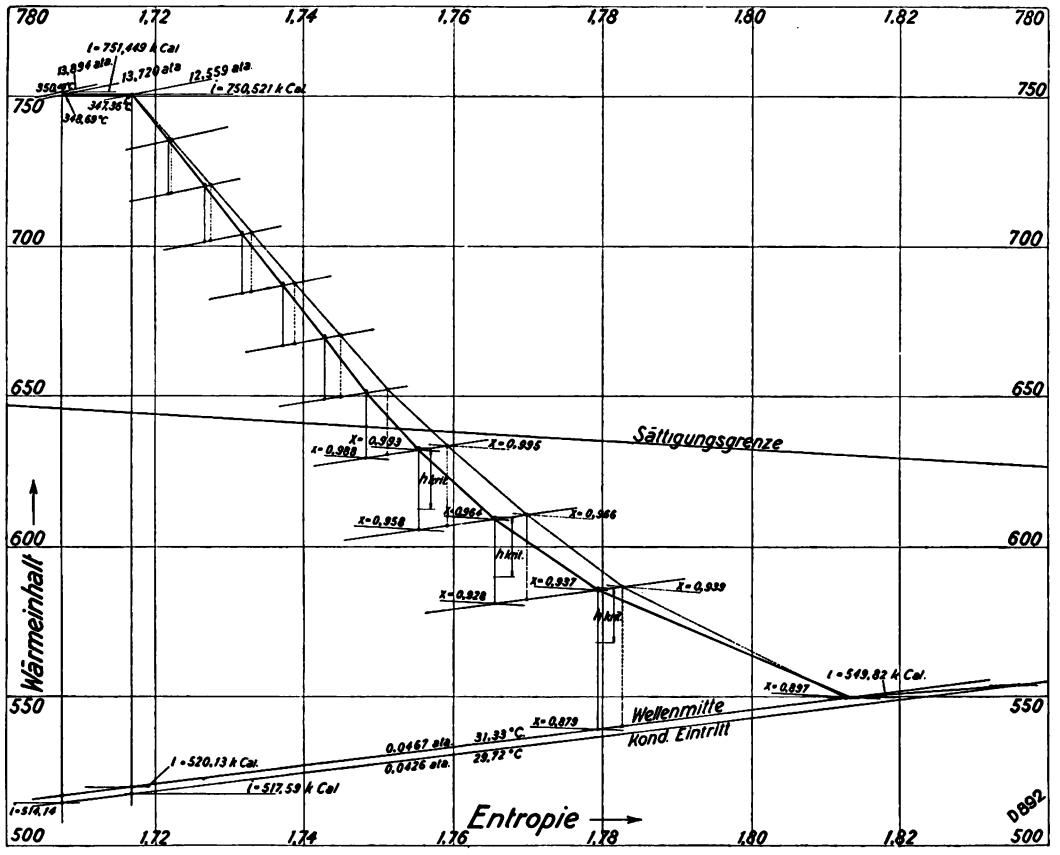

Fig. 14. The true steam conditions across the turbine for test No. 4 in the total heat-entropy diagram.
Wärmeinhalt = total heat; Sättigungsgrenze = saturation line; Entropie = entropy.

As thermodynamic efficiency, the full load test confirmed:

a) Calculated upon the output at the coupling and the conditions before the main stop valve and in the condenser . . . . 81.6 %

b) Calculated upon the internal output and the conditions before the first guide wheel and in the condenser . . . . . 83.9 %

c) Calculated upon the output at the coupling and the conditions before the first guide wheel and the vacuum immediately beyond the last runner wheel . . . . 84.0 %

d) Calculated upon the internal output and the conditions before the first guide wheel and beyond the last runner wheel 84.8 %

e) The average «blade efficiency» including disc friction, leakage losses and windage in the clearances amounted to . . . . 83.9 %

The highest blade efficiency secured under the most favourable operating conditions was with the blades of the 6 th. stage, approximately 2.4″ long, exclusive of disc friction and leakages, but without deduction for windage losses and amounted to . . . . . 90 %

These results for a single-casing turbine, as represented by the characteristic number

$$\frac{\Sigma u^2}{H_{ad}} = \frac{492\,900}{237.3} = 2077 \ \frac{m^2 kg}{sec^2 k\,cal}$$

are remarkable. or $= 12046 \ \frac{ft^2\,lbs}{sec^2 B.T.U.}$

The technical analysis gave important information regarding the performance of the latest impulse blading.

Summary:

From a ten-stage single-casing „Zoelly" turbine operating with approximately 11000 KW. at the alternator terminals, and with a steam pressure of approximately 200 lbs. per sq. inch absolute and a steam temperature of 662° F before the main steam stop valve, a thermodynamic efficiency of 84,8 % was obtained, based on the conditions before the first guide wheel, the carefully measured vacuum after the last runner wheel and the internal power. The average „blade efficiency", including disc friction, leakage and suction losses at the axial clearances between rotor and guide wheels amounted to 83,9 %; if the loss in efficiency in the low pressure portion due to the wetness of the steam is taken into account according to the generally adopted method, then a pure blade efficiency of 90 % was secured for the 6th high pressure stage, after deduction for disc friction and leakage losses.

Digitized by Google

Efficiencies of Steam Turbines.

In the double number No. 6 Sept./Oct. 1927 of the «BBC Review», Messrs. Brown Boveri & Co. of Mannheim under the heading of «Efficiencies of Steam Turbines» endeavour to prove that we are misleading prospective clients for steam turbines with our leaflet on the tests made at Wehrden by Professor Dr. A. Stodola. The following statements are made:

1. That the efficiency referred to the conditions before the first guide wheel is quite useless for the customer. The efficiency must be based on the conditions before the main stop valve, regarding which no mention is made.
2. That our leaflet regarding the Wehrden turbine mentions efficiencies of 84.1 and 85.7 per cent, whilst in reality only 81.6 per cent was reached. The corresponding efficiency of the BBC Bielefeld turbine is declared to be 83.5 per cent.
3. That there is practically no difference between the pressure half way between the shaft and highest point of the exhaust branch and that prevailing in the condenser, since the value measured by Professor Josse in Bielefeld amounted to only 0.01704 lb./sq. in.
4. That we tried to create the impression that the single-casing Wehrden turbine is better than the three-casing BBC turbine in Bielefeld, whilst in reality the Bielefeld turbine has the better efficiencies.
5. Remarks are also made regarding the advantages in service of the multi-casing turbine over the single-casing turbine. In reply to these statements

we have to make the following observations:

Point 1. The efficiencies published by us in the above-mentioned leaflet are those given in the report of Professor Dr. A. Stodola on the Wehrden tests. In order to make it clear to everybody concerned which efficiencies are meant, we especially referred to this report published in the «Zeitschrift des Vereins Deutscher Ingenieure» (Journal of the Association of German Engineers) and reproduced verbatim in the preceeding article. The purpose of mentioning the two efficiencies was chiefly to give every expert and purchaser of steam turbines an idea of the importance of measuring the pressure at the outlet of the turbine, which measurement always has a determining influence on the efficiency. Moreover Professor Dr. A. Stodola determined the efficiency of a BBC turbine according to the same method, see report in the «Zeitschrift des Vereins Deutscher Ingenieure» No. 37, 1925. We cannot accept Messrs. Brown Boveri & Co.'s reproof that the efficiency stated in our leaflet is of no use to the purchaser. The comparison of the steam consumption secured with the guaranteed steam consumption under the prescribed steam conditions at the turbine inlet, cooling water conditions and generator efficiency is the standard method of comparison. That the steam consumption guaranteed by us for Wehrden, which was the same as that guaranteed by the competing firms, was not only reached, but even surpassed, is borne out by the tests.

Point 2. Our efficiency of 81.6 per cent cannot be compared with that of 83.5 per cent of the steam turbine supplied by BBC to Bielefeld, because our efficiency refers to the vacuum in the condenser, whilst the BBC value refers to the vacuum in the top of the exhaust branch.

Point 3. The vacuum measurements made by Stodola in Wehrden at 18 different points, which work occupied a fortnight, prove that at steam velocities of approximately 265 ft. per second, even with a good vacuum, the pressure drop in the exhaust steam casing is very much higher than the value of 0.017 lb./sq. in. mentioned by BBC, especially in the upper part of the exhaust steam branch. Professor Josse's report shows us that his measurements on the BBC turbine were made precisely in the upper

Digitized by Google

part of the exhaust steam branch, as other data regarding the vacuum measurements are not given. On the other hand, the very elaborate measurements of Stodola have proved beyond question that such small mean pressure differences as indicated by BBC are impossible. In this connection we refer to Stodola's article in the «Zeitschrift des Vereins Deutscher Ingenieure» No. 22, 1927. As far as may be gathered from the longitudinal section of the Bielefeld turbine published in the «Zeitschrift des Vereins Deutscher Ingenieure» No. 13, 1927, and the data of the wheel diameters, the exhaust steam velocity during the full load test amounted to at least 265 ft. per sec. with a considerably inferior vacuum than at Wehrden.

Point 4. If we recalculate the Wehrden efficiency referring to the conditions before the main stop valve and in the condenser, for the vacuum prevailing in the middle of the exhaust steam branch upper part (measuring point No. 3, Fig. 13, of the preceeding publication), it rises to 84.4 per cent and for the highest point (point No. 1) to even 86.6 per cent. A comparison of the Bielefeld and Wehrden results, the latter referring to the vacuum point No. 3, gives the following results:

			BBC Bielefeld	EWC Wehrden
1.	Rated output . .	KW	10000	10500
2.	Output during test	»	10886	10975
3.	Pressure before main stop valve .	lbs./sq. in.	176.5	197.2
4.	Temperature before main stop valve .	° Fahr.	615	663
5.	Pressure before 1st. guide wheel .	lbs./sq. in.	175.2	178.4
6.	Vacuum in top of exhaust steam branch	inches Hg (Baro. 30 ″ Hg)	27.38	28.40
7.	Adiabatic heat drop	B. T. U.	759	849
8.	Thermodynamic efficiency	%	83.55	84.4

Without entering into details, the elaborate investigations of Stodola prove that the internal efficiency of the Zoelly turbine at Wehrden, even when referring to the less favourable vacuum conditions in our case is still superior to the internal efficiency of the Bielefeld turbine recorded by Prof. Josse. As the internal efficiency is the main criterion of the quality of the blading, the superiority of the Zoelly blading is therewith established, and likewise the superiority of the Zoelly turbine, since the tests proved that the mechanical losses of the latter are smaller than those of the Bielefeld turbine.

Point 5. Regarding an opinion on the advantages in service of multi-casing turbines over single-casing turbines, we would refer the reader to the engineers in charge of steam power stations.

BBC finally mention the results obtained with their turbines at Copenhagen, Schiehaven and Zschornewitz. We are not able to check the efficiencies given by BBC for the first Copenhagen turbine nor the Schiehaven turbine. However we are informed on the test results of the 30 000 KW BBC turbine at Zschornewitz through the «BBC Review» published in Baden (Switzerland). The efficiency of 86.43 per cent mentioned by BBC has not been measured, but simply e s t i m a t e d, and may not be employed for such comparisons. We would point out that the full load efficiency ascertained during these tests according to BBC's statements amounts to 83.7 per cent in the one instance and to 84.9 per cent in the other under almost similar steam conditions. The tests were made without bleeding steam for preheating the feed water, which resulted in the fact that the low-pressure end had to operate with a 7 per cent larger quantity of steam, than it was designed for. Tests made on this machine with other steam quantities do not justify an addition of 1.8 per cent being made to the efficiency of 83.7 per cent and 84.9 per cent ascertained at full load to compensate the fact that no steam was bled. On the contrary, they prove that this addition is quite arbitrary and unfounded. The same holds for the second Copenhagen machine on which the tests were made in May 1927.

Digitized by Google

The Board and Paper Mills of Dr. Cicero da Silva Prado in Fazenda Corruputuba (Brazil)

By J. F. Clerc, Engineer.

During the last decades, and more particularly since the end of the war, there has been a marked tendency in the various overseas countries to become economically as independent as possible. For their supply of paper, most of these countries had to rely upon imports from Europe until it was generally recognised that also paper need not to be imported, but could be manufactured on site from imported pulp or from indigenous raw material.

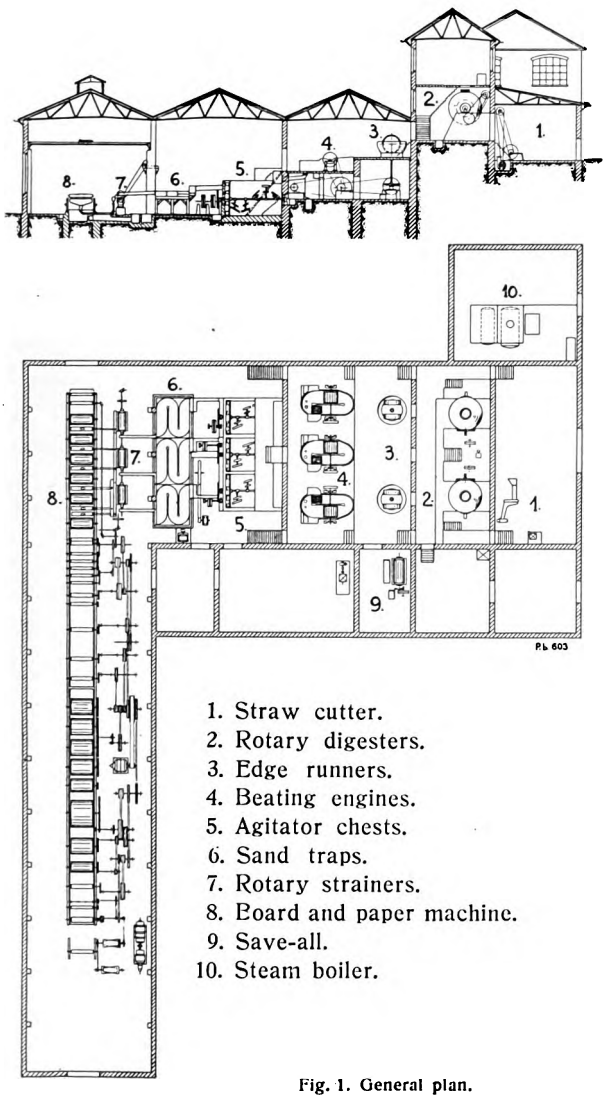

Fig. 1. General plan.

Fig. 2. Rice harvest in Brazil.

Such a raw material, available in the greater part of the tropics, is rice or paddy straw. Usually it is burned in the fields after harvesting, the ashes thus fertilizing the soil again. It has found an industrial use in a few countries only; in Japan, for instance, large quantities are required for the manufacture of the mats used for the floors; in the Dutch East Indies it is burned to ashes, from which the native Batik-Industry obtains potash solutions. Both are, however, local methods only, while the manufacture of paper or board is likely to be of general interest. A plant, producing about 8 tons of board daily from paddy straw is described in the following article. It was built by Dr. Cicero da Silva Prado as extension to a small board factory operated in connection with his extensive rice plantations.

The plant, entirely designed and equipped by Escher Wyss & Co., consists of four departments:

Pulping Department,
Paper and Board machine,
Boiler house,
Hydroelectric plant.

Digitized by Google

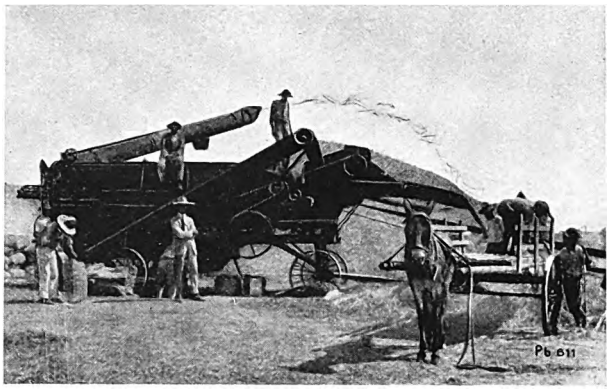

Fig. 3. Threshing the rice.

The first three together form the Corruputuba mills, which are connected by a 12-mile transmission line with the water power plant.

As shown in Fig. 1, the factory has been built along a steep gradient in such a manner that during the manufacturing process the stock can gravitate from one room to the next. Any handling of the pulp by means of pumps is avoided; the cut straw only is mechanically conveyed to the digester charging floor by means of a special fan.

Native labourers harvest the rice in the fields, Fig. 2, bring it to the rice mills for thresing, Fig. 3, and carry the baled straw to the paper and board mill, Fig. 4. There it is cut, then cooked with lime-milk in two spherical digesters of 10 diam, each one containing a charge of about 4000 lbs. A washing takes place on the perforated draining floor underneath the digester, then the material is pushed on and falls directly into the edge runners or kollergangs, situated on the next lower floor.

These edge runners are of a type built especially for the treatment of grasses and similar raw materials, they have very high vats of spherical shape and the usual scrapers are omitted, because these latter have a tendency to tear the grass around. Yet without scrapers a very thorough mixing is obtained, because during operation the material rises along the side of the vat and falls back to the bottom in front of the runner stones.

The final disintegration takes place in three 620 lbs. beaters, again located on a floor below the level of the edge runners. Here also the addition of size and colours is effected, then the finished pulp is dumped into three agitator chests. Each one is provided with a dipper wheel of 10' diameter which lifts the stock up into the channels leading to the sand traps, strainers and to the board machine. An elevation of the board machine is shown in Fig. 5. Each of the six cylinder moulds takes up a layer of pulp these layers are couched together to form the final web.

The plant contains three units of beaters, stock chests, sand traps and strainers, which can be operated either together or separately with different

Fig. 4. Transport of straw to the board mill.

kinds of pulp. Thus the following combinations may be obtained:

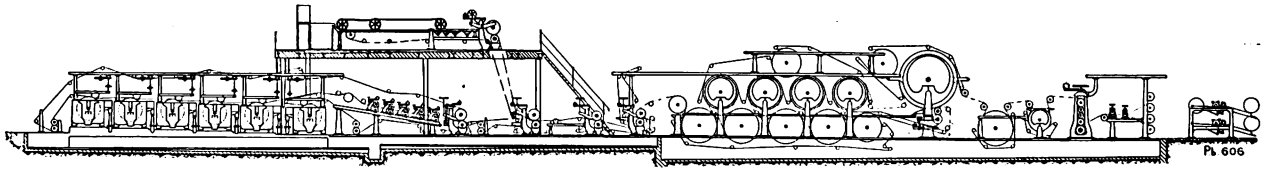

Fig. 5. View of the board-making machine for a trimmed width of 72".

Digitized by Google

If the first, or the first and the last mould are fed with better pulp instead of straw pulp, a board with one or two better outside layers is produced. These so-called duplex or triplex boards are mostly used for the manufacture of boxes and of railroad tickets. The inside layers generally consist of straw pulp, the outside layers of white or conveniently coloured stock from waste paper or sulphite pulp.

If the very best appearance must be obtained, the board is built up of four layers of straw pulp, a fifth of stock from waste paper and a top layer of white very high-grade pulp. Thus the fourth white layer of cheaper stock makes it impossible for the dark colour of the straw pulp to appear through the very thin top layer. Before flowing to the cylinder moulds, the stock is screened in three «Tremor» strainers with drums of 27½″ diameter and 64″ length. The width of the slots is 0.05″ for the inside and 0.03″ for the outside layers. These strainers are equipped with a vibrating mechanism consisting of purely rotary parts running absolutely silent. There are no cams, levers, connecting rods or journals subject to reciprocating motions and consequently the «Tremor» strainer is distinguished by extremely little wear and safe, reliable working.

The six moulds are seen in Fig. 6; they are located in vats with cast-iron end shields and galvanized bottoms; the take-up rolls are provided with lever arrangements acting either as discharging, or as pressure device, according to the position of a fulcrum pin, which can easily be displaced by hand. This device is of particular use, when boards having a tendency to be crushed, are manufactured.

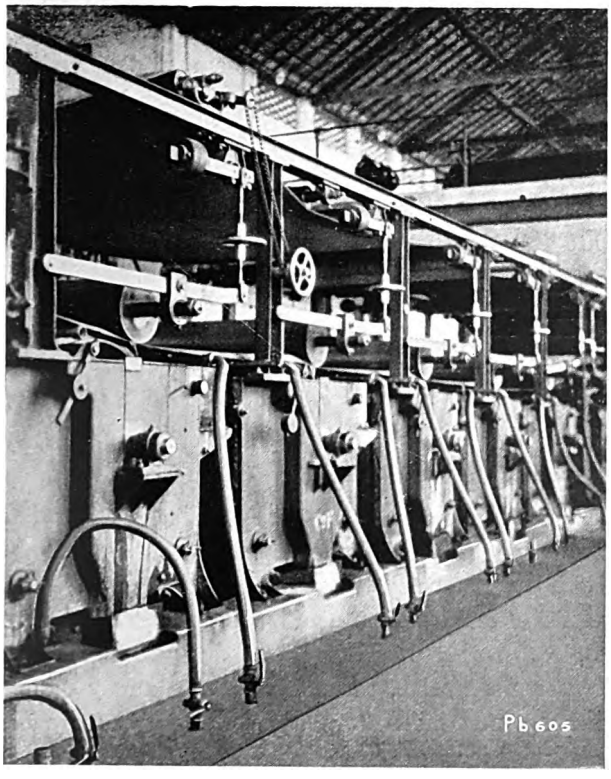

Fig. 6. Moulds of the board machine.

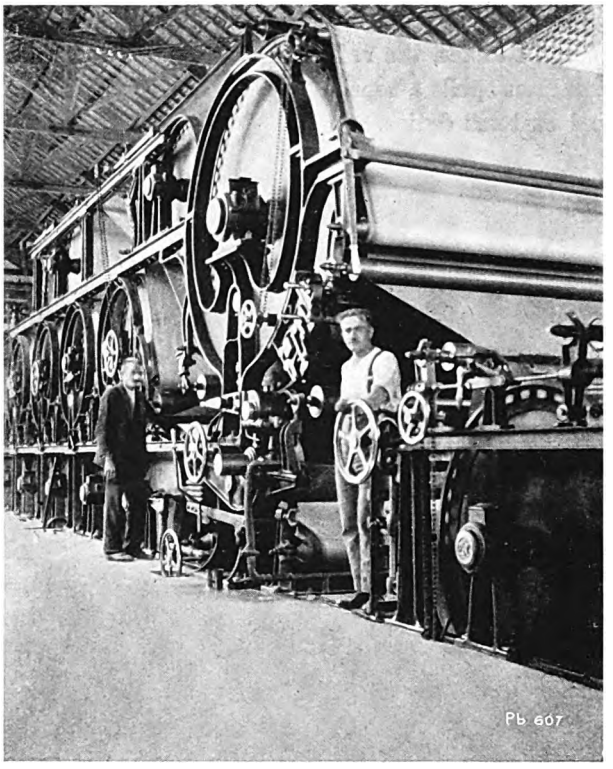

Fig. 7. Drying part of the board machine, with press for one-sided glazing.

The moulds are followed by a vacuum roll of 16″ diameter, the vacuum chamber of which is connected to an ejector fed by a standard centrifugal pump with white water. Such a combination of pump and ejector will give a higher and steadier vacuum than a plunger pump, yet it takes up less space and costs less for upkeep. These devices were originally used in connection with the condensers of steam turbine plants and Escher Wyss succeeded in applying them with very good results to the suction-rolls and boxes of paper and board machines. Through three pairs of 10″ baby presses the web is then passed on to two straight and one reversed wet press, all equipped with rubber-covered bottom rolls and top rolls of granite-stone.

The drying part, Fig. 7, consists of one battery with eight 5′ dryers. The lower dryers stand directly on the floor rail, special frames being provided only for the upper ones. Due to this design, the machine is very low and all parts are easily accessible, a

Digitized by Google

fact which is very much appreciated by the operators. Besides, the reduction in weight for overseas machines spells a considerable saving in freight costs and customs duties.

At the end of the drying part a 8½′ dryer with a press for machine-glazing is provided. The board then passes around a 40″ cooling cylinder and through a calender with 7 rolls of chilled iron. A drawing press with cast-iron rolls of 8½″ then carries the board through a cutter, trimming it and cutting it in the middle. Both webs can then either be wound up on the upright reel, or cut into sheets of any size by means of a duplex cutter arranged at the end of the machine.

The board machine is driven by means of a variable-speed d. c. motor of 12 to 54 HP. and 100 to 1355 R. P. M. and a shafting fully equipped with babbitted ring-oiled bearings, couplings, draw adjusting devices, protection railings etc. A constant speed shaft with 30 HP. motor is provided for the drive of pumps and strainers, a further 20 HP. motor is installed for the three agitator chests.

The drying part was based on a dailly production of about 8 tons and in order to avoid warping of the heavier boards an ample drying surface was installed. With a trimmed width of 71″ and a board

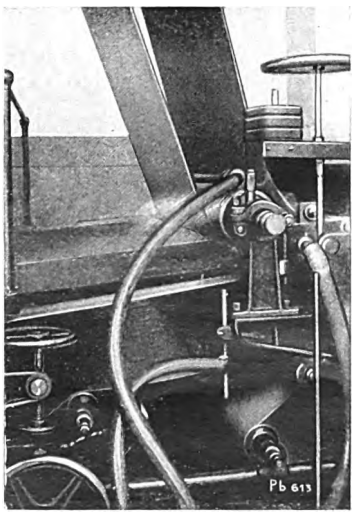

Fig. 8. Transfer of paper from upper wire to the 1st felt.

of 110 lbs *) the nominal output is attained at a working speed of about 22′ per min.; for 165 lbs *) at about 80′. The motor, however, is powerful enough to obtain speeds of up to 135′, so that it will suffice to meet future requirements should the capacity of the machine be increased later on.

*) Weight per 500 sheets of 27½″ by 40″ (700×1000 m/m); equivalent metrical weights 1000 and 150 gr/sqm respectively.

Fig. 9. Garbe boiler during erection.

When the board machine was ready for shipping our customer asked us to study a proposal for an additional device permitting also efficiently to manufacture thin papers. The problem was solved by installing a Fourdrinier wire on a floor built above the cylinder moulds. As shown in Fig. 5, the wire is extended downwards to the first press, where the web of paper is transferred to the felt as shown in Fig. 8. It is then carried through the rest of the machine and dried in the usual way.

This interesting device works very satisfactorily; it has permitted to considerably extend the range of manufacturing possibilities and also to meet many demands of the paper market.

The steam for drying the paper is raised in an Escher Wyss boiler of the Garbe type, of 1300 sq. ft. heating surface with a 365 sq. ft. superheater, Fig. 9. It is equipped with a mechanical «Pluto» grate for burning Brazilian lignite and produces 5300—6400 lbs. of steam per hour. In view of the future installation of a steam turbine, the boiler is very amply dimensioned and built for a working pressure of 196 lbs/sq. in.

Digitized by Google

The hydroelectric station, Fig. 10, supplying the power for the mill contains a 625 HP. Pelton-turbine with automatic control of the needle and with double

Fig. 10. Hydroelectric station with pipeline.

regulation; the head is 1045′ and the available water volume about 4.2 gals/sec. The turbine, as well as the pipeline were supplied by Escher Wyss.

The complete plant, Fig. 11, was started up about 6 months ago and has since been working uninterruptedly to the full satisfaction of its owner.

Finally it may be mentioned that the above described method is not the only one for treating rice straw; it can, under certain conditions, be equally well transformed into bleached pulp or paper. This has for instance been done in one of the most modern

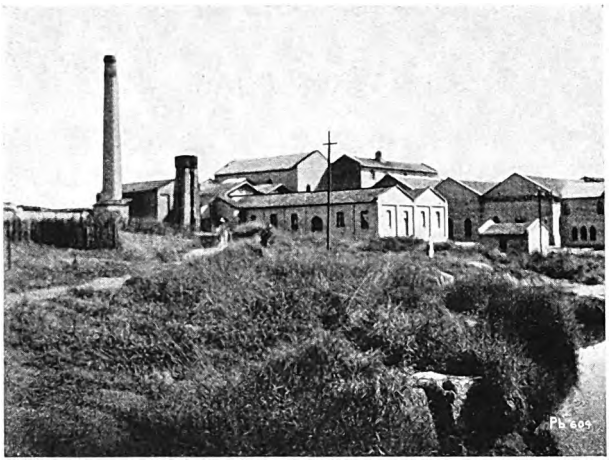

Fig. 11. View of the paper and board mill.

oversea mills, the Padalarang Paper Mills at Java, which turns out about 10 tons of high-grade rice straw paper daily. This plant too is completely equipped with Escher Wyss machines. Numerous other tropical grasses and canes, bamboo etc. form very suitable raw materials for paper making, and it is to be expected that the next years will see the development of a number of new plants for this purpose.

Digitized by Google

New Publications:

Steam Turbine Department.

1888 D Leistungsversuche an einer 11,000 KW Zoelly-Dampfturbine von Prof. Dr. A. Stodola, Zürich.

1939 D Essais de puissance d'une turbine à vapeur Zoelly de 11,000 KW par le Prof. Dr. A. Stodola, Zurich.

1945 D Performance trial of a 11,000 KW «Zoelly» steam turbine by Prof. Dr. A. Stodola, Zurich.

1908 D Getriebedampfturbinen für hohe und höchste Drücke. (Geared steam turbines for high pressures).

Gear Department.

1946 Ge. Geschwindigkeitswechselgetriebe.

1947 Ge. Changement de vitesse.

1948 Ge. Variable speed gear.

Refrigerating Machinery Department.

1860 E Reprint: Leistungsproben an einigen Kleinkältemaschinen «Autofrigor» by Prof. P. Ostertag. (Performance trials of small refrigerators «Autofrigor».)

Locomotive Turbine Department.

1949 L Erweiterung des nutzbaren Dampfgefälles bei Dampflokomotiven (Increasing the useful steam drop in steam locomotives.)

Paper Machinery Department.

1877 PB Stoffbereitungsmaschinen für Papierfabrikation.

1900 PB Pulp-preparing machinery for paper and board mills.

1918 PB Macchine per la preparazione delle paste nelle cartiere.

1970 PB Machines pour la préparation de la pâte à papier.

1933 PB Prospekt über Holzschleifereimaschinen (Pamphlet on wood pulp grinding machinery).

1950 PB Paper, board and pulp mills for overseas.

Turbo-pump Department.

1862 TP Das Kraftwerk Tremorgio (The Tremorgio Power Station).

1968 TP Speicherpumpenanlagen (Water storage pump plants).

1969 TP Hydraulische Hochspeicherkraftwerke (Hydraulic storage power stations).

Water Turbine Department.

1926 W Kugelschieber.

1927 W Vannes rotatives.

1928 W Rotary valves.

1932 W Turbines hydrauliques modèle fermé (Références).
Water turbines enclosed type (References).

1934 W Propeller- und Kaplanturbinen (Propeller and Kaplan turbines).

1942 W Turbines hydrauliques modèle ouvert (Références).
Water turbines open type (References).

1951 W Das Kraftwerk Eglisau (The Eglisau Power Station).

1955 W Rohrleitungskatalog (Pipeline catalogue).

Publishers: Escher Wyss & Co., Zurich (Switzerland).
Printed by: Siegfried & Co., Zurich (Switzerland).

London Office: Escher Wyss & Co., 20 Grosvenor Gardens, Westminster, London S. W. 1.

Tokyo Office: Escher Wyss & Co., Marunouchi Building, Room 322, Tokyo.

Digitized by Google

ESCHER WYSS NEWS

Volume I

2

March 1928

Published by Escher Wyss & Co. S. A.

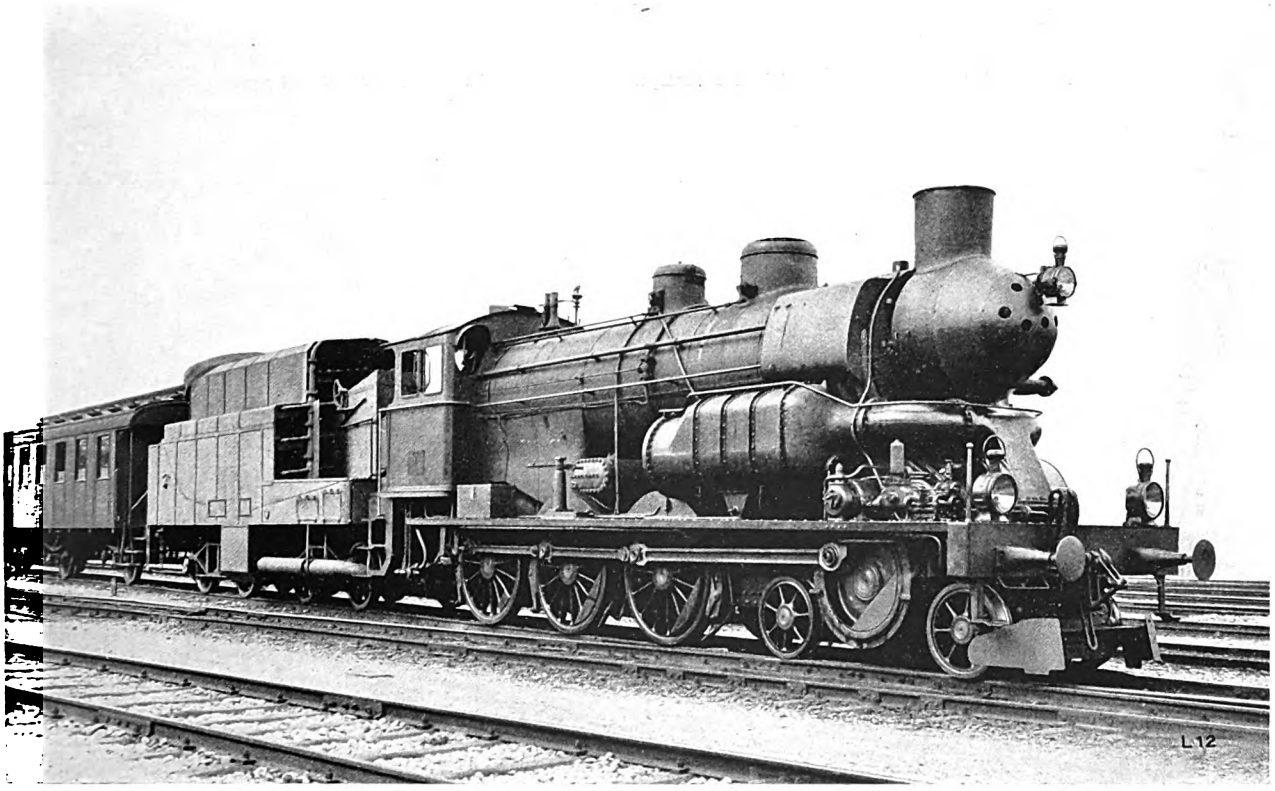

Zoelly Experimental Turbo-Locomotive

Contents

	Page
1. Interesting new turbine constructions and reconstructions	35
2. Cavitation phenomena in water turbines	40
3. Economic considerations regarding different power storage possibilities	45
4. Autovapor plant for the concentration of tobacco liquid supplied to the Italian Tobacco Monopoly	49
5. The Zoelly steam turbo-locomotive	51
6. Miscellaneous	59

AGENTS FOR UNITED STATES
THE NATIONAL POWER MACHINERY CORP.
2912 CHANIN BLDG., NEW YORK

Digitized by Google

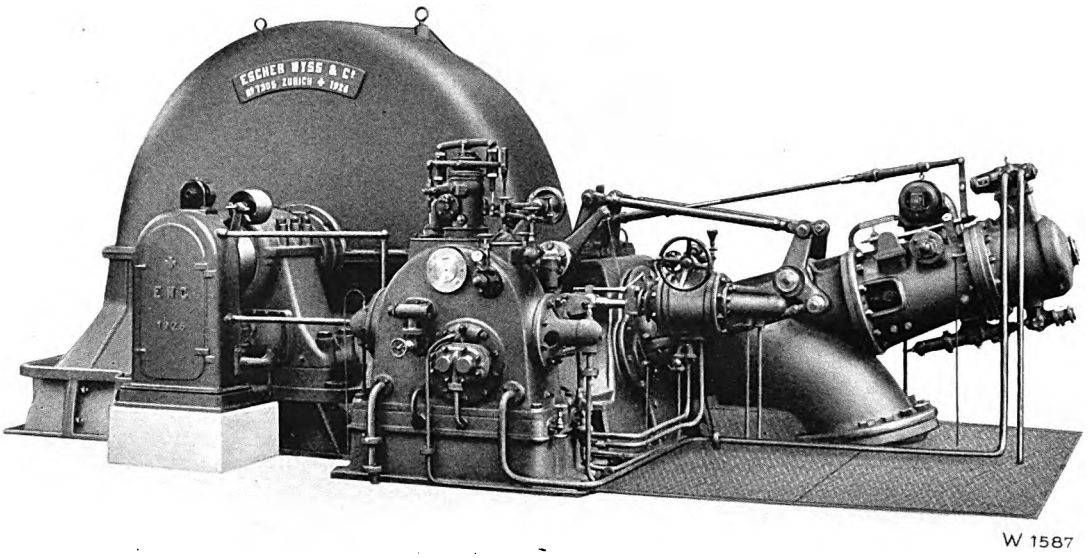

Pelton turbine of 19800 HP output for the Vernayaz Power Station of the Swiss Federal Railways.

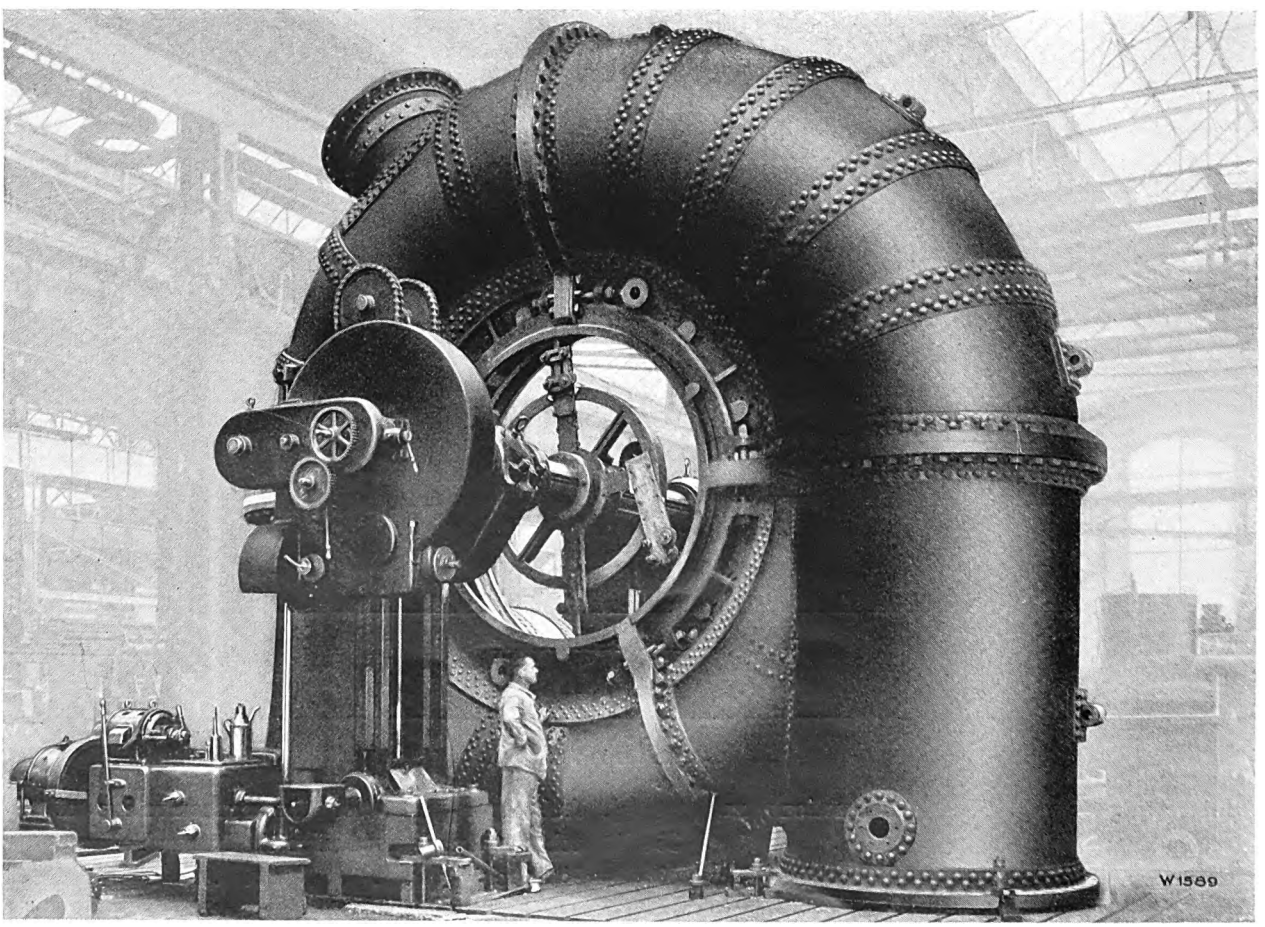

Spiral casing of the 38500 HP Francis turbine for the Kanidera Power Station, Japan.

Digitized by Google

ESCHER WYSS NEWS

PUBLISHED BY MESSRS. ESCHER WYSS & Co. S. A.

VOLUME 1 | No. 2 | MARCH 1928

The „Escher Wyss News" will be published periodically in bi-monthly issues. Reprinting of articles or illustrations appearing therein will only be permitted when source thereof is duly acknowledged. Single numbers 1/-; one year's subscription 5/-.

Interesting new turbine constructions and reconstructions.

By E. Seitz.

The economic depression prevailing in Europe for many years enforces the utmost economy in all parts of a water power plant, be it in the lay-out of a new plant or the extension of an existing plant.

Both the structural and mechanical parts of such plants must be designed and executed with a view to obtaining the maximum utilization of the water power possible with the present day's standing of technics.

These conditions, backed up by the very keen competition observable in all fields, have confronted the designer with completely new problems. Tradition had to be thrown over board and new paths had to be discovered and followed in order to satisfy the increased requirements.

As a matter of fact, problems have been solved within the last few years, which erstwhile would have offered insuperable difficulties. Highest velocity combined with maximum efficiency and minimum space requirement was aimed at. Incessant laboratory work, careful design and improved workshop methods were essential for final success.

With old plants the object in view is to either reconstruct the existing turbines, or even only to substitute new runner wheels of modern design for the existing ones and thus raise the efficiency of such reconstructed turbines to the level of that of modern new turbines. It must be admitted, however, that in most cases it is either quite impossible, or possible only in a limited measure, with the improvement of the efficiency to simultaneously attain any considerable increase of the speed. Mostly the electric generator is retained in its original design in such reconstruction work, or at the most is rewound to somewhat increase its output, but its speed remains the same.

The following lines describe a few plants and prove what may be achieved with such new constructions and reconstructions.

In the power station Vemork of the A.S. Rjukanfos, Oslo, which supplies the electric current for the celebrated atmospheric nitrogen works, 11 Pelton turbines each with two runner wheels and four nozzles and each designed for an output of 15 000 HP under a head of 918 ft. at 250 r. p. m. had been erected in former years. The increased demands for energy necessitated the erection of a further unit. However, the available floor space proved too small for a Pelton turbine, the more so as the new unit was to have a larger output than the existing turbines.

It was, therefore, decided to erect a vertical shaft high-speed Francis turbine, which would offer the following advantages:

1. High speed.
2. Minimum space.
3. Low purchase costs.
4. Utilization of the whole head (the head between turbine centre line and tail-race level being utilised in a draught tube).
5. High efficiency.

The Company stipulated that this turbine should have a rated output of 17 500 HP at 600 r. p. m. under a net head of from 918 to 950 ft. (specific speed $n_s \sim 69.2$). As the service conditions require the turbine to run with an almost constant load of from 14 000 to 16 000 HP, our aim was to obtain the best efficencies within these limits of output. On the strength of many years of experience in the construction of vertical shaft Francis turbines we guaranteed the high figure of 90 per cent for the maximum efficiency.

As far as we are aware, the head of 918 to 950 ft. is a record for Francis turbines.

The water velocities rise to such high values in the turbine, that special care had to be taken to avoid vacua and cavitation, as otherwise corrosion would

AGENTS FOR UNITED STATES
THE NATIONAL POWER MACHINERY CORP.
2912 CHANIN BLDG., NEW YORK
Digitized by Google

have had to be feared. Figs. 1, 2 and 3 illustrate the lay-out and design. *)

The unit was put into service at the end of 1926. The turbine runs quite steadily and the governing gear operates irreproachably.

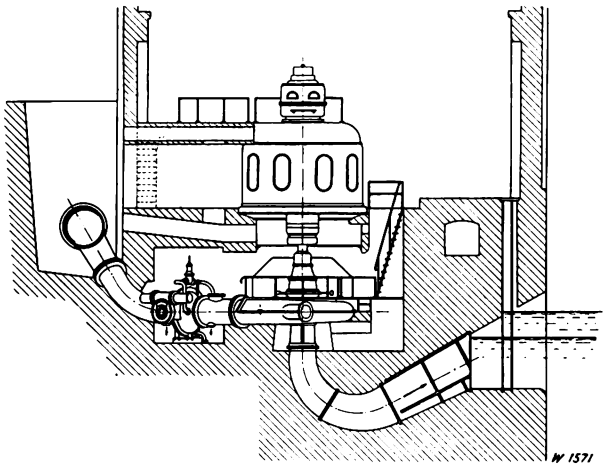

Fig. 1. Vemork Power Station. Elevation of the 17500 HP Francis turbine, 600 r. p. m.; head 950 ft.

In May 1927 the official acceptance tests were made with the new turbine. All measurements in connection with these tests were carried out in accordance with the «Rules for acceptance tests of hydraulic machinery», published by the Verein Deutscher Ingenieure (Association of German Engineers) in 1926. The water volume was determined by propeller measurements in the piping, whereby the water velocities were ascertained in the same measuring section over two diameters perpendicular to each other. A measuring equipment designed by Mr. Gjestland, manager of the A. S. Rjukanfos, was employed for the measurements. A displaceable propeller rod, supported in a cylindrical joint, and permitting of the quick adjustment of the propeller to any desired point of the measuring section, is an important item of this equipment, which proved very satisfactory.

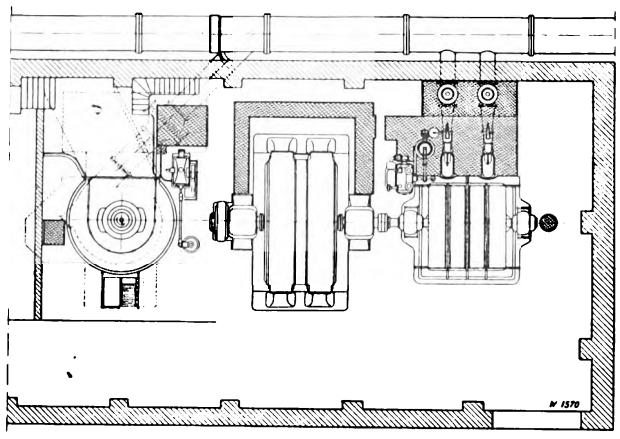

Fig. 2. Vemork Power Station. Plan of the 17500 HP Francis turbine, 600 r. p m. and of a 15000 HP Pelton turbine, 250 r. p. m.
Note the extraordinary difference between the dimensions of the old and new units.

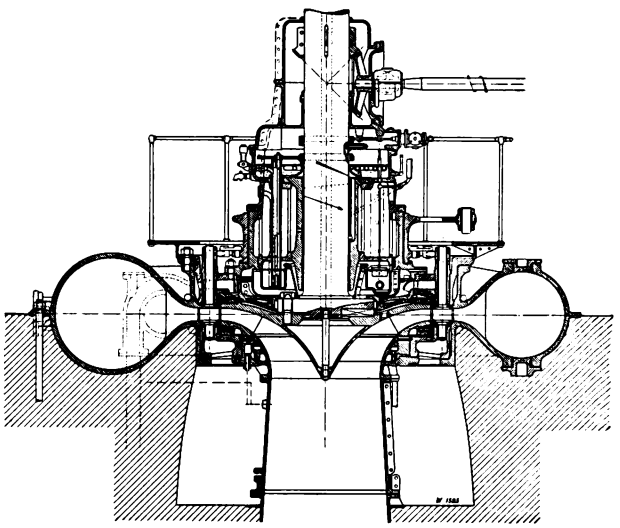

Fig. 3. Vemork Power Station. Sectional elevation of the 17500 HP turbine, 600 r. p. m.; head 950 ft.

The results of these tests are shown in the graph, Fig. 4. The guaranteed values were not only reached but even surpassed. The maximum efficiency measured at an output of approx. 16 000 HP was 91.4 per cent.

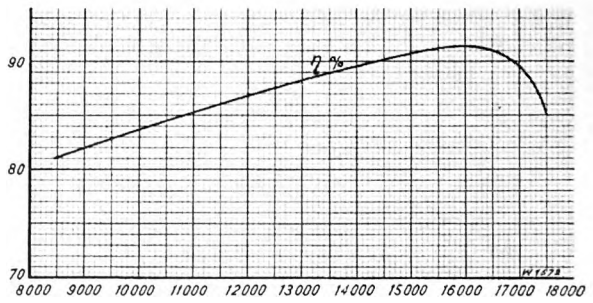

Fig. 4. Results of the official acceptance tests.
Turbine output N_e in HP.
Turbine efficiency η in per cent.

The turbine has now done excellent service for one year and thus given practical proof that when clean water is available the vertical shaft high-speed Francis turbine is well able to oust the Pelton turbine under heads of up to 980 ft. in all cases where high efficiencies at heavy loads are required, the efficiencies at partial loads being of secondary importance. Best guidance of the water, irreproachable machining of all parts, and carefully designed sealing of the clearance are fundamental

*) See also J. Moser: „Neue Wasserturbinen-Anlagen". Schweiz. Techn. Zeitschrift Nr. 31/35, 1926.

Digitized by Google

conditions for the attainment of good results. Further investigations, which have been made in the meantime, open up prospects that the head of 980 ft. mentioned above will be surpassed in the near future if the suction head and speed are suitably chosen.

As counterpart of this high-pressure Francis turbine we will now describe the new 2900 HP Pelton high-speed turbine of the Burglauenen Power Station owned by the Jungfrau Railway Company.

Contrary to the Vemork plant, this works operates with the worst water imaginable, its sand content being so great that in view of the unavoilable wear, a Francis turbine could not be considered.

In 1907 four turbines, each for an output of 1250 HP at 400 r. p. m. under a head of 500 ft., were installed in the Burglauenen station. The new two-nozzle turbine was designed for an output of 2900 HP at 500 r. p. m. under a head of 525 ft. (specific speed

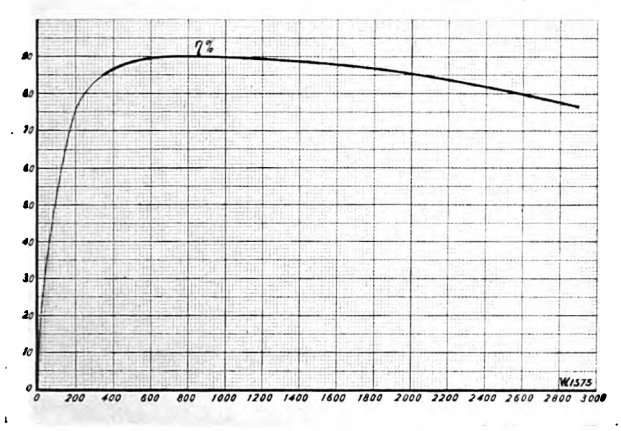

Fig. 5. Results of the official acceptance tests.
Turbine output N_e in HP.
Turbine efficiency η in per cent.

n_s per nozzle = 33.4, n_s of the turbine approx. 47.3). This exceptionally high speed for a Pelton wheel could be proposed on the strength of results obtained with extensive tests made with a model.

The results of the official acceptance tests of September 26 th and 27 th 1926 given above, Fig. 5, prove that the choice of the design for the quite unusual conditions mentioned in the order has been crowned with complete success. As this plant in the main serves to supply current for electric traction and the turbines, therefore, often have to run at partial loads, it was essential to obtain as high an efficiency as possible precisely at these light loads. Fig. 6 and 7 illustrate the design of the new turbine. [1]) A special feature is the exceedingly compact design of the casing. In spite of the high sand content of the water, the working results of this machine are very favourable, the wear of the nozzles and buckets being amazingly small.

As an example of the rational utilization of a low-pressure plant we would mention the Donaustetten Power Station near Ulm. In this new

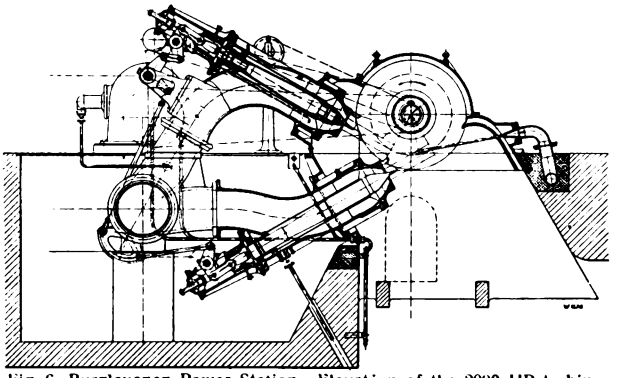

Fig. 6. Burglauenen Power Station. Elevation of the 2900 HP turbine, 500 r. p. m.

plant, executed by the Administration of the Ulm Municipal Tramways and Electricity Works, two Escher Wyss Kaplan turbines have been erected, designed for the following data:

H = 24 ft. Q = 4777 gals./sec. n = 214 r. p. m.
H = 25 ft. Q = 4933 gals./sec. n = 214 r. p. m.

H = head; Q = water volume; n = speed.

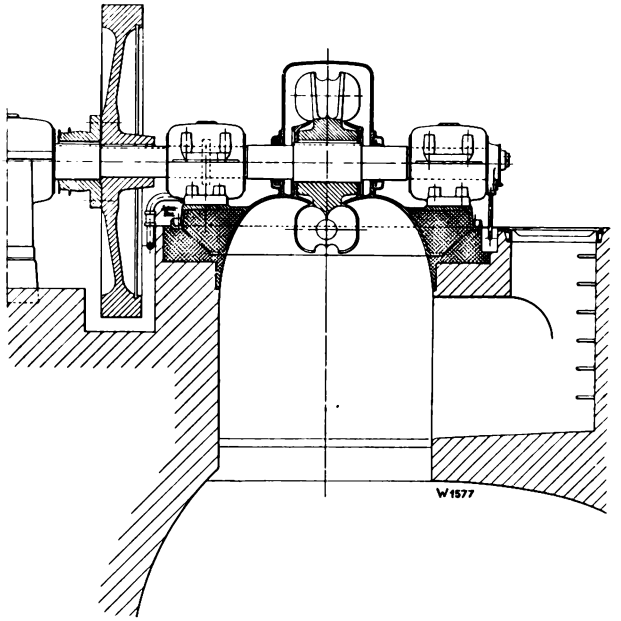

Fig. 7. Burglauenen Power Station. Sectional elevation of the 2900 HP turbine, 500 r. p. m.

The specific speed thus amounts to n_s = 761 to 708. Figs. 8 and 9 [2]) illustrate the lay-out and design of these turbines.

[1]) See J. Moser: „Neue Wasserturbinen-Anlagen", Schweiz. Techn. Zeitschrift Nos. 34/35, 1926.
[2]) See G. Großmann: „Ueber Propeller- und Kaplanturbinen", Wasserkraft und Wasserwirtschaft, Number 1, 1927.

Digitized by Google

The order for the turbines was placed at the beginning of 1925. The speed chosen at the time of the order was very high, especially in view of the fact that the head increases to 28 ft. Thanks to the careful design of the turbine, of the spiral intake, the draught tube, appropriate form of the blades and a non-crowded lay-out of the whole plant, results have been obtained, which prove that the Kaplan low-pressure turbine, as far as its efficiency is concerned, is rapidly approaching the quality of electric generators.

On October 6 th and 7 th 1927 extensive official acceptance tests were made, conducted by Professor Dr. Braun of the Technical High School in Stuttgart. The most tricky part of such measurements, viz. the determination of the water volume, was performed with the utmost care and employing six automatically recording measuring propellers simultaneously. Fig. 10 is a graph of the test results, which may be counted amongst the best hitherto obtained with a low-pressure plant, seeing that the maximum efficiency obtained was 92 per cent. Up to 40 per cent of the maximum output of the turbine its efficiency lies higher than 90 per cent. What strides this development is making is best proved by a comparison with the efficiency values guaranteed.

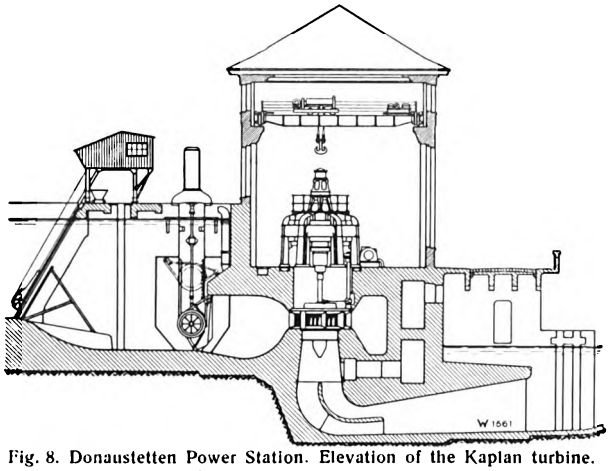

Fig. 8. Donaustetten Power Station. Elevation of the Kaplan turbine.

The turbines also satisfy all requirements mechanically. They run quietly and steadily and the governor control gear of the runner wheel functions irreproachably both in the mechanical and hydraulical sense, in spite of the fears entertained by some experts. Special mention must be made of the sealing of the runner wheel blade journals. The sealing method adopted, was tested in continuous workshop tests, and is giving entire satisfaction in service, there being no loss of oil.

We will now show how the reconstruction of old turbines, or the mere exchange of their runner wheels, renders it possible to raise their efficiencies to almost equal that of modern turbines.

The first instalment of machines in the C a m p o - c o l o g n o Power Station of the Brusio Co. Ltd. in Poschiavo were two horizontal shaft Girard turbines, which no longer satisfied the increased demand for power. Not only the output of 3000 HP per turbine was too small, but also the utilization of the available water volume was not economic according to present day notions. Therefore, a scheme was elaborated in 1922 according to which the casings, shafts and bearings were to be retained, whilst the turbines as such were to be redesigned as modern Pelton turbines with duplex deflector control.

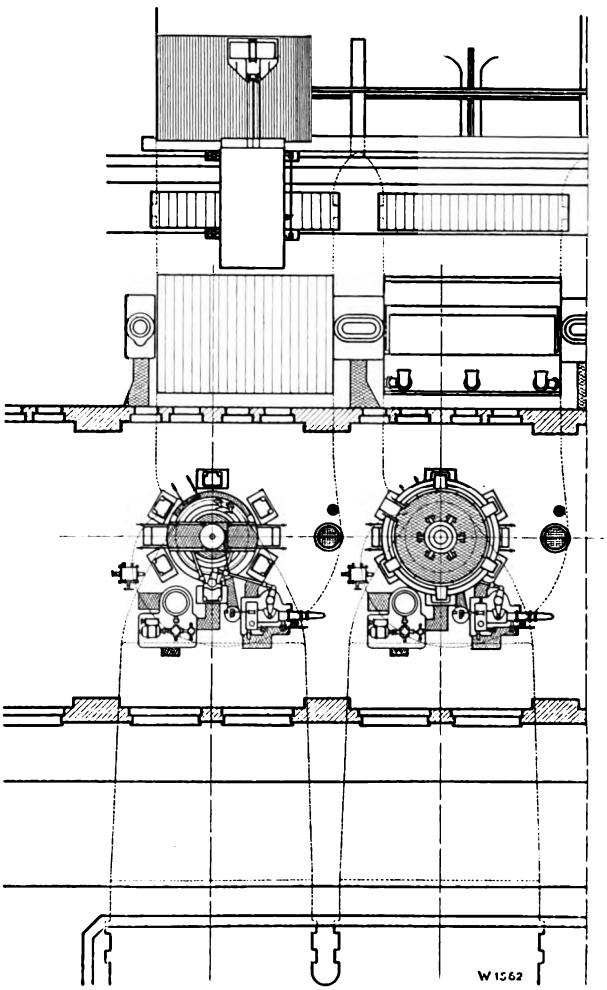

Fig. 9. Donaustetten Power Station. Plan

The constructional data for the reconstruction were:

$H = 1300$ ft.; $Q = 200$ gals./sec.; $n = 375$ r. p. m.

A solution was found permitting of effecting the intake of the water through a very slim bend, Fig. 11. *)

*) The larger the head, the more essential is it to pay the greatest attention to the guidance of the water. A description of elaborate tests under high natural heads will be published in the Escher Wyss News shortly.

Digitized by Google

The excellent guidance of the water in the inlet bend combined with careful designing of the runner wheel has produced very satisfactory results.

On August 11 th to 12 th 1923 the manager of the works carried out efficiency measurements with the utmost accuracy. Special attention was paid to the water measurements, which were made with an overfall without lateral contraction (Rehbock's formula).

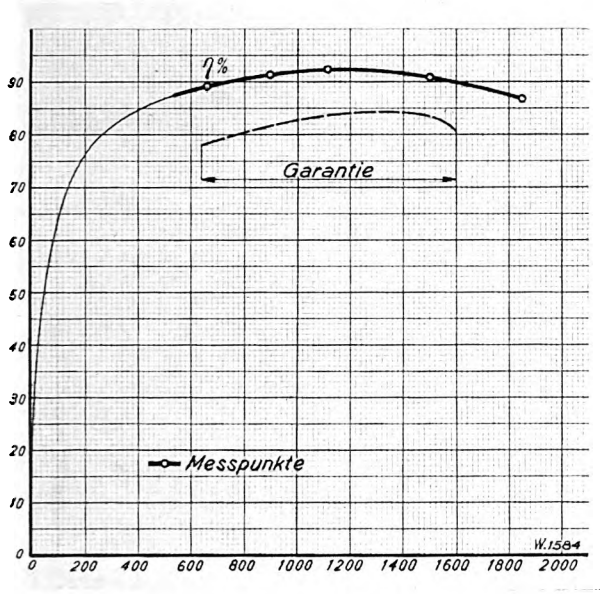

Fig. 10. Donaustetten Plant. Results of the official acceptance tests.
Turbine output N_e in HP.
Turbine efficiencies η in per cent.

As may be gathered from Fig. 12, efficiencies of up to 90.5 per cent were attained. The reconstruction of the old turbines has also been a complete success in every other sense.

Finally another example may prove how the efficiency of old turbines may be raised simply by provision of a new runner wheel and minor alterations of the upper part of the draught tube.

In 1912 Messrs. Escher Wyss & Co. supplied four vertical shaft Francis turbines in sheet metal spiral casings for the S e r o s plant of the Riegos y Fuerza del Ebro S. A. Each turbine was designed for the following data:

H = 155 ft.; Q = 620 gals./sec.; n = 250 r. p. m. [1])

The turbines, therefore, have a specific speed of $n_s = 247$, which in consideration of the high suction head of 20 ft., was deemed very high in those days and even now may be considered so, seeing that the well-known cavitation index $\sigma = \frac{B-Hs}{H}$ drops to the extraordinarily low value of $\sigma = 0.083$ [2]) at this specific speed. The turbines were formerly equipped with cast-iron runner wheels. The plant had fully satisfied the expectations and guarantees but in the course of years the runner wheels showed signs of corrosion, which according to our present knowledge of cavitation and corrosion phenomena may be designated as almost self-understood.

In 1926 we were invited to study the question of modernizing these turbines. Not only were runner wheels with high efficiencies to be provided, but these wheels were at the same time to be insensible to the effects of corrosion. The excellent efficiencies obtained with the model wheel, Fig. 13, induced our client to tentatively reconstruct one turbine. The following guarantees, referring to a net head of 155 ft., could be given:

at N =	14750	12500	11050	7375	HP
η =	84	88	87	82	per cent

For the sake of comparison we quote the efficiencies guaranteed for the old wheels:

at N =	14500	12300	10900	7250	HP and H = 155 ft.
η =	82	86	85	80	per cent

In view of the comparatively high suction head, which could not be altered, the new runner wheel

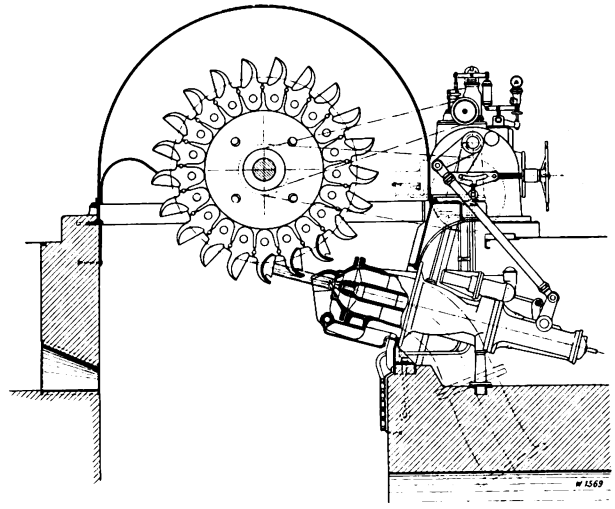

Fig. 11. Campocologno Plant. Elevation of the Pelton turbine.

was made of bronze. The results of the reconstruction were so satisfactory — measurements undertaken by the Company showed efficiencies of more than 90 per cent — that the client ordered four more wheels.

[1]) See Alb. Huguenin: „Die Wasserkraftanlagen Tremp und Seros der Barcelona Traction, Light u. Power Co.", Schweiz. Bau-Zeitung LXIX und LXX 1917.
[2]) See the following article, page 44.

Digitized by Google

These few examples may suffice to show what may be achieved by systematic model tests and progressive development of known designs. Undoubtedly the near future will be marked by further progress. However, the nearer we approach the practical limits, the more should it be remembered

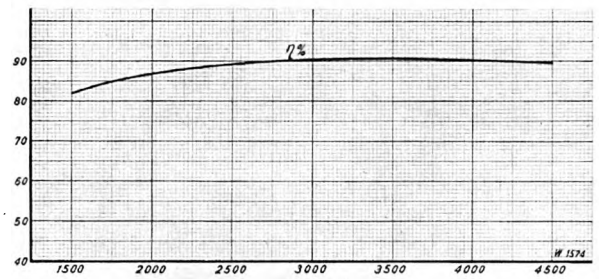

Fig. 12. Campocologno Plant. Results of the official acceptance tests. Turbine output N_e in HP; turbine efficiencies η in per cent.

that it is imperatively necessary to exercise the utmost care when planning a plant. On no condition should purely theoretical considerations be decisive, as has probably frequently been the case formerly, but extensive laboratory tests must go hand in hand with the theoretical investigations, which are then correspondingly utilized for the design of the large scale machines.

In Europe, as in America for some time past, the Purchaser will have to be called upon to increasingly participate in the costs of such investigations, especially where larger machines are involved, the more so as these investigations even in their present extent are fraught with heavy expenses.

Compared with the total figure of the plant, the expenses for model tests after all are only a small item, which hardly enters the question, especially if the tests result in an improvement of the effi-

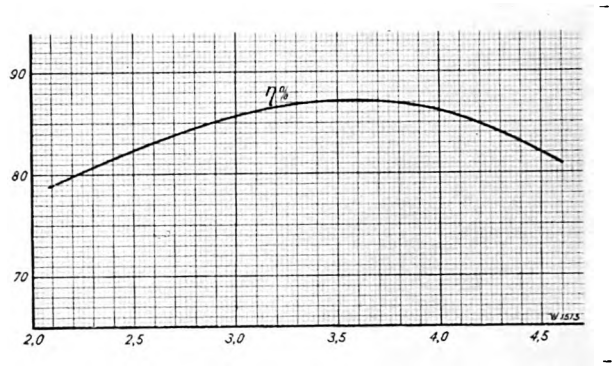

Fig. 13. Seros Plant. Efficiency curve of the test turbine of 20″ runner wheel diameter.
Turbine output N_1 in HP.
Turbine efficiencies in per cent.

ciency over the value normally to be expected. Then again, such tests, especially in the case of low-pressure plants, may result in large savings in building costs, and it is, therefore, only fair that the costs of such investigations should not be borne exclusively by the engineering firms supplying the machinery.

It would be very welcome if this idea would be accepted by all concerned, as it would spell a considerable aid for the European industry in its keen overseas competitive struggle. And last but not least, a boom in our industry would naturally benefit all water power plants.

Cavitation phenomena in water turbines.

By J. Ackeret.

The term «cavitation», which nowadays plays such an important part, is to be found in practically no book on physics, and even manuals on turbines contain remarkably little information.

I say «remarkably», because cavitation is by no means a mysterious, but on the contrary a very natural and explicable process. A physically trained person should be able to prognosticate cavitation in turbines without knowing much about specific speeds and the like. Why did we never hear anything of this phenomenon in former days? Simply because it did not give us much trouble, and because we were not able to construct wheels of such high speeds as are necessary to produce cavitation.

Nevertheless, it is a fact that no less a person than the Basle mathematician Leonhard Euler in his work «Théorie plus complète des machines qui sont mises en mouvement par la réaction de l'eau», published in 1754, in which he develops the turbine equation characterized by his name (impulse moment theorem), almost as a matter of fact writes the conditions necessary for cavitation. *)

*) He writes: "We have to guard against it (cavitation), as otherwise reality would differ altogether from theory".

Digitized by Google

Cavitation is caused by the fundamental property of water to evaporate at a sufficiently low pressure even when the temperature is quite normal.

Everybody is acquainted with the fact that on high mountains water boils sooner, i. e. at a lower temperature, than at the foot of the mountains. At sufficiently low pressure the room temperature suffices to cause the water to evaporate. The steam pressure (in metres water column) is:

at	0	5	10	20	30 ° Centigrade
	0.06	0.09	0.12	0.24	0.43 metre water column.

If the outer pressure drops to the steam pressure corresponding to the momentary temperature of the water, then boiling, i. e. the formation of bubbles, of the water sets in. It is quite evident that this renders the irreproachable running of the machine impossible and may lead to very serious trouble. Frequently also intensive corrosion may be traced to this boiling.

If the water contains dissolved gases, say carbonic acid (CO_2), these are also liberated at low pressures and rise as bubbles. A turbine operated with seltzer (soda) water would, therefore, evince the above-mentioned disagreable phenomena already at low speeds just like a machine erected too high above the tail water level.

We will first of all study the question: How do the low pressures arise in turbines and where are the critical points to be sought? Let us to begin with consider the simple low-pressure turbine. The machine is provided with a draught tube so that it may be erected above the tail water level without losing head by «hanging free». We would then have to calculate as follows: So many metres suction head (H_s) as are available, so many metres «vacuum» will prevail immediately behind the runner wheel, i. e. the pressure there is so many metres (water column) lower than the outer pressure (barometer level B, likewise expressed in metres water column *). Now, it is at once evident that H_s may not be greater than B, as otherwise the pressure behind the wheel, measured absolutely ($B - H_s$), would be negative, i. e. the water would have long since evaporated. This is nothing else than the celebrated «horor vacui», which played such an important part in Galilei's days, expressed in modern terms.

In countries lying on high levels, B is considerably smaller than at sea level and the «admissible» suction head also diminishes, as shown in the following table:

Sea level	0	1000	2000	3000	4000	metres
barometer level	10,3	9,2	8,1	7,2	6,4	metres water column.

For low levels the admissible suction head would accordingly be 9 to 10 metres. However, everybody acquainted with water power plants knows very well that the use of this simple formula generally gives rise to serious trouble. It is quite out of the question to adopt suction heads approaching this value.

We have made a mistake inasmuch as we set the vacuum equal to the «static» suction head H_s, see Fig. 1. This is true for the closed guide apparatus (filled draught tube), a condition in which we are not especially interested. As soon as the water flows, the pressures under certain circumstances vary very considerably. For economical reasons the turbine diameter is chosen as small as possible. As a conquence the water leaving the wheel is still very agitated and represents a kinetic energy, which cannot be neglected. If the draught tube is given a cylindrical form, the water must retain its velocity and the kinetic energy is irrecoverably lost. For this reason attempts have been made to dismiss the water from the draught tube as tranquilly and slowly as possible by enlarging the latter in the direction of the flow and designing it as tapered «diffusor». Now, how can a simple stationary tube recover the kinetic energy of the water leaving the runner wheel? To perform work, moving parts must be available (work = power × way!). The moving parts are naturally the turbine blades; however, the tapered draught tube has the effect of reducing the pressure underneath the blades and thus to increase the head acting immediately on the wheel. According to the energy theorem, the sum of pressure (potential) energy and kinetic energy is constant, abstracting from friction losses. If, therefore, c_{m_1} designates the velocity at the inlet of the draught tube, c_{m_2} the velocity at the outlet of the tube and $\frac{p_1}{\gamma}$ and $\frac{p_2}{\gamma}$ the pertinent heads, then

$$\frac{p_1}{\gamma} + \frac{c_{m_1}^2}{2g} = \frac{p_2}{\gamma} + \frac{c_{m_2}^2}{2g} \qquad (1)$$

wherein γ designates the specific weight of the water and g the acceleration of the earth. At the same time, however,

$$c_{m_1} F_1 = c_{m_2} F_2 \qquad (2)$$

*) If B_{Hg} represents the barometer level in millimetres mercury column, the barometer level in metres water column is:

$$B_{H_2O} = B_{Hg} \times 0.0136.$$

Digitized by Google

wherein F_1 designates the cross section of draught tube at inlet
and F_2 designates the cross section of draught tube at outlet,
as the inflowing quantity of water is the same as the outflowing quantity.

Now in general F_2 is very large, many times larger than F_1, so that $c_{m_2}^2$ conversely is small and may without scruple be taken as zero.

The pressure difference $\frac{p_2}{\gamma} - \frac{p_1}{\gamma} \simeq \frac{c_{m_1}^2}{2g}$ is called the maximum dynamic suction head. In reality the dynamic pressure increase is less than the value given above, because friction and eddying losses occur in the draught tube. We will now introduce the draught tube efficiency η_s and for the actual dynamic suction head write

$$H_{dyn} = \eta_s \left\{ \frac{p_2}{\gamma} - \frac{p_1}{\gamma} \right\}_{max} = \eta_s \frac{c_{m_1}^2}{2g} \qquad (3)$$

The actual pressure head prevailing at the draught tube inlet is then given by the co-operation of the static and dynamic suction heads. Equation (3) for the moment only holds for a horizontal draught tube, which is effective in a purely dynamic sense. When the tail water is under atmospheric pressure B (in metres water column), then the pressure head at point S, Fig. 1, is less than B by

$H_s + H_{dyn} = H_s + \eta_s \frac{c_{m_1}^2}{2g}$ the absolute pressure head at that point, therefore, is

$$\frac{p}{\gamma} = B \quad H_s - H_{dyn} = B - H_s - \eta_s \frac{c_{m_1}^2}{2g} \qquad (4)$$

Now it is evident that $\frac{p}{\gamma}$ may not attain the value zero; therefore, the extreme case is

$$B - H_s - \eta_s \frac{c_{m_1}^2}{2g} = 0, \quad \text{or}$$

$$H_s = B - \eta_s \frac{c_{m_1}^2}{2g} \qquad (5)$$

This equation 5 is already very instructive

Let us investigate as example 1 a high-pressure spiral turbine (Francis low-speed type).

H_o = total head = 200 metres,
$c_{m_1} = 0.20 \sqrt{2g H_o} = 12.5$ metres/sec.
$\frac{c_{m_1}^2}{2g} = 8.0$ m, B = 10 m (erected at a height of 500 metres).

If a suction head of «only» 3 metres is desired, then, at $\eta_s = 0.9$, a value readily obtainable with an appropriate design of the draught tube, the total recovery by calculation is found to be

$$0{,}9 \times 8{,}0 = 7.2 \text{ metres}$$

and the absolute pressure underneath the runner wheel $\frac{p}{\gamma} = 10 - 3 - 7{,}2 = -0.2$ or < 0!

i. e. that in this case we must surely expect trouble and a reduced efficiency, because the evaporation of the water already sets in at low positive pressures so that the negative value calculated above will never enter the question. One will, therefore, logically try to erect the turbine in a lower position, say with a suction head of 1 metre or even zero metres. For the rest we see that even in the absence of a static suction head, a very considerable dynamic suction head is active. This proves that with a suction head of zero the danger of cavitation is by no means eliminated. So simple the matter is in reality, so numerous, nevertheless, are the errors notoriously committed in this question.

We will now pass on to example 2: a high-speed low-pressure Kaplan turbine.

Let $H_0 = 10$ m
$c_{m_1} = 0.6 \sqrt{2g H}$
$\frac{c_{m_1}^2}{2g} = 3.6$ metres

With $\eta_s = 0.8$ (the draught bends of low-pressure

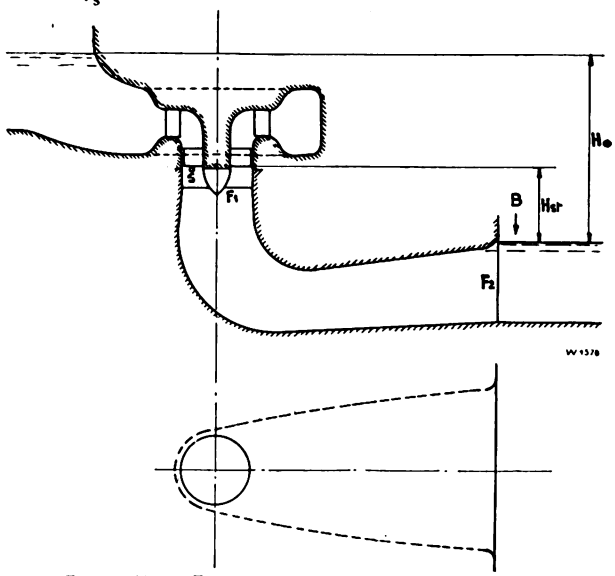

Fig. 1. H_0 = Total head; H_{st} = Static suction head;
F_1 = Cross section of draught tube at inlet;
F_2 = " " " " " " " outlet.

plants are less favourable than the slim draught tubes of high-pressure Francis turbines) and B = 10 metres, the maximum static suction head according to equation 5 should be:

$$H_S = 10 - 2.9 = 7.1 \text{ metres!}$$

Everybody acquainted with Kaplan turbines will be amazed at this figure and will, object (rightly, as we shall see further on) that our calculation, which in

Digitized by Google

the case of the high-pressure turbine apparently gave quite acceptable values, for the turbine under consideration fails in a catastrophal manner. Apparently another influence is active apart from H_s and H_{dyn}, which has so far not been taken into account.

What gives rise to the greatly increased danger of cavitation in Kaplan turbines?

This question may be answered by asking another question: Are we sure that the pressure immediately behind the runner wheel is really the lowest pressure obtaining in the turbine? Namely, if there were points of lower pressure, then we would be careless with our calculation, just as careless as a designer, who in his calculation of the mechanical strength of a construction does not take the weakest point into account but considers himself on the safe side when his construction is strong enough «elsewhere».

If we imagine the turbine to have very many blades and consequently very narrow channels, then, according to the old turbine theory, we have a continuous decrease of the pressure in the moving channel from the inlet to the outlet. The lowest pressure prevails at the outlet and is identical with the pressure calculated by us from the barometer level, draught tube recovery and static suction head. Equation (4) then is really valid.

However, the development of high-speed turbines has resulted in avoiding narrow channels (Kaplan, Dubs); the total blade surface was considerably reduced in order to obtain minimum friction losses in spite of the high speeds. Kaplan followed up this idea to the last extreme and obtained high speeds with very short blades. But here very serious difficulties cropped up, which in the main were due to cavitation. The turbines behave very well at low heads but may fail absolutely under higher heads. The only remedy is to increase the blade surface and thus to revert to the older turbine forms. Here we have the cardinal points on which modern turbine design hinges: reduction of friction for the one, necessitating small surfaces, and safety against cavitation for the other, requiring large surfaces. The one-sided tendency to attain maximum efficiencies is evidently not wise in such cases, for here it is a question of safety in service.

If we examine the pressure distribution on such blades more closely, we find the following, see Figs. 2 and 3.

A cylindrical section through the blades at c—c, Fig. 2, is shown deployed. The blades are relatively far apart (propeller turbine) and there can be no talk of guidance of the water in a «channel». The old stream line theory fails completely; it would require constant conditions over the whole width of the channel, whilst we in reality have to deal with every shade of pressure distribution within the blade space. Now the pressures measured on the surface of a blade have been inscribed in such a manner that the figures given are a measure for the difference of pressure between the pressure behind the blades (i. e. at the inlet of the draught tube) and the corresponding point. On the back of the blades lower pressures actually occur than behind the wheel; the «weakest» points are therewith disclosed and the experienced works engineer

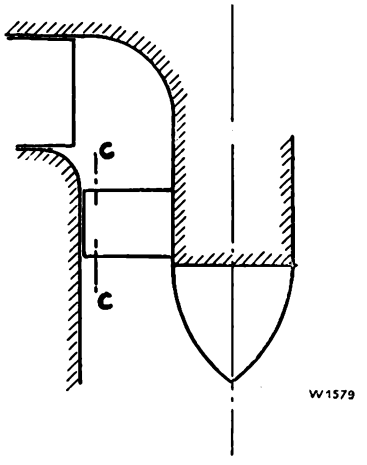

Fig. 2. Diagram of a propeller turbine.
The cylindrical section c – c is shown deployed in Fig. 3.

will at once detect the identity with those points where corrosion is frequently observed.

The inscribed figures are referred to the square of the relative outlet velocity w_2, because all pressure differences increase as the square of the velocities. Which speed we choose for comparison is immaterial as such; we might just as well take w_1

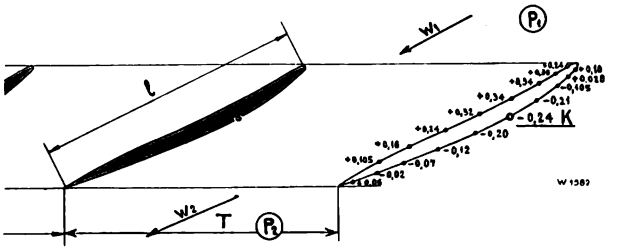

Fig. 3. Distribution of the pressure acting on the blades of the section shown in Fig. 2.
l = Blade length; T = pitch of blades; w_1 = relative inlet velocity; w_2 = relative outlet velocity. The figures inscribed at the various measuring points are a measure for the difference of pressure compared with the pressure underneath the runner wheel. The lowest pressure obtains at point K

(the relative inlet velocity), or the peripheral speed u, using different values of course.

Digitized by Google

If we now examine the minimum pressure, we have

$$H_{min} = H_2 - 0.24 \frac{w_2^2}{2g}$$

For other blade forms, blade pitches, blade lengths, the minimum value varies. Let us designate this value quite generally with λ, then

$$H_{min} = B - H_s - H_{dyn} - \lambda \frac{w_2^2}{2g}$$

In the worst case $H_{min} \sim 0$, therefore,

$$0 = B - H_s - H_{dyn} - \lambda \frac{w_2^2}{2g}$$

Let us rewrite this expression as follows:

$$\frac{B - H_s}{H_0} = \frac{H_{dyn}}{H_0} + \frac{\lambda w_2^2}{2g H_0} = \sigma \qquad (6)$$

then we obtain an important cavitation index (sigma) much used nowadays. If a certain type of turbine is given, then the ratios $\frac{H_{dyn}}{H_0}$ and $\frac{\lambda w_2^2}{2g H_0}$ are also unequivocally determined: a certain type of wheel with its pertinent draught tube at a certain admission (say at full load) has a certain σ-value. This value may be found experimentally and we are then always in a position to calculate if in a given case (H_0 and H_s given) this type may still be used, or if there already exists danger of cavitation.

Were there no local vacua on the back of the blades, we would have

$$\sigma = \frac{H_{dyn}}{H_0},$$

in reality, however the admissible σ is considerably larger. (Note that s m a l l σ values are dangerous!)

By extending the blades, «channels» are again formed and we thus approach the older wheel forms, the local vacua disappear, the admissible σ values become smaller and the danger of cavitation is diminished.

For a certain high speed (specific speed n_s approx. 600) we obtain the following curve from measurements, Fig. 4, wherein σ is plotted against $\varphi = l/T$. The graph shows us that the extension of the blades is very effective at first, but less effective later. A certain length of blade should, therefore, not be surpassed *).

That the local vacua become large with small blade surfaces, may also be seen when we distribute the axial thrust of the water, which approximately equals the head multiplied by the wheel surface, over the blades, which after all have to «carry» the head. We then naturally have higher specific pressures for smaller surfaces. However, we know that such blade surfaces not only take up forces through the action of pressure on the concave side but also through the action of vacuum on the convex side. It is, therefore, perfectly clear that the vacua must also increase with diminishing surfaces and equal total load.

Generally the individual factors are not so closely examined in practice as we have analyzed them above. Especially with the older complicated forms

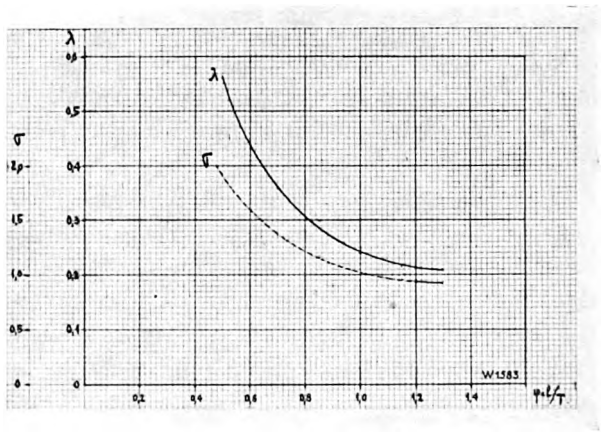

Fig 4. λ and σ values as a function of the ratio: blade length to pitch for a specific speed of approx. 600.

of Francis turbines it would be a rather difficult task to consider all factors giving rise to vacua.

One, therfore, proceeds to find the critical σ

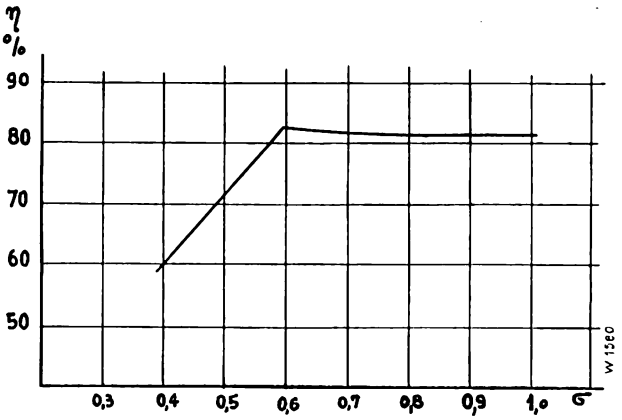

Fig. 5. Efficiency of a Kaplan turbine with fixed runner wheel and guide blades, as a function of σ.

value experimentally. Cavitation test plants serve this purpose, similar to those, which Messrs. Escher Wyss & Co. have had in operation for some

*) See „Schweiz. Bauzeitung" No. 11, Vol 91, 1928.

Digitized by Google

time. Such a test furnishes an efficiency curve at different σ values by varying H_o and H_s.

Fig. 5 illustrates an example in which the efficiency rapidly decreases below $\sigma = 0.6$ owing to cavitation. With this wheel σ_{min} should not be less than 0.8 (a sufficient margin of safety must remain). If for different types, characterized by their specific speed, we plot the σ values ascertained by experiment, we obtain a curve, which gives a very good survey of the limits of application. Fig. 6 illustrates such a σ curve according to D. Thoma (Munich), who has especially emphasized the importance of cavitation. This curve represents the present limit, which should not be exceeded. Deviations downwards or upwards will surely still occur, but in the course of time we shall be confronted by an insurmountable barrier.

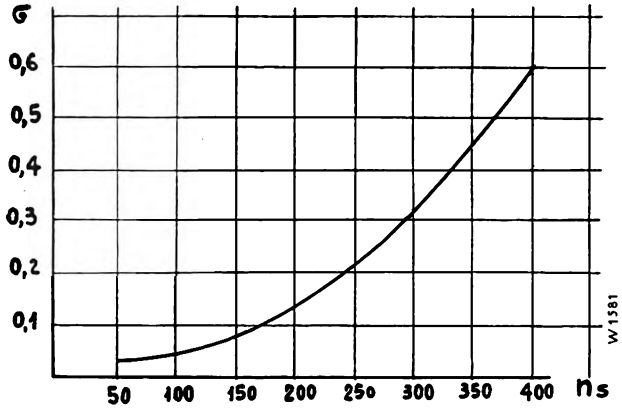

Fig. 6. Limit values of σ for Francis turbines according to D. Thoma.

For the rest, too much faith should not be placed in such curves; they have a similar character to that of the yielding point of metal, which under certain conditions may vary considerably due to circumstances. To explain the application of this curve, we publish two examples hereunder:

1. Given a head of 20 metres; for practical reasons the turbine is erected at a level, which results in a suction head of 6 metres. B = 10 metres.

First of all we calculate

$$\sigma = \frac{10-6}{20} = 0.20$$

The specific speed n_s according to the curve may not surpass the figure 250. At $N_e = 10\,000$ HP we have 107 r. p. m. in maximum.

2. A turbine is required for an output of $N_e = 10\,000$ HP; $H_o = 100$ metres head. 2500 metres above sea level; speed n = 375 r. p. m. Which maximum suction head is permissible?

$n_s = \frac{n}{H_o}\sqrt{\frac{N_e}{\sqrt{H_o}}} = 118$; the highest admissible value of $\sigma = 0.05$. From these data we calculate

$$H_s = B - H_o \times \sigma = 7.6 - 5 = 2.6 \text{ metres.}$$

These examples will suffice to show the value of the σ curve. Certainly a number of secondary considerations also exercise an influence, which we cannot deal with here, as we are only interested in the main issue. With progressive development, the summary σ values will only be employed for approximate calculations and in their stead calculations will be used, which define the actual vacua at each point of the turbine more accurately.

We have now acquired a general knowledge of the conditions giving rise to cavitation. In a second article to be published shortly, we shall deal with the actual nature and the effects of the cavitation phenomena in turbines.

Economic considerations regarding the different power storage possibilities*)

By A. Maas.

The ever-increasing demand for peak load current in our electricity works has rendered the provision of this current one of the most important tasks of electro-economics. Attempts have been made to solve this more or less difficult problem in different ways and it is, therefore, not to be wondered at that frequently steps were taken, which did not result in a complete success. The expert entrusted with the task must conscientiously investigate the different possibilities of economically covering the peak load demands in order to be able to submit the most suitable suggestion for each individual case. In the following lines a survey of the different storage possibilities will be given and their relative economy compared with hydraulic power storage by means of pumps.

*) Extract from a lecture held in the Association of Electricity Works of Württemberg and Hohenzollern.

Digitized by Google

According to a paper read at the annual meeting of the Association of German Electrical Engineers in Kiel in 1927, director Dr. Ruths proposes to employ the Ruths accumulator, which hitherto has been exclusively used in Works employing process steam, to cover peak load demands. Amongst other items he explained the scheme of a power station with 3 accumulator-steam turbines, each of 20 000 kW output, which are fed by 24 vertical Ruths accumulators and calculated the price of such an accumulation plant at approx. £ 7 per kW. It is an open question whether this figure is really justified because a plant of this description has hitherto not been executed. It appears to be quite impossible to construct such a plant for less than £ 9 per kW. Ruths assumes that only about 5 per cent peak load of the total production have to be provided for. This may be the value at which Ruths accumulators reach their maximum size and it is not of vital importance if, according to Ruths, the fuel consumption during the peak loads, compared with the total fuel consumption of the works, is neglected. But even Ruths himself arrives at a mean steam consumption of 18.7 to 20.7 lbs per kilowatt-hour, whereby the fact is not taken into account that the steam turbine, as soon as it serves as instantaneous stand-bye, still requires steam for running idle, which results in a considerable increase of the steam consumption. This minimum reduction of the peak load is by no means an ideal condition for electricity production. On the contrary, all endeavours should be concentrated on attaining an output curve of fairly constant level. This, however, implies that under certain circumstances the peak load may amount to one-third of the total load, and then the fuel consumption is a very important item. The advantages accruing from the cheaper initial costs of such a steam accumulation plant are thereby offset, and it is quite evident that a greater suppression of the peaks than proposed by Ruths must result in a marked increase in the cost of the kilowatt-hour generated. In such cases, therefore, the suppression of peaks by means of Ruths accumulator plants cannot be called economical.

It is also an open question whether such a battery of vertical Ruths accumulators is reliable in service. Thus much is certain that it is far more difficult to receive dry steam from them than from the horizontal Ruths accumulators hitherto in use. It is also apparent that steam turbines having to operate with a steam pressure varying from 213 to 21 lbs./sq. in. must have a bad thermodynamic efficiency, quite apart from the fact that the Ruths turbine at an initial pressure of 213 lbs./sq. in. requires considerably less steam for the initial minimum suppression of the peaks than for the mean steam pressure with the considerably higher peaks.

The feed water accumulator of Dr. Marguerre (also called constant pressure accumulator), somewhat resembling the Ruths accumulator, has the advantage that no specially designed accumulator turbines are required and the steam is economically utilized in the turbines without loss. The maximum discharging capacity of constant pressure accumulators is, however, limited and this accumulator, therefore, only allows of suppressing small peaks for a short time. The costs of the installed kW are said to be somewhat lower than with Ruths and the pure fuel costs per kW are likewise lower owing to the better thermodynamic efficiency. However, both accumulator systems have one feature in common and that is, when the main station breaks down, the accumulator plant also very soon fails. Therefore, owing to the small capacity, the important service power and emergency power reserve is entirely lacking. When using large Diesel engines to cover the peak loads, the size of the units is limited to 15 000 HP; however, it is hoped that future development will lead to an increase of speed. Whereas for the large Diesel engine hitherto in use the installed kW costs approx. £ 15, it may be possible to reduce this figure to £ 10 with high-speed engines. The fact, however, that here, as with the Ruths and feed water accumulators, only a small fraction of the peak load is covered by the total current production, proves that only the extreme peaks can be economically covered at the high cost of generation by a Diesel engine. As a matter of fact, current production costs of up to 1¼ d. per kilowatt-hour are reached according to the utilization of the plant. The instantaneous reserve, which is so important for peak load suppression, cannot be obtained with a Diesel engine. It is true that the large Diesel engine in Hamburg was started and took over load within 6 minutes, but generally one will have to calculate with a longer time from cold starting of the Diesel engine to the moment it supplies current to the network. Apart from this, three attendants are permanently required, thereby considerably increasing the overhead expenses.

Digitized by Google

Another means of dealing with peak loads is the electric accumulator. This method is, however, restricted to larger networks because the capacity of such batteries is considerably smaller than that of the above-mentioned peak compensating machines, and only direct current can be used. The approximate installation costs per kW of an accumulator battery may be taken at from £ 20 to £ 30. The efficiency of electric storage is very unfavourable and the costs of peak load suppression by means of storage batteries are, therefore, very high.

At the World Power Conference in Bâle in 1926 the economy of hydraulic storage of steam power was still contested and the author, therefore, published detailed investigations regarding this question in the «Wasserkraftjahrbuch 1925/26». The results of these investigations are reproduced in the diagram, Fig. 1; they prove that according to the hours of service and the total efficiency a saving in coal must result.

The economy of hydraulic storage of steam power is thus proved beyond question. How much more economical must the utilization of a water power combined with hydraulic storage be! Figures could be mentioned regarding the building costs, which are considerably lower than those mentioned above for the other power storage plants, but there is no use in relying only on figures because the final result is greatly influenced by local conditions. Nevertheless, be it permitted to make a general statement regarding the building costs of a hydraulic storage plant in connection with an existing water power plant when only the pump and turbine station has to be provided. In such a case the installed kW should not be higher than £ 2.10/- to £ 4 so that Ruths and feed water accumulators, and the Diesel engine are far in the rear economically and cannot be counted as serious competitors. Similar conditions obtain when in new plants the natural inflow of water does not suffice to cover the peak loads; the outstanding economy of hydraulic storage is at once apparent. In a pure storage pump plant as a rule the costs for the structural work predominate and, according to the size of the plant and the local conditions we may calculate with £ 7.10/- to £ 11.10/- per kW including the elevated storage basin, pipelines, machine equipment, etc. It is not admissible to adopt the costs per kW as a comparison for the economy, especially as the capital charges of thermal power plants are about 50 per cent higher than for hydraulic power plants.*)

If, according to Ruths, the building costs per kW amount to from £ 7 to £ 9, then for otherwise equal conditions and financial return they may reach the figure of £ 10.10/- to £ 13.10/- with storage pump plants. The steam consumption of Ruths accumulators according to his own statements is 18.7 to 20.7 lbs. per kilowatt-hour, i. e. at the lower of the two values already about 65 per cent more than in normal service. For a heat content of 12 600 B. T. U/lb. the pure coal costs for Ruths accumulators at a price of 20/- per ton work out at 0.265 to 0.290 d per kilowatt-hour, to which must be added the plant.

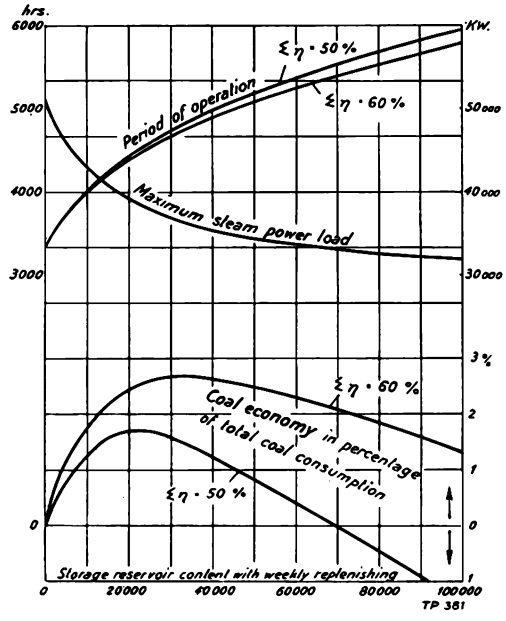

Fig. 1. Operating period, load on steam power and coal economy as a function of the content of the storage basin.

equipment costs, which are about the same as for storage pump plants, viz. £ 10.10/- to £ 13.10/- per kW. A saving in coal is not to be expected in steam accumulator plants because the accumulators and turbines have to be kept under steam. On the other hand, owing to the favourable load factor of hydraulic storage plants, a saving of coal is made, or at least an increased consumption avoided. The pure coal costs for hydraulic storage of thermal energy

(* See also „Elektrotechnische Zeitschrift" 1927, Number 41, Remarks by Dr. Jng. R. Werner, Berlin.

Digitized by Google

calculated on the same basis amount to only $\frac{0.265}{1.65} =$ 0.162 d. per kilowatt-hour. That implies that the building costs of £ 10.10/- to £ 13.10/- may be considerably exceeded with hydraulic storage plants without even approaching the economic limit of this storage system. With Diesel engines, the pure fuel costs at a fuel consumption of approx. 9 oz. per kilowatt-hour and a price of 6/- per 100 lbs. figure out at 0.4 d., i. e. considerably higher than with Ruths accumulators, whereby the building and attendance costs are also decidedly higher.

When judging the economy, a fundamental difference must not be overlooked, viz. the building costs of Ruths accumulator plants vary almost proportionally with the stored energy, whilst with hydraulic storage they vary almost proportionally with the installed output. Now in a Ruths storage plant, the main costs are borne by the accumulators and piping, so that with a duplication of the invested capital the peak load covered is only about 1.5 fold. On the other hand, with hydraulic storage plants the peak load covered rises to about 1.9 fold at double the capital invested, because in such storage plants the costs of the increased output per kW, referred to the kW output installed, diminish as far as the main items, viz. the machines and piping are concerned, whilst only the costs for enlarging the storage basin increase somewhat more.

As already mentioned, the figures given above may increase or diminish according to the prevailing conditions, and it is, therefore, of primary importance to ascertain how high the building costs per kW may actually be, in order to ensure the economy of the hydraulic storage plant. In this connection Professor Dr. Gleichmann of the German Transports Ministry has published very interesting and instructive data *), by comparing hydraulic storage with the erection costs of a modern steam power plant. He arrived at the conclusion that with storage pump plants a limit of £ 19.10/- may still be considered as acceptable. The investigations made by Professor Dr. Gleichmann concerning the economy of hydraulic storage plants fully bear out the author's views published in the «Wasserkraftjahrbuch 1925/26.» The importance of hydraulic storage of steam power may be gathered from the graph illustrated in Fig. 2, plotted as a function of the load factor. The graph shows us that with a load factor of up to 0.3, which is an average value for normal steam power stations the coal consumption already rapidly rises. The Fig. 3 shows us how the costs of the generated

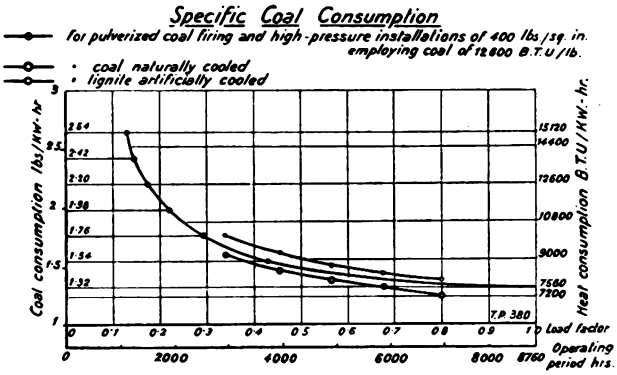

Fig. 2. Specific coal consumption of a steam power plant according to Gleichmann-Block.

kilowatt-hour of a steam power station rapidly increase through the capital charges and coal consumption.

The economy of storage pump plants is so exceptionally favourable because the efficiencies of the turbines and pumps have been considerbably improved during the last decade on the strength of exhaustive tests made. Formerly 75 per cent was considered a good efficiency for pumps, but today the large modern storage pumps have effeciencies of up to 86 per cent. Likewise the turbines, whose efficiencies at full load now figure at 90 per cent. This alone produces a gain of from 15 to 18 per cent for the pumps and turbines in favour of the hydraulic storage plants, so that a total efficiency of more than 65 per cent including transformers, consumption of auxiliaries and service losses may be counted upon.

In conclusion a few words regarding the most economical head for storage pump plants may not be amiss. Formerly it was thought that such plants were only practicable for heads exceeding 250 ft, but very careful calculations made during the past few years have proved that even heads of 67 feet under certain conditions may be utilized for hydraulic storage. This enables electricity works, which are situated in unfavourable geographical regions and

*) See „Glasers Annalen", Jubilee Number 1927: Nutzbarmachung von Wasserkräften für Reichsbahn-Elektrifizierung.

Digitized by Google

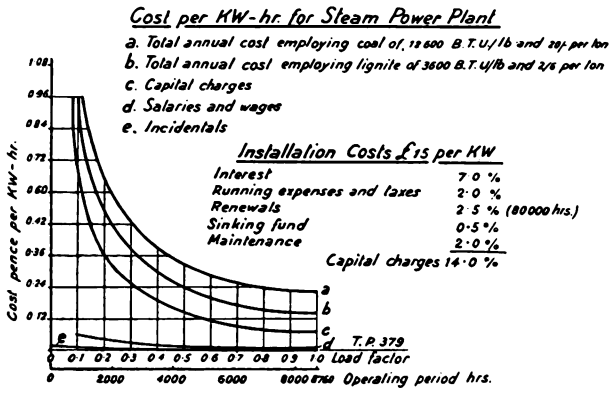
Cost per KW-hr. for Steam Power Plant
a. Total annual cost employing coal of 13600 B.T.U/lb and 20/- per ton
b. Total annual cost employing lignite of 3600 B.T.U/lb and 2/6 per ton
c. Capital charges
d. Salaries and wages
e. Incidentals
Installation Costs £15 per KW
Interest 7·0 %
Running expenses and taxes 2·0 %
Renewals 2·5 % (80000 hrs.)
Sinking fund 0·5 %
Maintenance 2·0 %
Capital charges 14·0 %
Cost pence per KW-hr.
T.P. 379
Load factor
Operating period hrs.

Fig. 3. Cost of generation by a steam power plant according to Gleichmann-Block.

have to deal with heavy peak loads, to avail themselves of the great advantages of hydraulic storage plants without having to resort to costly long-distance transmission lines.

Whilst comparing the different storage possibilities one important item, which cannot be expressed in figures, was quite overlooked, i. e. the huge economical importance for the Country concerned of the complete utilization of the «white coal» through storage pump plants. The water power of our low-pressure plants, whose economic development is hindered by insufficient utilization, can be turned to profitable account by means of storage pump plants. Hydraulic storage also represents an inestimable stand-bye, especially as the storage plant is operated quite independently of the main works, and the reliability of a hydraulic plant according to the breakdown statistics is considerably higher than that of any other system of current supply. The employment of a storage plant as instantaneous stand-bye offers no constructional difficulties even with the largest machines.

Autovapor plant for the concentration of tobacco liquid supplied to the Italian Tobacco Monopoly.

By Robert Peter.

In large inland and foreign tobacco factories the offal of tobacco leaves, especially the ribs, are used to produce an extract containing nicotine. By extraction in vessels a tobacco liquid solution of low specific weight is recovered from the minced tobacco offal. This basic solution is highly concentrated in evaporators, the process being performed in a vacuum in order to avoid as far as possible loss of nicotine. Concentration is undertaken to render the sale of the extract more advantageous. The extract, which is put on the market in tins, barrels and other packages, is chiefly used to combat undesirable insects and parasites on plants and animals. Before use the extract is generally diluted. Nicotine is also recovered from the extract and used in medicine, for instance as an antidote for malaria.

Last year Messrs. Escher Wyss & Co. received an order from the Italian Government for the supply of a complete evaporating plant for tobacco liquid to be operated on the «Autovapor» system.*) This system employs the compression method, whereby the vapours developed in the boiling solution are converted into heating steam by means of mechanical compression, electrical energy being chiefly used for this purpose. Among the many «Autovapor» plants built by Messrs. Escher Wyss & Co., this plant is of special interest, firstly as all the

*) Kummler & Matter and Wirth system

Digitized by Google

parts of the plant operate under vacuum, and secondly because an organic solution is concentrated, whereby a certain maximum boiling temperature may not be exceeded.

Fig. 1 illustrates the lay-out of the plant. The evaporator battery had to be erected in an existing very narrow room and is, therefore, of very compact design. The essential parts of the plant are indicated in the foot note of the illustration.

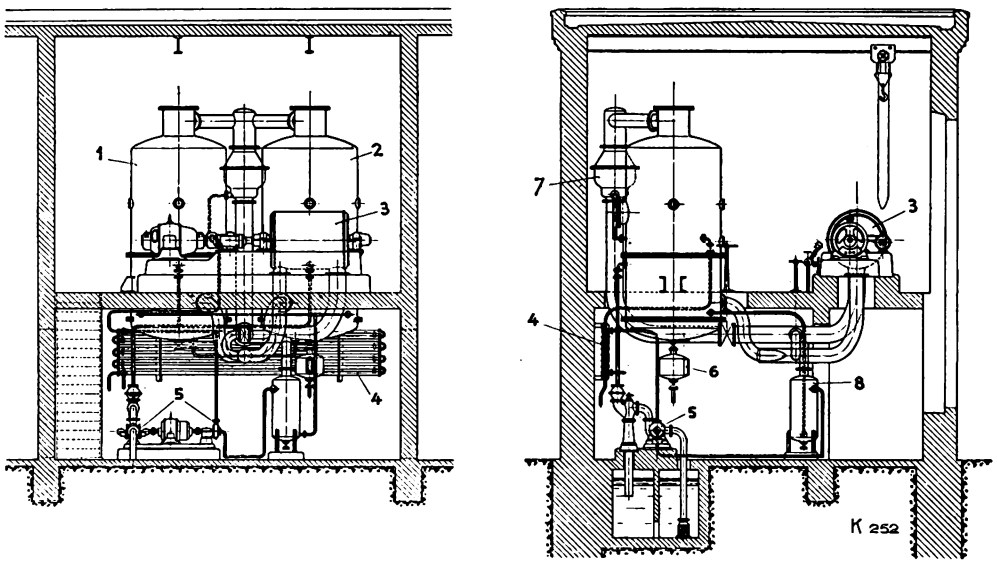

Fig. 1. Lay-out of the plant.
1 and 2 evaporators; 3 turbo-compressor with electric motor; 4 preheater; 5 pump set; 6 discharge; 7 liquid separator; 8 condensed water reservoir.

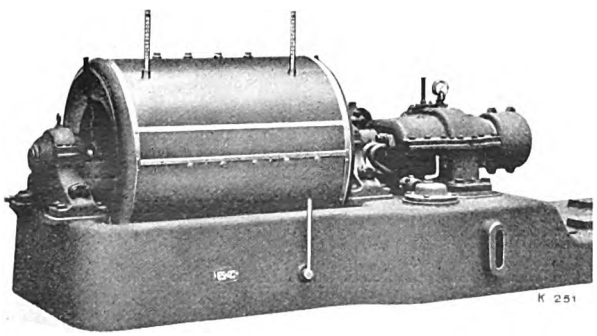

Fig. 2. Compressor with driving motor.

The solution boils in the two evaporators 1 and 2 and the vapours developed are drawn off and compressed by the compressor, and then forced into the heating chambers of the apparatus. Here the vapours condense giving off their latent heat to the boiling solution. The hot condensate is led to the preheater 4, which operates on the counterflow principle, and there preheats the tobacco liquid. The plant is deaerated and the condensate conveyed from the heating chambers to the preheater by means of the pumping unit 5, which consists of a water jet air pump and a condensate pump. The concentrated solution may be withdrawn from the apparatus 2 through the discharge 6 without interrupting the operation. The boiling temperature is kept constant simply by regulating the quantity of the make-up steam.

Regarding the compressor, Fig. 2, we may mention that this is a turbo-compressor specially designed by Escher Wyss for water vapour and vacuum.

All the parts of the plant are specially adapted for their respective duties, and the plant has given every satisfaction during the eight months' operation, not having failed once.

The results of the official acceptance tests are given hereunder. The strict guarantees given by Messrs. Escher Wyss & Co. have been fully met. It should be pointed out that the acceptance test, lasting 12 hours, was not performed with cleaned apparatus but after the plant had been in operation for 10 days.

		Guarantees	Results of the acceptance test June 1927
1. Concentration: Beginning	°Bé	4	4
End . .	°Bé	40	40
2. Mean evaporation . . .	lbs/hr	1760	1770

Digitized by Google

3. Power consumption of compressor (measured) at the coupling of the motor	HP	75	74.3
4. Specific evaporation . .	lbs/kW-hr	31.9	32.3
5. Power consumption of vacuum pump	HP	9	9
6. Make-up steam	lbs/hr	77	72.5
7. Temperature of the boiling solution in the first apparatus	° Fahr. max.	140	136

The Zoelly steam turbo-locomotive.

By H. Nyffenegger.

I. The past development of the reciprocating engined locomotive.

The reciprocating locomotive in its fundamental form, driving mechanism, fire tube boiler and blast tube as invented by George Stephenson has in the course of its hundred years' development passed through a number of more or less definite stages. The progress made in the design of the constructional elements and the increased knowledge of the thermal reactions in the boiler and the engine resulted in a considerable reduction of the coal and water consumption per horsepower-hour. The reduction of the mechanical losses in the driving mechanism, the improved utilization of the combustible gases in the fire tube boiler, the introduction of the expansion valve gear and the raising of the boiler pressure to from 142 to 170 lbs./sq. in. combined to reduce the former specific coal and water consumption from 11 to 3 and from 68 to 25 lbs. per horsepower-hour respectively. However, the most remarkable progress in the design of steam locomotives was made only at the end of the last and the beginning of this century.

With the increase of the boiler pressure, the pressure and the temperature drops in the cylinder between the inlet and exhausted steam were increased, which resulted in increased condensation and re-evaporation losses. Mallet was the first to introduce the compound arrangement, i. e. the placing in series of a high and low-pressure cylinder whereby considerable economies were effected. On the introduction of compounding, the boiler pressures were raised to 215 to 240 lbs./sq. in.

The advantages of superheating the steam were recognized early; but the time had not then come for its practical application and so this question sank into oblivion. Merit is due to Wilhelm Schmidt of Cassel for having taken up the idea of superheating again. By designing suitable superheaters, pistons, piston valves and stuffing boxes he rendered the use of highly superheated steam possible for locomotives and as a result the complicated four-cylinder compound locomotives utilising saturated steam were forsaken in favour of the simple superheated twin designs. Superheated steam engines, owing to their greater available heat drop and to the complete absence of condensation and re-evaporation losses, effect a saving of up to 25 per cent in coal and 30 per cent in water compared with compound locomotives employing saturated steam.

Ten to fifteen years ago the steam, after having performed work in the cylinder, was uselessly exhausted to atmosphere through the blast pipe to produce the boiler draught, carrying along with it its full latent heat. Exhausted steam at atmospheric pressure, however, has a minimum temperature of 212° Fahr. and a large quantity of heat contained in it can be utilized by preheating the cold feed water to nearly 212° Fahr. During the war, when the ubiquitous dearth of coal called for the utmost restriction of the coal consumption, the feed water preheaters, which till then were found on only a few locomotives, were universally adopted. The transfer of heat from the exhaust steam to the feed water takes place either through the walls of a surface preheater or by direct contact. In the latter case part of the exhaust steam, which has passed through an oil separator, is mixed with the feed water, either by means of a waste steam injector or by blowing the steam into a condenser sprinkled by the feed water. As such preheaters not only recover heat but also

Digitized by Google

improve the boiler efficiency a saving in coal of up to 15 per cent is effected. It may also be added that waste gas feed water preheaters similar to the economisers of stationary steam plants were used early on locomotives, but without success, since they required large heating surfaces and very quickly became ineffective owing to deposits on the tubes. Owing to the additional resistance introduced, the draught of the blast pipe is diminshed to such a degree that the evaporation of the boiler is impaired, in addition to which a large part of the possible gain is lost by the increased blast tube and cylinder back pressure.

Omitting minor improvements (valve gear etc.) the reciprocating engined locomotive exhausting to atmosphere and operating at a boiler pressure of from 170 to 240 lbs./sq. in., had reached the limit of thermal improvement by the outbreak of the war. The feed dome sludge separators introduced during the last few years certainly offer advantages in service (boiler maintenance) but the working process of the locomotive is hardly affected by them.

II. Steam power plants and steam locomotives with condensers.

With stationary reciprocating engines and installations on board ship the pressures and heat drops had long since been considerably increased compared with engines exhausting to atmosphere by employing a vacuum in a condenser connected with the cylinder. This also resulted in a great saving in steam and fuel. The following Table 1 shows how with initial steam condition of 225 lbs./sq. in. and 662° Fahr. the theoretical steam consumption per horsepower-hour diminishes with increasing vacuum.

TABLE 1.

Vacuum " Hg (Baro. 30 " Hg)	0.00	8.35	15.55	18.45	21.30	24.20	25.65	27.10	28.55
Steam consumption lbs./HP-hr.	10.48	9.66	8.76	8.35	7.90	7.33	7.00	6.57	6.17
Improvement per cent	—	7.70	16.20	20.10	24.60	29.90	33.20	37.20	41.00

The fuel consumption is improved to about the same extent. The table indicates that a high vacuum should be aimed at, but the upper limit is determined by the temperature and quantity of the cooling water, which has to absorb the latent heat when the steam is condensed. Cooling water is usually available in unlimited quantities either from rivers or lakes, or is cooled in cooling towers by the action of evaporation. In the latter case a greater power is absorbed by the auxiliary machinery to produce the same vacuum, and, therefore, one is content with a lower value. The production of vacuum in stationary or marine plants requires but a few hundredths of the total output, so that the theoretical saving is practically obtained in operation.

To bring the steam locomotive a considerable step forwards with regard to its heat utilization, the problem of working condensing had to be tackled. The realization of this idea formerly failed owing to two difficulties. Firstly, even with a comparatively small vacuum, cylinders of such dimensions are required to deal with the large volume of steam that they can hardly be located in the available space. With locomotives developing higher output it is altogether impossible to locate the cylinders. Secondly, a really practical locomotive water cooler of small dimensions and minimum power consumption has as yet not been invented.

The steam turbine, which during the last 20 years has experienced an unprecedented development, and in large steam power plants has been universally adopted overcomes the first-mentioned difficulty since it allows for the complete expansion and utilization of the steam up to high vacua. In the steam turbine no parts which are lubricated come into contact with the steam, and it, therefore, supplies an absolutely oil-free condensate, which when surface condensers are employed circulates in a completely closed circuit and does not deposit scale in the boiler. This is of vital importance for the life and maintenance of the boiler, for with locomotives the boilers are heavily stressed and rapidly deteriorate through scale deposits thereby entailing heavy upkeep expenses and frequent withdrawal from service. It is beyond question that the condensing steam turbine, apart from the economy in coal, represents in this respect alone a considerable improvement.

The most difficult problem of the condensing locomotive, viz. the transfer of the latent heat of the steam in the condenser had also been satisfactorily solved by Dr. Zoelly, the inventor of the

Digitized by Google

Zoelly steam turbine, when he introduced the air-cooled evaporation cooler. Dr. Zoelly also influenced the whole design of the turbine locomotive choosing simple, fundamental, constructional methods. Co-operating with the late locomotive specialist Kjelsberg of Winterthur, Dr. Zoelly, worked out the definite plans for an experimental locomotive. In close co-operation with the firm of Krupp in Essen, the cooler problem was further studied and solved even for very large locomotive capacities.

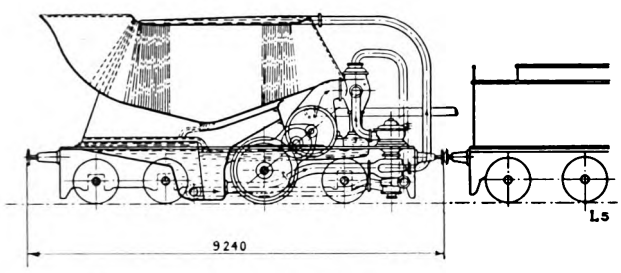

Fig. 1. Condensing locomotive with exhaust steam turbine driving tender attached to a standard tender.

The illustrations, Figs. 1, 2 and 3, show Zoelly designs of condensing locomotives dating from the years 1918 to 1919. They evince the tendency to improve the economy of existing reciprocating engined locomotives by adopting simple means. To avoid flexible vacuum piping, the turbine and condenser are always arranged on the same vehicle. All designs provide for a jet condenser and a sprinkler cooler cooled by the draught of the air when the locomotive is travelling. In Figs. 1 and 2 an exhaust steam turbine is connected in series with the normal reciprocating engine; in Fig. 1 the turbine and condenser are situated on a separate driving tender attached to the usual tender. In Fig. 2 the turbine driving on to a single axle and the condenser are situated on the front end of the locomotive, whilst the cooler is combined with the ordinary tender. Fig. 3 illustrates a locomotive with pure turbine drive, in which the sprinkler cooler runs in front thus ensuring the best possible utilization of the draught. Jet condensers, although favourable as regards space requirements, were soon given up, since the condensate cannot be maintained in the fresh water circuit and the boiler, therefore, is liable to scale as occurs with locomotives exhausting to atmosphere. If, on the other hand, water-cooled surface condensers are adopted as is customary with steam turbine drives, it is advisable to eliminate the piston engine altogether and to produce the total locomotive output by means of a turbine; the cleanliness of the steam is thereby ensured and the surface of the condenser cannot become covered with a film of oil. Fig. 4 illustrates a Zoelly turbo-locomotive of the latter design.

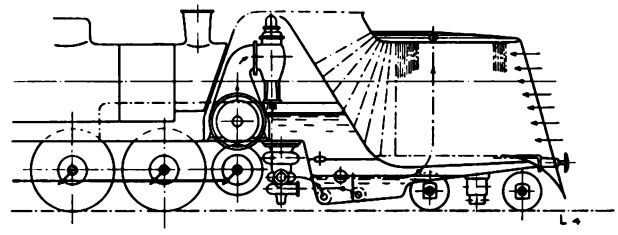

Fig. 3. Condensing locomotive with pure turbine drive. Cooler in front.

The chief items of the locomotive covered by patents are: Pure steam turbine drive from a turbine situated at the front end of the boiler transversely to the direction of travel, which by means of gears, intermediate shaft and parallel crank bars accentuates the driving wheels; water-cooled surface condensers on the locomotive and evaporation cooler on the tender.

Before giving a detailed description of the Zoelly turbo-locomotive, the fundamental question of the suitability of the steam turbine as locomotive engine will be dealt with.

III. The steam turbine as driving engine for locomotives.

In the steam turbine, the pressure and heat energy is transformed into velocity energy and the latter is converted to useful mechanical output by the blading. The ratio of the peripheral velocity of the blading to the steam velocity is of decisive importance for the efficiency of the energy transformation. Within certain limits the designer can by correct choice of speed, runner wheel diameters and number of stages in the turbine secure a favourable value for the above-mentioned ratio.

In stationary plants, the speed of the turbine is generally kept constant by means of a governor, so that the turbine runs at the same speed under all loads. The output at constant speed is dependent on the torque produced, which varies with the quantity of steam passing through the turbine. Steam tur-

Digitized by Google

bines, which are to serve as locomotive engines and are rigidly connected with the locomotive wheels by means of toothed wheel gears, have to satisfy quite different service conditions. It must be possible to run them at highly varying speeds and they must be able to develop large tractive efforts when starting and on gradients. How far the steam turbine meets these requirements not only in the purely mechanical sense but also economically will be explained hereunder.

According to the impulse theorem, the peripheral force of 1 lb. of a gaseous or liquid medium acting on the blades of an axial turbine when flowing through the latter is

$$P_u = \frac{1}{g}(c_{1u} - c_{2u})$$

wherein g denotes the acceleration due to gravity = 32.2 ft. per second^2, c_{1u} and c_{2u} the peripheral component of the absolute inlet and outlet velocity; u denotes the peripheral velocity of the wheel of 2 R diameter and $\omega = \frac{u}{R}$ the angular velocity. The torque M_u and output L_u at the periphery of the wheel for 1 lb. of the steam flowing per second is then equivalent to

$$M_u = \frac{R}{g}(c_{1u} - c_{2u}) \qquad \text{ft. lbs.}$$

$$L_u = \frac{u}{g}(c_{1u} - c_{2u}) \qquad \text{ft. lbs.} \times \text{sec}^{-1}$$

By appropriate choice of the cross-sections of the guide wheel and runner wheel channels, Fig. 5, it is possible to effect the transformation of the pressure and heat energy into velocity energy either in the guide channels alone, as in the case of the impulse turbine, where the same pressure exists on both sides of the blades, or that part of the total pressure difference is transformed into velocity energy in the runner wheel, as in the case of the reaction turbine, in which different pressures exist on either side of the wheel. The pressure differences at the clearances cause leakage and consequently also energy losses. In the impulse turbine there is no or only a minimum axial thrust, whilst in reaction turbines special pressure-compensating pistons have to be provided to counteract the axial thrust. The degree of reaction ϱ indicates the ratio of the heat drop transformed in the runner wheel to the total drop. For impulse turbines $\varrho = 0$. Proceeding with our investigation of the impulse turbine, we find that the steam flows from the guide channels at an angle α_1 and velocity of $c_1 = \varphi \times c_0$. The theoretical velocity c_0 is determined by the adiabatic heat drop transformed in the guide channel (given by the entropy chart of R. Mollier by the initial pressure, and temperature and

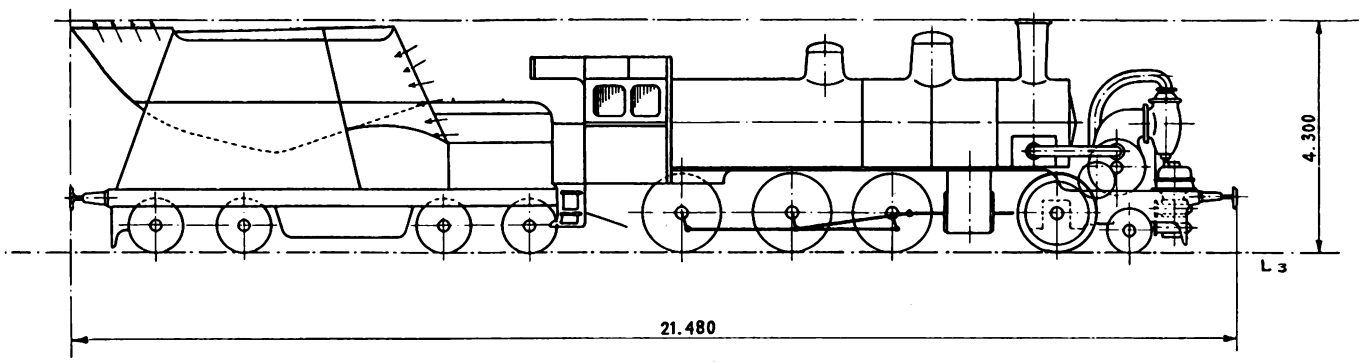

Fig. 2. Condensing locomotive with reciprocating engine and exhaust steam turbine.

the final pressure of the expansion)

$$h_0 = AL_0 = \frac{A}{2g} c_0^2 \; ; \quad \text{for } A = \frac{1}{778}$$

we have $c_0 = 223.7\sqrt{h_0}$

$\varphi = 0.94$ to 0.97 is a factor accounting for the friction in the guide channels, $\psi = 0.8$ to 0.9 the same factor for the runner wheel blading, the latter being dependent on the change of direction of the steam within the runner wheel blade. From the velocity triangles and the relative velocities w_1 (derived from c_1 and u) and $w_2 = \psi w_1$ then for equi-angular blades in which $\beta_1 = \beta_2$, we deduce

$$L_u = \frac{u}{g}(1 + \psi)(c_1 \cos \alpha_1 - u)$$

and therewith also the thermodynamic efficiency referred to the output at the periphery of the wheel.

$$\eta_u = \frac{L_u}{L_0} = 2\varphi^2 (1 + \psi)(\cos \alpha_1 = \frac{u}{c_1}) \frac{u}{c_1}$$

Digitized by Google

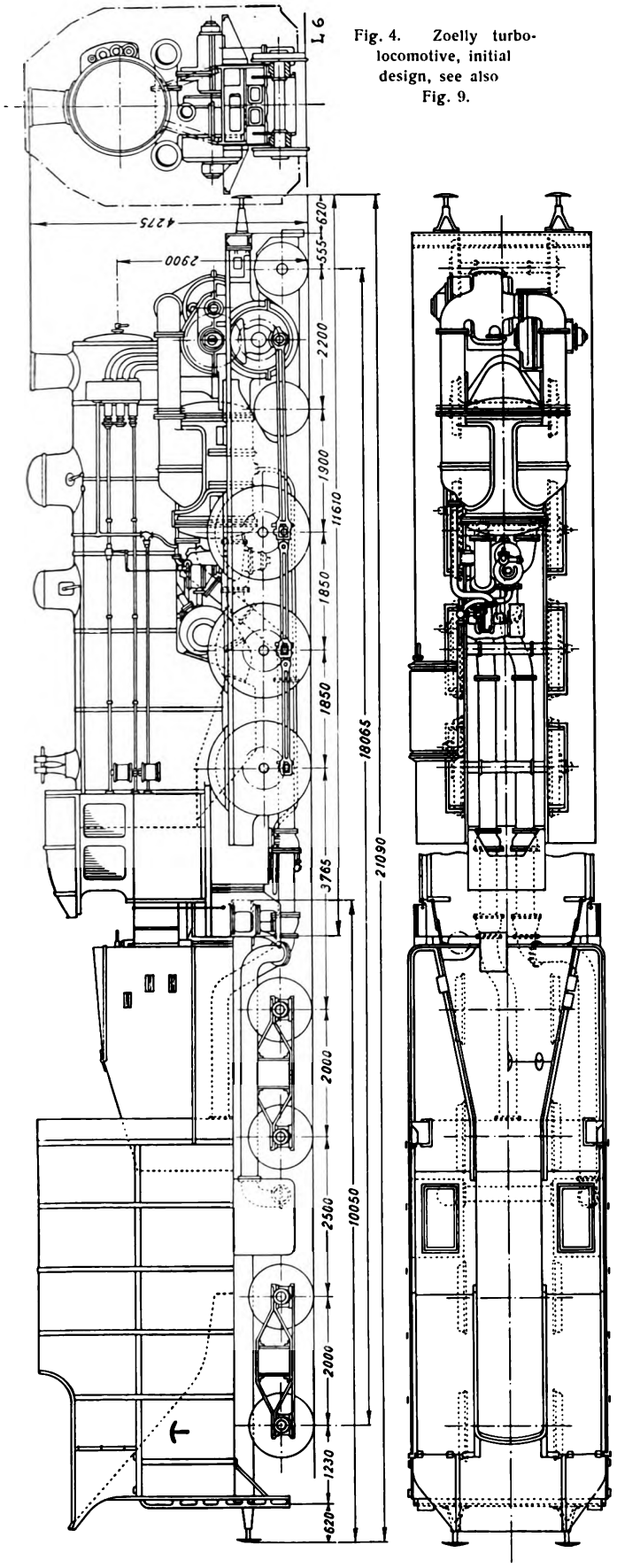

Fig. 4. Zoelly turbo-locomotive, initial design, see also Fig. 9.

This important equation shows that for a fixed guide angle α_1, and for φ and ψ assumed to be constant, angle β_1, (derived from c_1 and u) adjusted for entry without shock and for equi-angular blades, the efficiency at the periphery of the wheel depends entirely on the ratio $\frac{u}{c_1}$ and varies parabolically with this ratio. The maximum efficiency is

$$\eta_{u\,max} = \frac{1}{2}\,\varphi^2\,(1+\psi)\cos\alpha_1$$

and is reached when

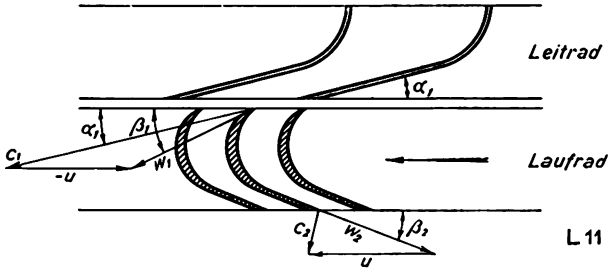

Fig. 5. Velocity triangles.
Leitrad = guide wheel; Laufrad = runner wheel

$$\frac{u}{c_1} = \frac{\cos\alpha_1}{2} \quad \text{(for smaller nozzle angles } \frac{u}{c_1} \cong \frac{1}{2}\text{)}$$

At maximum efficiency the peripheral velocity is, therefore, nearly equal to half the steam velocity, Fig. 6. As $L_u = \eta_u \times L_0$, the output also varies according to the same parabolic law as the efficiency. The balance of the adiabatic heat drop h_0 not transformed into useful load, viz. $(1-\eta_u)\,h_0$ reaches its minimum value at $\frac{u}{c_1} \cong \frac{1}{2}$ and rises for $u = 0$ (at rest) and $u = c_1$ (overspeed) up to h_0. The steam then flows through the turbine with the full initial heat content without performing work, just as through a throttling device.

For locomotive operation, the relation of the peripheral force on the runner wheel blading to the peripheral velocity is of special importance, since with a fixed gear ratio λ between the driving wheels and the turbine, the variation of the drawbar pull Z to the travelling speed V is given by it.

Using the above equations

$$P_u = \frac{1}{g}\,(1+\psi)\;(c_1 \times \cos\alpha_1 - u)$$

The peripheral force thus varies proportionally with the peripheral speed, for η_{umax} it is:

Digitized by Google

$$P_{un} = \frac{1}{2g}(1 + \psi)\ c_1 \times \cos \alpha_1$$

and for u = 0 and constant ψ

$$P_{uo} = \frac{1}{g}(1 + \psi)\ c_1 \times \cos \alpha_1$$

As c_1 and consequently also the steam quantity flowing through the turbine wheel remains the same at all speeds, the peripheral force when standing still is just twice as large as with the most advantageous travelling speed.

The above equations hold only on the assumption of a constant runner wheel loss factor ψ and that angle β_1 is adjusted for shockless running; furthermore β_1 and β_2 are assumed to be equal. In actual practice, however, the runner wheel blade angles β_1 and β_2 are fixed values and adjusted for the most favourable ratio of $\frac{u}{c_1}$. Now, if the peripheral speed is altered (c_1 remaining the same), the steam jet strikes the runner wheel blade under an impact angle varying with the speed and it must be deflected in the given blade direction β_1, by the impact angle, which causes a supplementary impact loss and the speed factor ψ diminishes. When travelling with lower speeds than the most favourable speed, the impact takes place in the concave side of the blade, with higher speeds in the convex side. In the latter case the loss is greater so that the efficiency after increasing to a maximum drops more rapidly than it rose. If ψ for the most favourable speed has the value of $\psi_{max} = 0.9$ and for at rest $\psi_0 = 0.7$ then from the equation

$$\frac{P_{uo}}{P_{un}} = \frac{2(1 + \psi_0)}{1 + \psi_{max}}$$

we arrive at

$$P_{uo} = 1{,}79\ P_{un}$$

The peripheral force curve P_u touches the theoretical straight line at $\frac{u}{c_1} \simeq 0.5$, slopes downwards deviating slightly on both sides and cuts the ordinate axis at the value 1.79 P_{un}, Fig. 6.

The deductions so far obtained for the single-stage turbine must be corrected inasmuch as the friction of the turbine disc and the windage of the blades not traversed by steam must be deducted from the output L_u (per lb. of steam) delivered to the periphery of the wheel. Let this be Z_r for 1 lb. of steam, then the «internal» output (corresponding to the «indicated» output of reciprocating engines) is:

$$L_i = L_u - Z_r$$

and the equation $$\eta_i = \frac{L_i}{L_o} = \frac{L_u}{L_o} - \frac{Z_r}{L_o} = \eta_u - \zeta_r$$

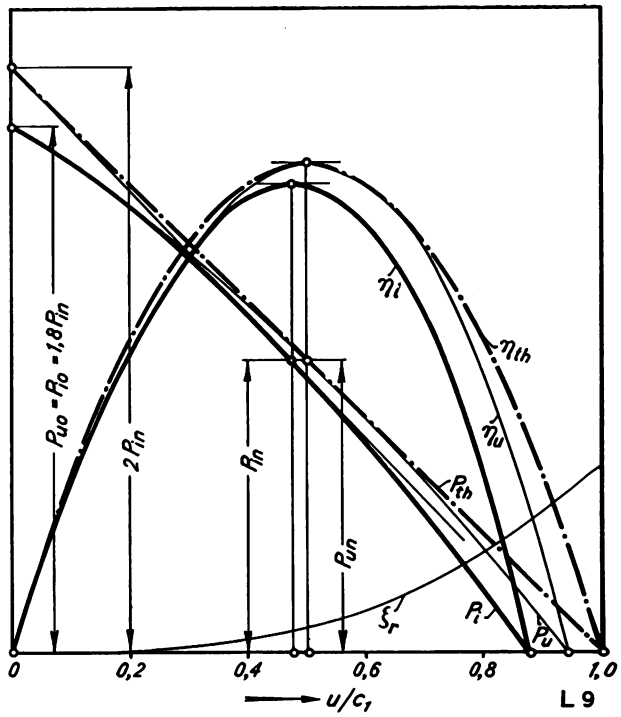

Fig. 6. Efficiency and peripheral force, with and without taking account of the impact loss and disc friction for a single-stage turbine.

is called the «internal efficiency». The value of the loss ζ_r increases as the third power of u and also depends on the specific weight of the steam, the length of the blades and the degree of admission. The influence of disc friction may be neglected when the outputs are large. At smaller outputs it is noticeable and it is remarkable that the maximum value of η_i does not lie at $\frac{u}{c_1} = 0.5$ but at a somewhat smaller figure. The actual output for 1 lb. of steam is finally obtained by subtracting the bearing and gear losses from the internal output.

We have so far restricted our investigations to single-stage turbines. However, such turbines are not capable of utilizing large heat drops because far too high peripheral speeds would be required to obtain a good efficiency. This difficulty is overcome by subdividing the total heat drop into a number of stages in series. The steam then flows through the multi-staged turbine in such a manner that each

Digitized by Google

stage operates with the most favourable value of $\frac{u}{c_1}$. A feature of the multi-stage turbine is that with equal efficiencies of the separate stages, the total efficiency of the turbine is higher than the individual efficiencies. This phenomenon may be explained by the fact that the heat loss of one stage is partially utilized in the following stage since it acts like an extraneously applied quantity of heat and, therefore, also the sum of the individual heat drops is higher than the original adiabatic total drop by the «recoverable» heat. The outlet energy is completely lost only in the last stage. If the speed of the multi-stage turbine deviates from the most favourable speed, the efficiency diminishes much in the same way as with the single-stage turbine, but the reduction is less as the impact heat loss of a stage is re-utilized in the following stage. The efficiency curve at its maximum point is flatter than with a single-stage turbine.

Contrary to the impulse turbine in which c_1 is independent of the peripheral velocity, c_1 in a reaction turbine is dependent on the peripheral velocity in an intricate manner, since the degre of reaction varies for a given blading, i. e. decreases with diminishing speed, which implies that the transformation of the heat drop into velocity energy is increasingly effected in the guide channels. This is also borne out by the fact that the quantity of steam flowing through the turbine increases with diminishing speed, whilst it remains constant in the impulse turbine.

Owing to the complicated relation between η_u, $\frac{u}{c_1}$ and ϱ a simple analytical expression for the best efficiency cannot be given. Closer investigations prove that the reaction turbine requires a somewhat higher peripheral velocity to deal with the same heat drop. The fundamental disadvantage of the reaction turbine, viz. the leakage losses at the clearances, force one to operate with very small drops in the individual stages. Compared with the impulse turbine and especially with the Zoelly turbine, this necessitates a large number of stages and long turbines if a reasonable efficiency is to be obtained. Per 1 lb. of steam flowing through the turbine, the reaction turbine when standing still has the same peripheral force as the impulse turbine, viz. $P_{uo} \simeq 1{,}8$ to $1{,}9 P_{un}$ and both types of turbines also behave the same in relation to the travelling speed.

In railway service, locomotive engines, no matter what kind they are, (reciprocating engines, electric motors, steam turbines, Diesel engines or combinations of them) require to develope an increasing tractive effort with diminishing speed. The steam turbine rigidly coupled with the driving wheels of the locomotive via a speed-reduction gear satisfies this mechanical requirement. In Fig. 7, the tractive efforts of a piston and turbo-locomotive are plotted as a function of the travelling speed. A normal output of 2000 HP at a travelling speed of 56 miles an hour is assumed for both locomotives. The steam quantity is assumed to be constant, viz. 30800 lbs. per hour fort the reciprocating engine and 21 120 lbs. per hour for the turbo-locomotive (including auxiliaries). The latter is equipped with a furnace

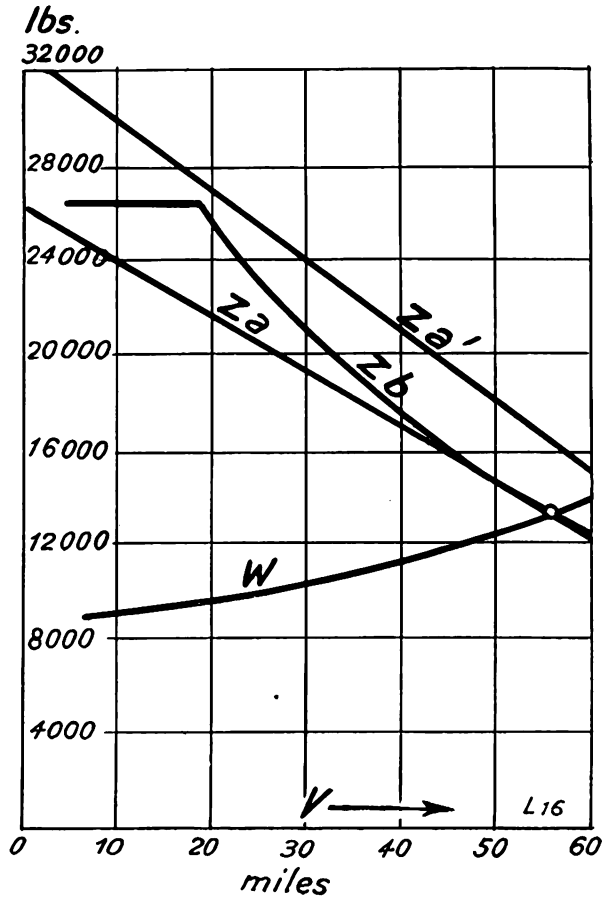

Fig. 7. Curve of drawbar pull of a 2000 HP reciprocating engine and a 2000 HP turbo-locomotive. Total resistance of a 150+525 ton train on a gradient of 3 per thousand.

V = Speed in miles per hour
Z = Tractive effort in lbs.
Za = " " of the turbo-locomotive at 21120 lbs. of steam per hour
Za' = " " " " " " " 26400 " " " " "
Zb = " " " reciprocating engine " 30800 " " " " "
W = Resistance in lbs.

Digitized by Google

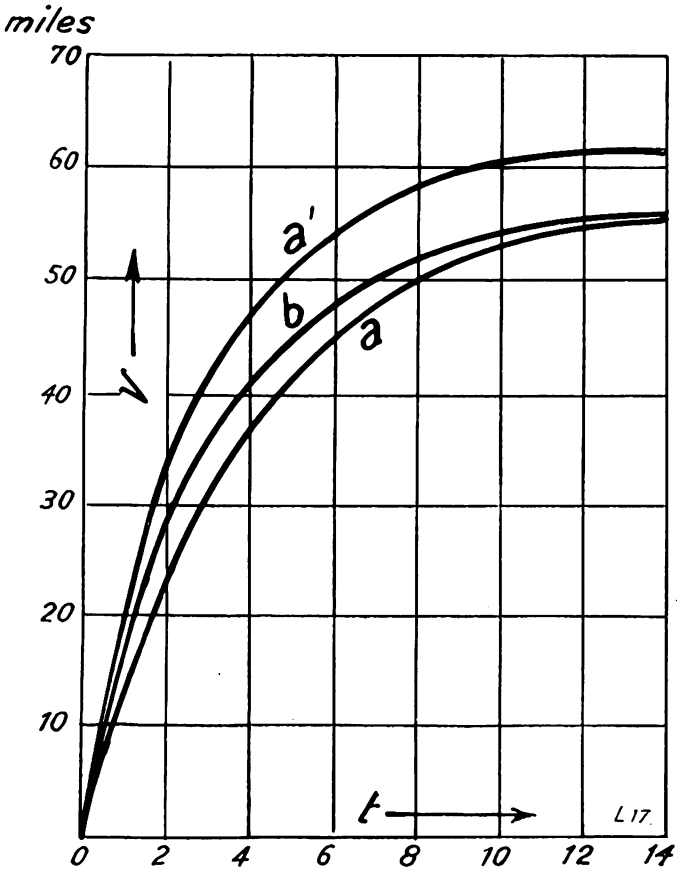

Fig. 8. Starting diagram of a 150+525 ton train on a 3 per thousand gradient provided either with a reciprocating engined locomotive or with a turbo-locomotive.

t = Time in minutes required for starting
V = Speed attained in miles per hour
a : Turbo-locomotive 21120 lbs. of steam per hour
a' : " " 26400 " " " " "
b : Reciprocating engine 30800 lbs. of steam per hour

fan, whose speed can be varied within wide limits, in place of the blast tube, and the steam production of the boiler can be raised to its maximum at any moment. Contrary to the pulsating torque of the reciprocating engine, the turbo-locomotive develops a uniform torque and is, therefore, capable of exercising a greater tractive effort when starting than the reciprocating engine, without fear of tossing. In Fig. 7 another curve of tractive efforts is plotted corresponding to a 25 per cent larger quantity of steam, and the resistance curve calculated according to Strahl for a total train weight of 675 tons on a gradient of 3 per thousand. In Fig. 8 the travelling speed is plotted as a function of the starting time for the three tractive effort curves of Fig. 7. Both illustrations clearly show that the steam turbine, as far as the tractive effort characteristic is concerned, serves the purpose of locomotive engine admirably but at low travelling speeds its efficiency decreases. Later on we shall have an opportunity of discussing the relation between travelling speed and steam economy.

For reversing the locomotive it is best to provide a turbine with a few stages, which when the locomotive travels forwards either runs light in the vacuum, or is disconected.

(To be continued.)

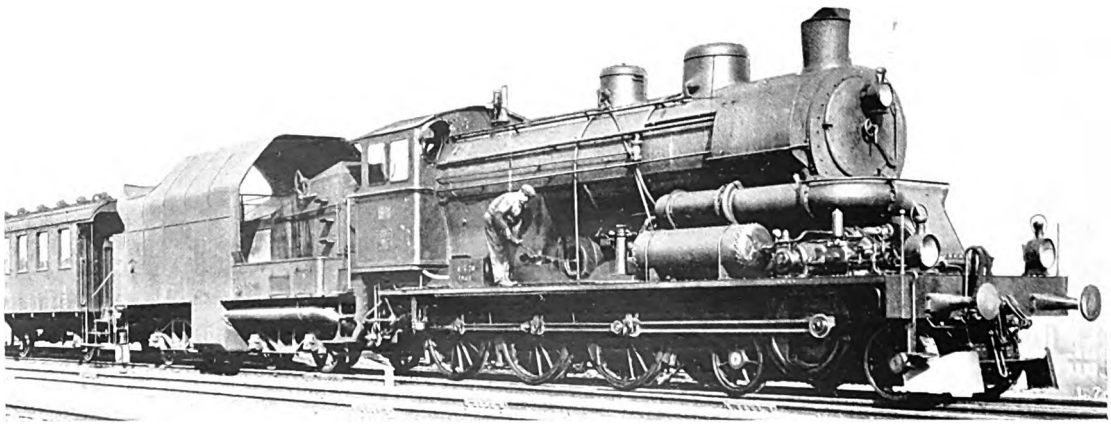

Fig. 9. View of Zoelly turbo-locomotive, initial design, see also Fig. 4.

Digitized by Google

Miscellaneous.

Our firm has lately received a number of important orders, some of which are briefly described hereunder. The Steam Turbine Department has recently booked an order for the delivery of a two-casing turbine of the Zoelly system for an output of 20000 KW at 3000 r. p. m., including the complete surface condensing plant for the Stockport Corporation (England). The town of Nishni Nowgorod (Russia) has ordered a two-casing Zoelly steam turbine for an output of 22000 KW at 3000 r. p. m. including the surface condensing plant, preheating and evaporating plant.

The English Company, The Synthetic Ammmonia and Nitrates Ltd. of Billingham have ordered 3 special steam turbines, each for an output of 3030 HP for driving Escher Wyss compressors.

2 two-casing steam turbines sets each for an output of 25000 KW at 3000 r. p. m. have been ordered by the Centrale de Schelle, Antwerp, which will be coupled to electric generators designed by the Ateliers de Constructions électriques de Charleroi.

The Water Turbine Department has from the beginning of 1928 to the end of February received orders for 33 turbines of a total output of 232000 HP.

The following plants are of special interest:

Uppenborn Power Station of the Municipal Electricity Works, Munich.

Supply of the complete hydraulic part consisting of: 3 vertical shaft Kaplan turbines each for an output of 12000 HP under a head of up to 47,5 ft. This is the highest head hitherto utilized by Kaplan turbines; the output of 12000 HP has also not been reached hitherto with Kaplan turbines.
One 1500 HP Kaplan turbine for the same head.

Vermunt Power Station of the Vorarlberg Iller Works in Bregenz.
The order given us for the complete equipment of this new central station comprises 4 Pelton turbines with horizontal shafts, each for an output of 33250 HP under a head of 2340 ft. The turbines will operate with one jet only and are, therefore, remarkable as having the highest output for a single jet and the highest speed under the high head in question.

Forces Motrices du Béarn:

Eygun Plant. 2 Pelton turbines, each with 2 wheels and 4 jets for an output of 6450 HP each under a head of 620 ft.

Lescun Plant. 2 Pelton turbines with horizontal shafts each for an output of 9100 HP under a head of 1050 ft.

Società Idroelettrica del Cismon:
Moline Plant. 2 Vertical shaft Francis turbines each for an output of 11200 HP under a head of 465 ft.

The Compressor Department is at present occupied with the execution of a number of large and interesting contracts.

The Synthetic Ammonia and Nitrates Ltd. of Billingham (England) have given us a repeat order for three large compressors with the requisite driving steam turbines, after the first two units had been delivered. The compressors deal with 33 to 40 tons of steam per hour under vacuum and have a power consumption of from 3000 to 3500 HP; they operate in connection with a compression evaporating plant. The steam turbines are able to give off the total output either as exhaust steam condensing turbines, as back-pressure turbines, or as mixed pressure turbines, and automatically effect the compensation between the high-pressure and low-pressure steam in the respective works. Whilst the lay-out of this plant and the evaporators was being planned, Messrs. Escher Wyss & Co. gave expert advice on the strength of the vast experience which they possess in this special field.

7 Gas compressors of 1500 and 3000 HP are in course of construction for another large chemical works in England. These machines are especially interesting on account of the materials employed for their manufacture, and which had to be selected to suit the properties of the gas to be handled. These requirements also influenced the choice of the cooling system (jacket cooling). Two exhausters, each for an output of 500 HP, were supplied to the same works a short while ago; the results of the acceptance tests were considerably higher than the guarantees.

A very interesting order also given by the chemical industry relates to a high-pressure turbo-compressor for an hourly capacity of 529500 cub. ft. at a final pressure of 410 lbs/sq.in. This high final pressure is the more remarkable, as a gas is handled, which is lighter than air. The driving turbine of 3400 HP output will be equipped with a special governor operating within very wide speed limits, and influenced by our approved volume regulation to provide for a constant suction volume of the compressor.

The Tata Iron and Steel Co. Ltd. (India) to whom we have already supplied 6 large blast furnace blowers, have now given us an order for another large blast furnace blower for a capacity of 64950 cub. ft/hr. at a pressure of from 23 to 33 lbs/sq. in. A turbine of from 5400 to 7200 HP output drives the blower. The turbine will also be equipped with a special speed governor operating in connection with the remarkably accurate Escher Wyss volume regulation.

Escher Wyss & Co. have also designed a special compressor, which has to circulate gas at a pressure of 2840 lbs sq. in. This machine runs at more than 20000 r. p. m. The most difficult problem of its design were the stuffing boxes.

Digitized by Google

Several smaller turbo-compressors of 10 000 r. p. m. operating at very low temperatures will be delivered shortly.

In the second half of last year we supplied two cooled exhausters for sucking off a gas mixture from a comparatively low vacuum and have now received a repeat order for three such machines.

A blower of 500 HP power consumption combined with a high-pressure back-pressure turbine operating at a pressure drop of from 426 to 21 lbs/sq. in. was put into service a few days ago. The turbine has a speed of 12000 r. p. m., which is reduced to 4000 r. p. m. by means of a reduction gear. A special feature of this machine is the extremely sensitive constant pressure regulation, which, however, permits of adjustment within very wide limits. Our customer now possesses four similar blowers for all of which the same stringent conditions regarding the regulation were stipulated.

Our compressor department also designs evaporating plants and is just now occupied with the execution of a large plant for the production of from 40 to 50 tons of table salt per day from brine. The order embraces every item from the entry of the coal into the boiler house to the exit of the table salt from the works. Escher Wyss & Co. were able to secure this contract on the strength of the very valuable experience gained whilst building a modern salt works in Bavaria in cooperation with experienced salt works specialists.

Our paper-making machine department supplied a machine to the Stroostoffabriek „Phoenix" in Veendam, which was put into service on October 14th 1927. The normal production could be taken up with the machine after one half hour's adjustment. The machine has a wire width of 7 3/4 ft. and was specially designed for the production of fine papers chiefly from bleached straw pulp; the operating speed is 41 to 330 ft. per minute. Immediately after putting this machine into service, another order was received from Holland from the paper mill „Gelderland" in Nijmegen, interested in the Stroostoffabriek Phoenix, for a similar machine for the production of very fine papers. Since the Paper Mill Padalarang (Java) has had an Escher Wyss paper machine in service since 1924, three complete paper machines have been supplied to the same customer within three years, a proof of the excellent quality and properties of the machines.

A short while ago we also furnished the equipment for a Cigarette Paper Mill of the Fuji Seishi Co. in Tokyo (Japan), consisting of 2 machines of 7 ft. working width. Apart from a number of beaters, edge runners and other machines for the production of paper and wood pulp, the following complete paper machines are in course of construction in our workshops:

For the Paper Mills Gelderland, Nijmegen:
The above-mentioned fine paper machine of 7 3/4 ft. wire width.

For a client, who does not wish to have his name mentioned:
A machine for the production of bank note and fine water mark papers.

For the Papierfabrik G. m. b. H., vorm. Brüder Kämmerer, Osnabrück:
1 fine paper machine with two wires for a working width of 10 1/2 ft. with 32 paper dryers of 5 ft. diam.

For Hoffmann & Engelmann, Neustadt a. Hardt:
1 special machine for high-grade photographic papers, working width 7 1/4 ft., with 12 paper dryers of 5 ft. diameter.

For the Erste Ungarische Karton-Pappenfabrik, Budafok:
1 triplex pasteboard machine of 5 1/2 ft. working width.

For the Stabilimento Industriale Toscano per la lavorazione della carta, Florence:
1 paper machine for the production of papers glossed on one or both sides.

Finally an existing machine of 5 1/4 ft. working width is being reconstructed for Italy. The order includes a new wire part, a couching and wet press, two drying cylinders, one of which is designed for one-sided gloss.

Our pump department has received a number of orders, of which the following are of interest:

For the S. A. Bonifiche e Irrigazioni Torino in Rondissone, three irrigation pumps, each for a manometric head of 109 ft. and a water volume of 167 gals/sec. at an output of 403 HP.

For the AEG in Rio de Janeiro, for the Fluminense plant, two dredger pumps, each for a manometric head of 106 ft. and a water volume of 140 gals sec. at an output of 340 HP.

For the Ministry of Public Works in Cairo, for the Maghagha plant, two drainage pumps, each for a manometric head of 12 ft. and a water volume of 445 gals/sec. at an output of 122 HP.

For the Dortmunder Wasserwerks Gesellschaft m. b. H. in Dortmund, for the Westhofen plant, two water supply pumps, each for a manometric head of 314 ft., one of which delivers 80 gals/sec. at an output of 578 HP, and the other 45 gals/sec. at an output of 321 HP.

Publishers: Escher Wyss & Co, Zurich (Switzerland).
Printed by: Siegfried & Co., Zurich (Switzerland).
London Office: Escher Wyss & Co., 20 Grosvenor Gardens, Westminster, London S. W. 1.
Tokyo Office: Escher Wyss & Co., Marunouchi Building, Room 322, Tokyo.

Digitized by Google

Ja 8'31

ESCHER WYSS NEWS

Volume I

3

May 1928

Published by Escher Wyss & Co. S. A.

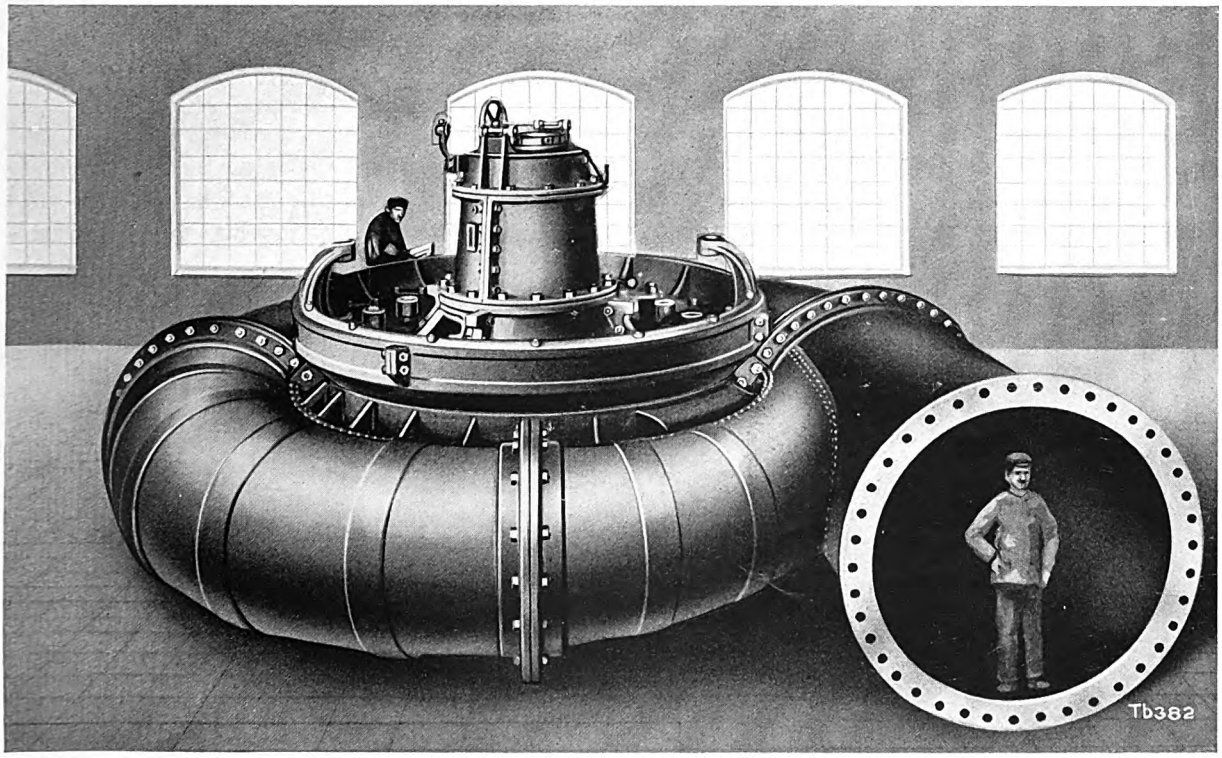

One of the two storage pumps of the Hemfurth Power Station (Eder Valley Barrage).
Water quantity 3045 gals/sec. Head 124 ft. Power consumption 8350 HP.

Contents

	Page
1. Questions bearing on the storage of hydraulic power by means of storage pumps	63
2. The introduction of the Escher Wyss rotary valve and its subsequent development	77
3. The water turbine installations at Inawashiro (Japan)	84
4. The Zoelly steam turbine and its recent development (continuation 1)	86
5. The Zoelly steam turbo-locomotive (continuation 1)	95
6. Electrical welding of thick bodies	100
7. Miscellaneous	104

AGENTS FOR UNITED STATES
THE NATIONAL POWER MACHINERY CORP.
2912 CHANIN BLDG., NEW YORK

Digitized by Google

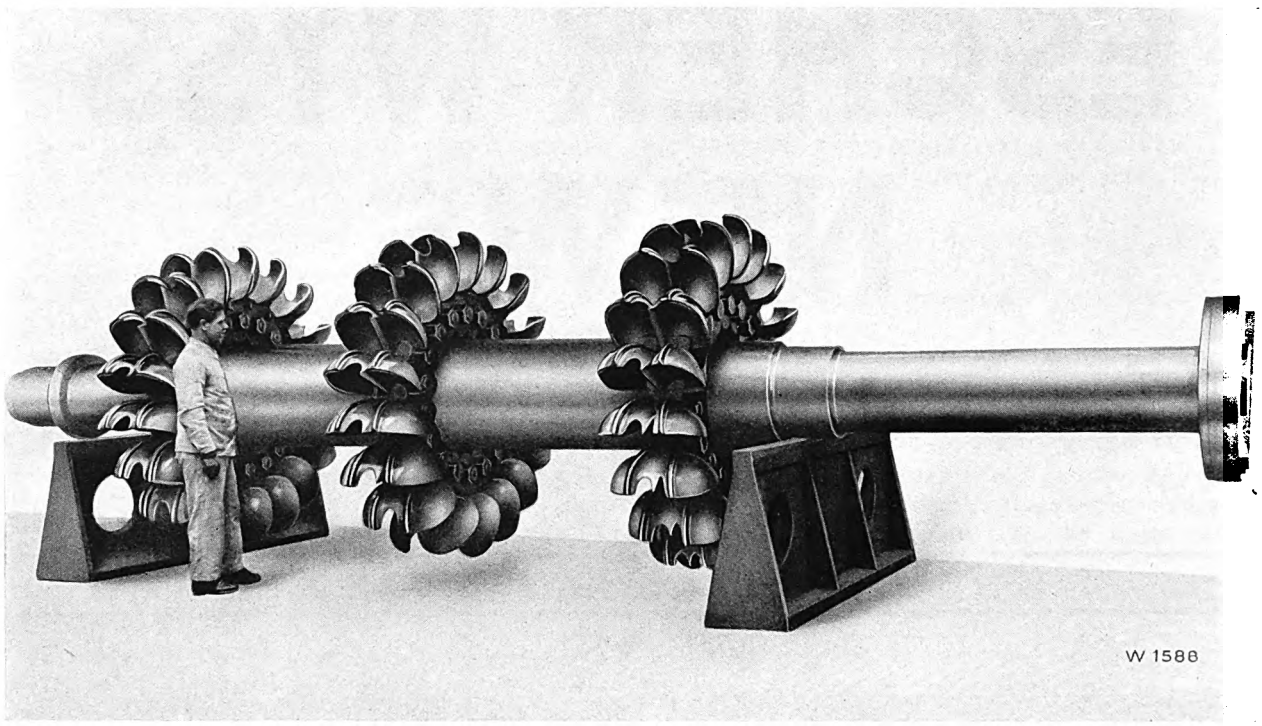

Schwarzenbach Power Station in Baden (Germany). Runner wheels of the 27.500 HP turbine.

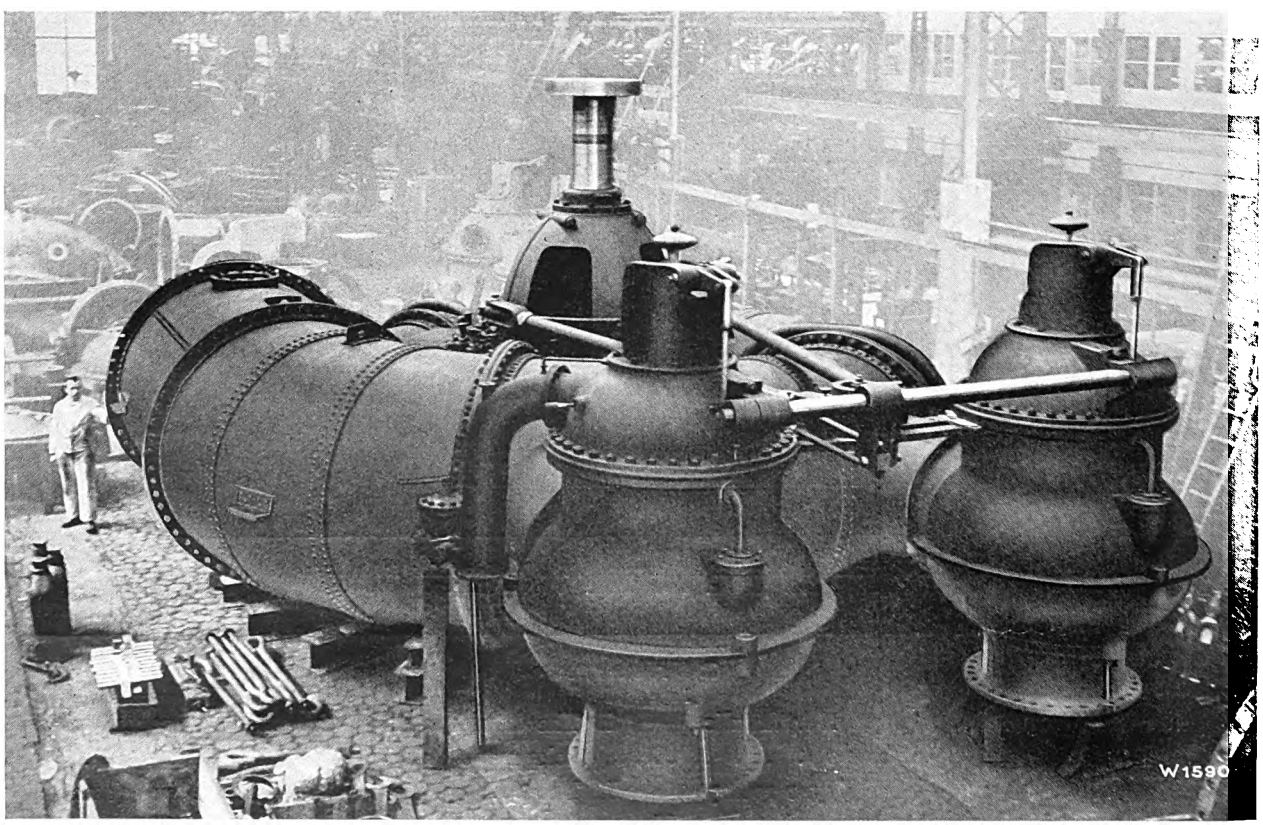

Ujigawa Power Station (Japan),
Spiral turbine with vertical shaft and 2 pressure governors. Output 17.000 HP under a head of 151 ft.

Digitized by Google

ESCHER WYSS NEWS

PUBLISHED BY MESSRS. ESCHER WYSS & Co. S. A.

VOLUME I — No. 3 — MAY 1928

The „Escher Wyss News" will be published periodically in bi-monthly issues. Reprinting of articles or illustrations appearing therein will only be permitted when source thereof is duly acknowledged. Single numbers 1/-; one year's subscription 5/-.

Questions bearing on the storage of hydraulic power by means of storage pumps.

By G. Kühne.

Paper read on December 7th, 1927, before the members of the Deutsche Wasserwirtschafts- und Wasserkraft-Verband in Baden.

The last few years have evinced an unparalleled development of storage pump design. Some years ago the largest pumping unit had a capacity of 4500 HP, but in 1925 the 10 000 HP pumping set of the Schwarzenbach Power Station owned by the Badische Landes-Elektrizitäts-Versorgungs-A.-G. and in 1926 the 13 500 HP pumping set of the Tremorgio Power Station, owned by the Officine Elettriche Ticinesi S. A. in Bodio (Switzerland), were successfully put into service. Since then, the development has gone on apace and has attained a certain culminating point in the Power Storage Station Niederwartha, owned by the Energie-Versorgung Gross-Dresden A.-G., which when fully equipped will have a total pumping capacity of 162 000 HP. Still larger plants are being planned with pumping units of up to 60 000 HP, a proof of the outstanding importance attached to the storage of hydraulic energy for electricity supplies. The design of such huge units confronts the engineer with tasks, which can only be solved with the requisite degree of safety on the basis of wide experience gained from plants already manufactured and from the continuous testing of new ideas.

Absolute reliability in service coupled with minimum attention and maximum efficiency are the essential features of such plants.

The solution of the problems involved will be rendered clearer by the following description of the two largest storage pump plants, which have so far been put into service, viz. the Tremorgio Power Station and the Schwarzenbach Power Station, both of which were designed and supplied by Messrs. Escher Wyss & Co.

Both plants have one feature in common, viz. that only one pumping set was to be supplied for each plant and consequently the pumps had to satisfy, especially in the case of the Tremorgio Works, very stringent requirements with regard to efficiency at partial loads owing to the fluctuations of the energy supply.

In this station, with a load fluctuating between 4000 and 10 000 KW, the problem was solved by coupling the motor-generator by means of a gear to two pumps of similar design, which operate quite independently of each other, each pump being calculated for a capacity of 91 gals/sec against a head of 3035 ft. at 1000 r. p. m.

The advantages accruing from such an arrangement may be gathered from the performance diagram, Fig. 1. When employing one single pump, the efficiency at half load is 62.5 per cent, at quarter load, 36.5 per cent.

Assuming a full load efficiency of 80 per cent, if the pumping unit is subdivided, and the one half is switched off, the half-load efficiency attains the full value of 80 per cent, whilst the quarter-load efficiency is 62.5 per cent. The saving in power is shown by the hatched surface.

AGENTS FOR UNITED STATES
THE NATIONAL POWER MACHINERY CORP.
CHANIN BLDG., NEW YORK

Digitized by Google

The gear loss, which for such large sets amounts to only 1 to 2 per cent, may be neglected since the speed of the pumps may be chosen independently permitting the most advantageous hydraulic conditions being selected for obtaining the highest pumping efficiency. This subdivision of the pump suction pipes of the pumps are equipped with strainers to prevent the entrance of foreign bodies.

Owing to the exceedingly high head of 3035 ft., the design of the valve gear of this plant required special attention, since the safety in operation primarily depends on this point.

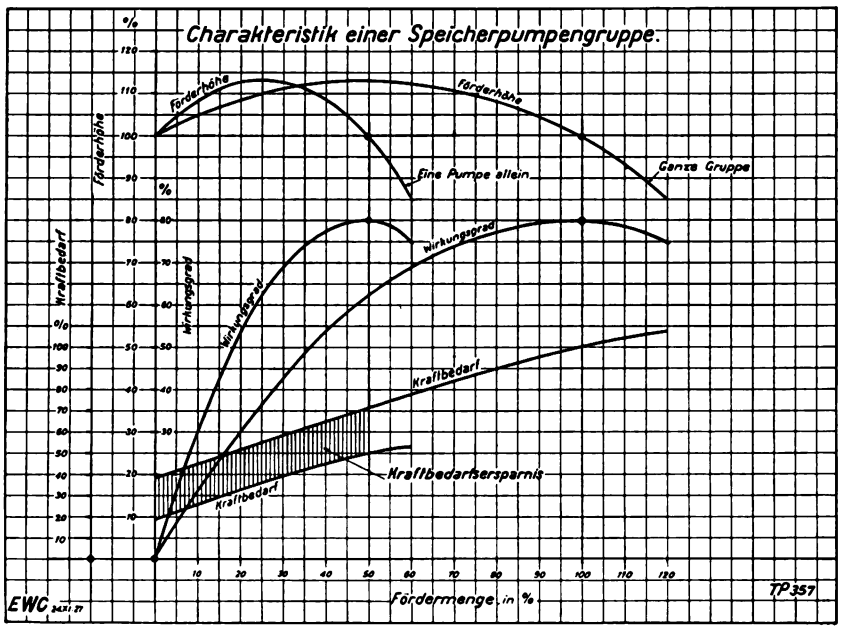

Fig 1. Diagram of a duplex pump set with one disconnectable pump.
Characteristic of a storage pump set.
Kraftbedarf = Power consumption; Förderhöhe = Head; Wirkungsgrad = Efficiency; Eine Pumpe allein = One pump only; Ganze Gruppe = Complete group; Kraftbedarfsersparnis = Saving in power; Fördermenge = Water volume in %.

offers the further advantage that a stand-bye of one-half of the capacity is available and the dimensions of the casing can be reduced, a very welcome factor in view of the high pressures involved. Even with the reduced dimensions, the test load of the cover of a casing amounted to no less than 1300 tons.

Figs. 2 to 4 are a longitudinal section, cross section and plan of the machine room of the Tremorgio Power Station.

The gear is coupled to an Escher Wyss Pelton turbine by means of a mechanical clutch, which may be engaged or disengaged when the set is shut down. One of the pumps is permanently coupled, whilst the other may be electrically coupled or uncoupled when the set is running.

The oil reservoir of the gear is situated in the basement, likewise the oil cooler and the electrically-driven auxiliary pump for supplying oil to the gear teeth and bearings of the gear and pumps. The pressure piping of the pumps including the stop valves is also located in this basement and underneath these lies the suction chamber. The

The stop valves serve the two purposes of regulating the quantity of water delivered and of safeguarding the plant if for some reason the delivery of the pumps fails. The solution of this latter problem played a prominent part in the Tremorgio plant inasmuch as the pressure piping at all events had to be protected against any increase in pressure.

With centrifugal pumps, it is standard practice to provide a reflux valve of the design shown in Fig. 5. which prevents the reverse flow of the water from the pressure piping. Whilst the pump delivers water, the flap takes up the position indicated by the dotted lines. As soon as the delivery ceases the flap drops on to the seat and thus closes the pipeline.

In order to correctly appreciate what really happens when the flap closes, we must consider the flow conditions in the piping. As long as the pump is working normally, a certain quantity of water is constantly flowing through the piping and the whole column of water executes a uniform movement towards the reservoir. However, as soon as the pump

Digitized by Google

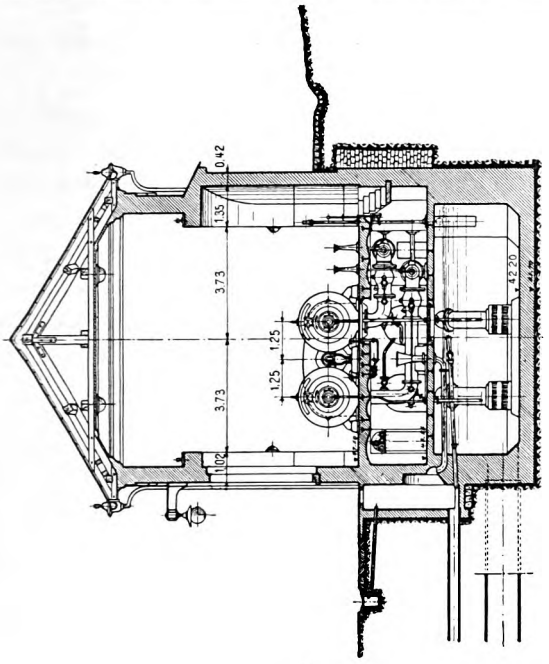

Fig. 3. Cross section.

ceases to function, the column of water in the pipeline, owing to its inertia, will temporarily continue to move in the same direction. For this reason a reduction of the pressure must ensue at that point where the water supply first fails, i.e. directly between the pump and the pipeline. This pressure reduction will attain a maximum value the moment the upward movement of the water column ceases. The reversal of the flow will be followed up by a renewed increase in pressure at the pump and this will attain a maximum value as soon as the flow towards the pump has ceased. In other words, a sinucoidal oscillation is generated, which is continued until the inertia of the moving water mass is spent.

If the reflux valve is to perform its duty in the most efficient manner, it must be completely closed before the increase of pressure commences in the pipeline adjacent to the pump, i. e. the flap, after passing

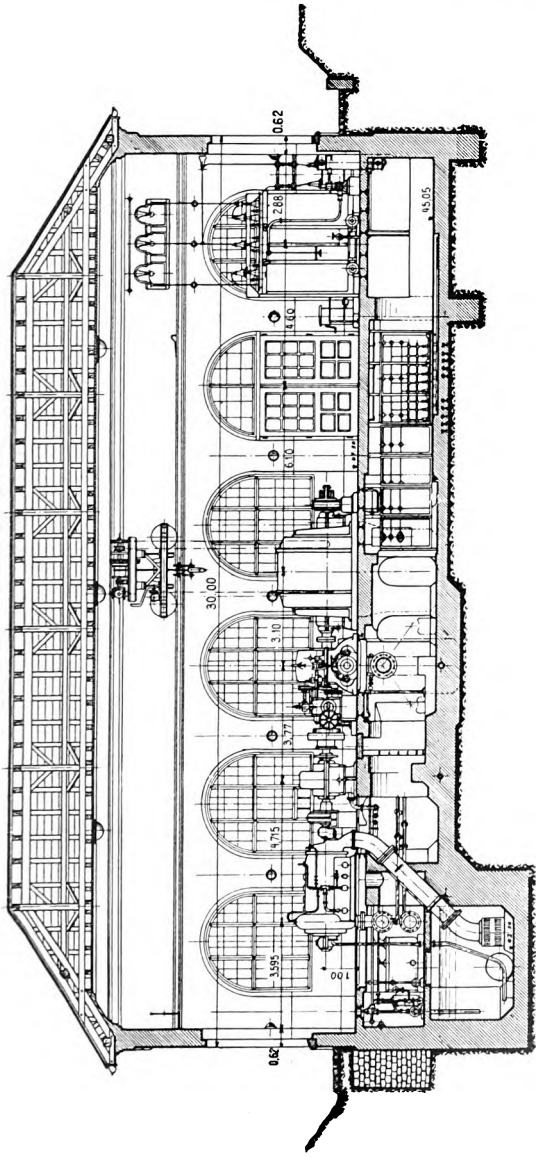

Fig. 2. Longitudinal section of the machine room of the Tremorgio Power Station; the high-pressure pumps are seen to the left.

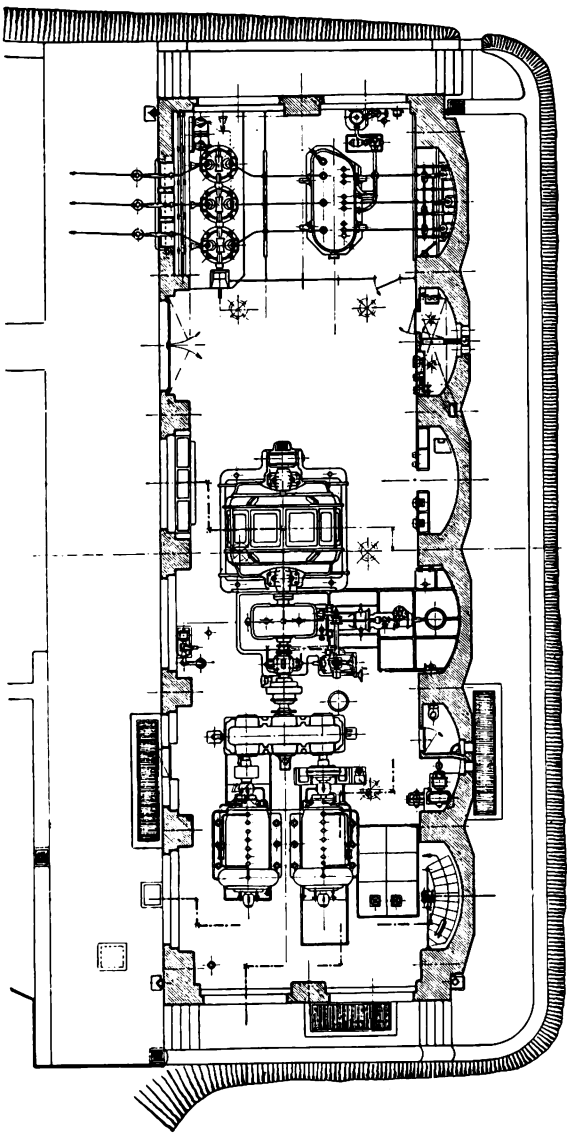

Fig. 4. Plan of the machine room of the Tremorgio Power Station.

Digitized by Google

through the first quarter of the cycle must close. Should the flap close later, for instance shortly before the oscillation attains its maximum value, the flap is suddenly thrown against its seat and an increase of pressure ensues, which may be many times greater than the normal increase in pressure connected with the oscillation of the water column.

It is a very interesting matter to investigate the phenomenon in pipelines by taking pressure measurements. For this purpose, switching-off tests were made on a plant equipped with such reflux valves, in such a manner that one or two pumps, connected to the same pipeline, were disconnected, in the one instance with the reflux valve in position, in the other after removal of this valve.

The diagram, Fig. 6, illustrates this phenomenon when one pump was switched off. The percentage pressure fluctuation, referred to the operating pressure of 100 per cent before switching off, is plotted as a function of the time, in the upper diagramm with the reflux valve in position. In this case the decrease in pressure amounts to 73 per cent and the increase in pressure 80 per cent.

Within the interval of time in which the diagram was recorded, only a very slight damping of the oscillation occurred and consequently the increase of pressure is correspondingly high.

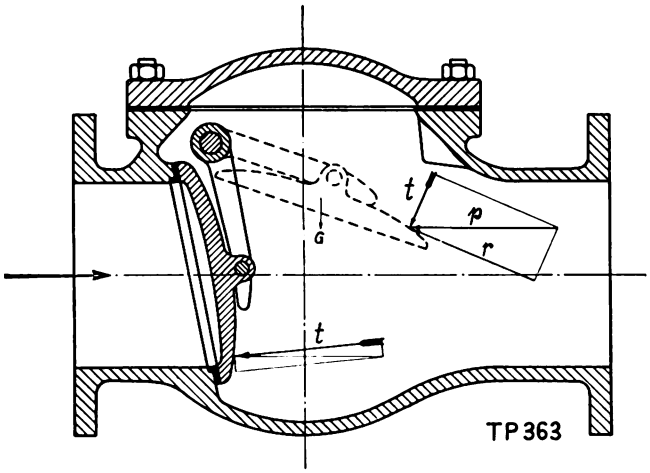

Fig. 5. Usual flap valve.

The lower diagram shows that the conditions are completely altered when the valve is removed. The drop of pressure is about the same, but the pressure increase now only amounts to 46 per cent. In addition, the period of oscillation is considerably increased and the damping is so pronounced that the pressure fluctuations have subsided after the lapse of 20 seconds.

Fig. 7 illustrates the conditions of the oscillation when two pumps are switched off. The negative amplitude increases both in the upper and lower diagrams, whilst the positive amplitude is smaller than when switching off one pump alone, both with the valve in position or with the valve removed. This may probably be ascribed to the fact that with higher velocities, the increased pipe friction losses damp the rise in pressure.

The results of the tests clearly demonstrate that it would be advantageous to reject the reflux flap valve altogether. Under these conditions it would only be necessary to provide an hydraulically controlled stop valve, which would automatically close the pipeline when the pump pressure fails and would prevent the water flowing back through the pump and driving it as a turbine.

However, for the Tremorgio Power Station a double safety device at the pump was stipulated. In view of the high head, the quantity of water countained in the pipeline of 4950 ft. length, even after closing the throttle valve in the water chamber, would in the event of a fracture of the piping between the pump and the stop valve cause an enormous amount of damage. For this reason a stop valve and special reflux valve were provided.

The normal flap valve with fulcrum on one side, as depicted in Fig. 5, appeared to be too dangerous, since with such a valve the path to be travelled by the flap before completely closing the pipeline is long and in addition the increased danger exists that the flap under the influence of the flow might commence to close too late.

In view of these disadvantages a valve designed with an oscillating plate was employed, see Fig. 8. This illustration diagrammatically illustrates the complete valve gear control supplied by the von Roll Iron Works, and shows that flap 1 is suspended in a parallelogram and is central to the pipeline. This arrangement offers the advantage that the distance from the flap seat is approximately the same for the whole periphery, and the pressure due to velocity in case of a decrease of pressure at the pump at once becomes effective with its full force. The flap, therefore, under any condition must follow the force tending to close it. The only danger is that when a long travel is employed, it may strike the seat too violently. This, however, can be reme-

Digitized by Google

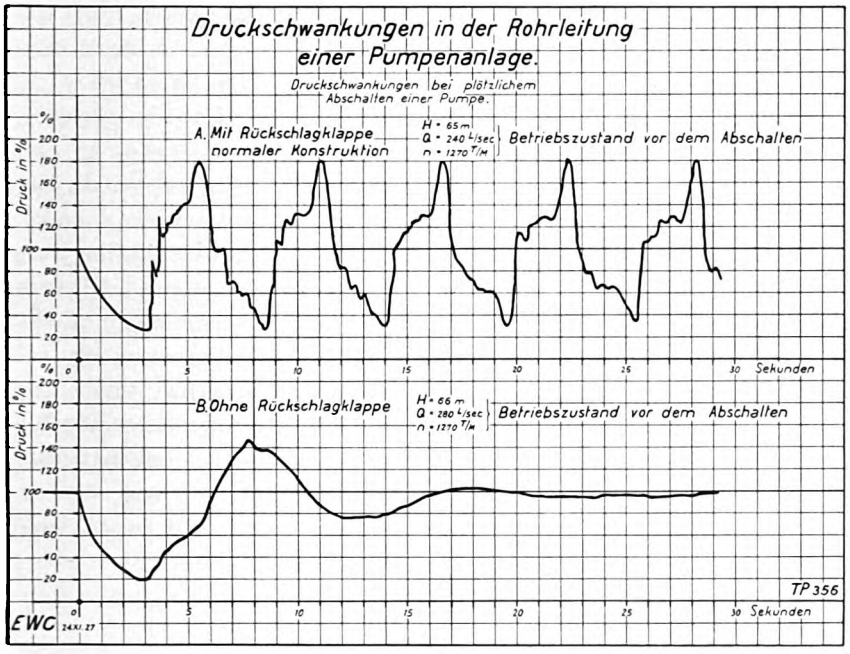

Fig. 6. Switching-off diagrams of a single pump.
Druckschwankungen in der Rohrleitung einer Pumpenanlage = Pressure fluctuations in the pipeline of a pumping plant; Druckschwankungen bei plötzlichem Abschalten einer Pumpe = Pressure fluctuations when suddenly switching-off one pump; Mit Rückschlagklappe normaler Konstruktion = With reflux valve of normal design; Betriebszustand vor dem Abschalten = Service conditions before switching-off; Ohne Rückschlagklappe = Without reflux valve; Druck = Pressure; Sekunden = seconds.

died by artificially loading the flap by means of a rod 2, which is acted on by a spring. By correctly designing the tension of this spring, it is possible to adjust the flap in such a manner that it opens only a fraction of its normal lift when in service. The degree of this lift is only dependent on the loss of head which can be permitted. For a head of 3035 ft., as in the case in point, the loss of a few feet of head is quite immaterial, so that the lift may be kept very small. By reducing the lift, quick closure of the valve is ensured and in addition the spring loading protects the flap from undue oscillation.

It has long since been standard practice to provide flap valves with a bye-pass 3 arranged in such a manner that the piston valve 4 inserted in this bye-pass is positively controlled by the service conditions obtaining at the pump, i. e. that whilst the pump produces pressure, the piston valve opens, and that the closing movement only starts when the pressure in the pump decreases. By providing a suitable restriction it is possible to influence the closing movement of the bye-pass valve in such a manner that it only begins after the oscillations in the pipeline have ceased. The bye-pass permits water to flow out of the pipeline into the pump and thus prevents an excessive rise in pressure in the former. Nevertheless, such a device does not offer sufficient security in the case of a sudden increase in pressure. Such conditions cannot be compensated quickly enough through the bye-pass and may, therefore, under certain conditions attain values, which would seriously endanger the pipeline. In addition, the possibility that the bye-pass valve remains closed owing to a failure of the control gear must not be overlooked. For this reason, a special provision was made in addition to the bye-pass. In order to facilitate the rapid

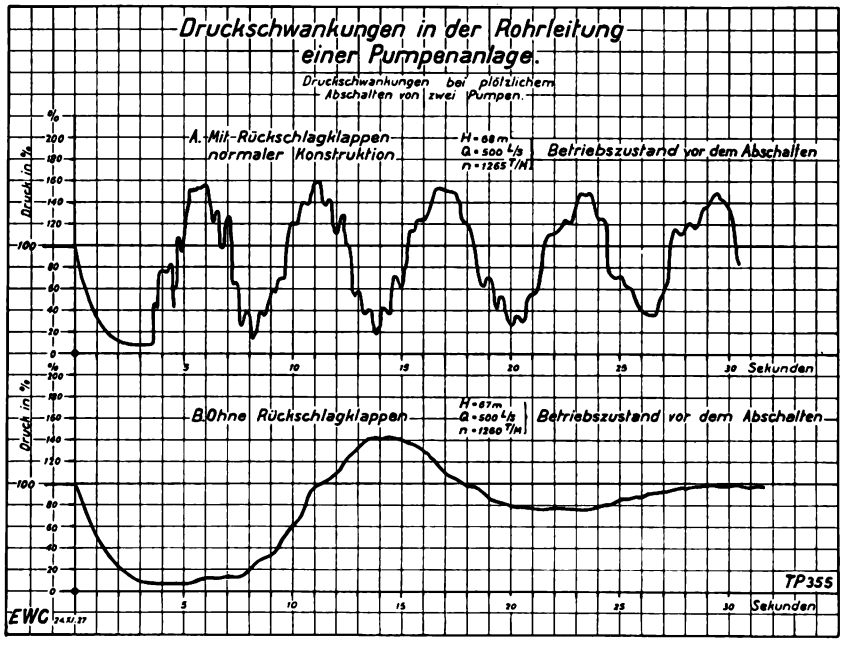

Fig. 7. Switching-off diagrams of two similar pumps.
Druckschwankungen in der Rohrleitung einer Pumpenanlage = Pressure fluctuations in the pipeline of a pumping plant; Druckschwankungen bei plötzlichem Abschalten von zwei Pumpen = Pressure fluctuations when suddenly switsching-off two pumps; Mit Rückschlagklappen normaler Konstruktion = With reflux valves of normal design; Betriebszustand vor dem Abschalten = Service conditions before switching-of; Ohne Rückschlagklappe = Without reflux valve; Druck = Pressure; Sekunden = seconds.

Digitized by Google

discharge of the water, reverse-flow nozzles 5 were provided in the flap valve, arranged in the direction of the flow, thus offering the least resistance to the flow of the water. It will be evident that the water will flow more quickly through these nozzles than through the bye-pass.

Apart from the flap valve, a hand-operated closing device 6 is provided in the pipeline of each pump, which serves to regulate the quantity of water delivered. This valve is so designed that it may be closed against the full pressure in the pipeline. In view of the high pressure, a balanced annular piston valve was adopted, the design of which is shown in Fig. 8. The piston valve seals at the seat 7 and opens the slots 8 situated around the periphery when an opening movement is initiated.

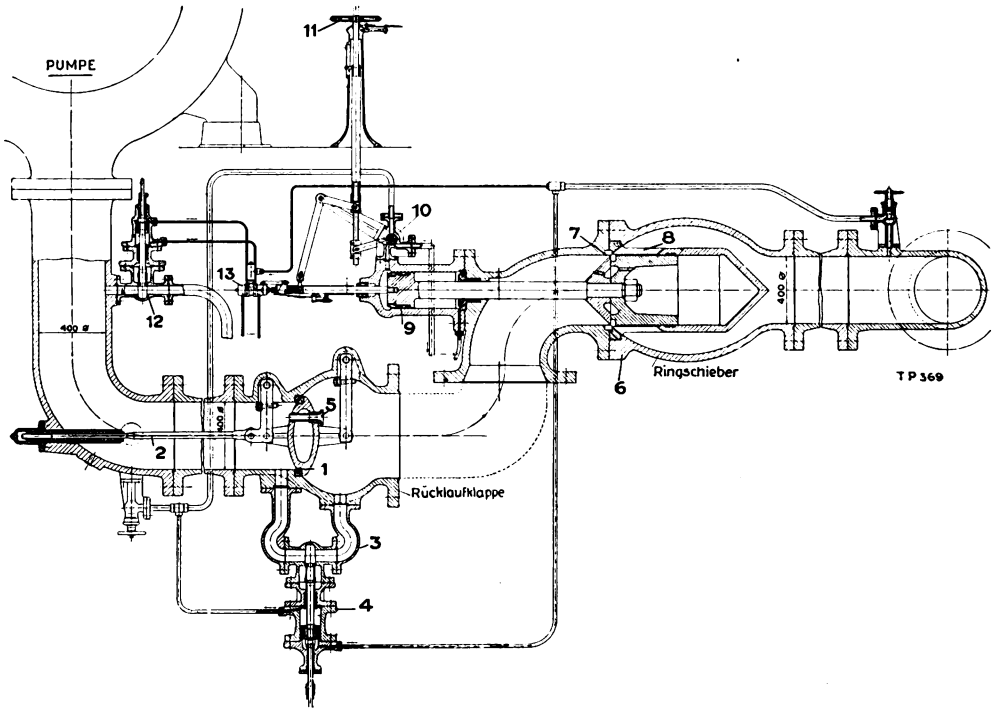

Fig. 8. Schematic diagram of the closing mechanism of one of the pumps for the Tremorgio Works.
Pumpe = pump; Rücklaufklappe = reflux valve; Ringschieber = piston valve.

This piston valve is operated by means of a control piston 9, which on its outer side is influenced by the pressure of the pump. The piston valve can only be opened when the pressure produced by the pump is transmitted to the piston by means of the control valve 10 operated by the handwheel 11. So long as no pressure is produced by the pump, the piston remains in the closed position since the pressure acting from inside on the free cross-section of the piston rod suffices to close the valve.

If the cross-section of the reverse flow nozzles in the flap valve is so dimensioned that there is a sufficient drop of pressure in the pipeline at the pump end, the annular valve closes automatically. The time required for closing may be adjusted by means of a diaphragm. Such a drop in pressure always occurs when the pipeline at the pump end bursts and the piston valve then closes automatically and thus protects the plant against serious damage.

The only drawback of the nozzles in the flap is that a certain quantity of water is wasted before the piston valve closes. The cross-section of the nozzles is so dimensioned that the pumping set cannot race whilst running as a turbine under the influence of the reverse flow. It is quite conceivable to devise a contrivance, which would automatically close the nozzles after a certain time has elapsed. The nozzles may thereby be grouped in a circle around the seat of the moveable flap and be closed by a rotary piston or the like.

It is also possible to close the circular valve under the influence of the pump pressure by automatically reducing the pressure in the servomotor cylinder, or by reducing the speed.

A further appliance, which is of great importance for all pumps of high capacity is connected with the valve. If a centrifugal pump starts against a closed valve in the pipeline, the total input energy is transformed into heat and even after the lapse of a very short time excessive heating of the machine may

Digitized by Google

set in. To avoid this, it is essential to allow part of the water to escape and in this manner to carry away the heat produced. In the Tremorgio plant this is achieved by means of an hydraulically-operated no-load valve 12. This valve is controlled by an auxiliary apparatus 13, which is connected to the levers of the main valve. The control operates in such a manner that when the main valve is closed, the no-load valve is permanently open, and closes automatically when the pump delivers water.

When the machine starts, a certain quantity of water will permanently escape through the no-load valve and the machine is thus effectively protected against heating, even when the starting should for some reason or other require more time than usual. As soon as the main valve opens, the control mechanism connected with the piston rod operates a valve, which causes the no-load valve to close. Vice versa, this valve will open the no-load valve when the main valve closes. The machine is, therefore, automatically protected against dangerous heating.

The pumps have one-sided admission and at the last pressure stage they are fitted with a balancing device according to the Escher Wyss system, as shown in the sectional drawing, Fig. 9. In the axial clearance of the thrust balancing device a pressure of nearly 1280 lbs/sq. in. is destroyed and a dangerous condition might arise owing to uneven wear of the clearance surfaces due to the sandy water. Such a condition will immediately be noticed by an appreciable heating of the drain water from the balancing chamber. A thermostat is, therefore, provided in the discharge pipe, which opens the main switch of the motor-generator by means of a relay, and stops the machine as soon as the heating exceeds a predetermined limit.

The manipulation of this pumping unit is exceedingly simple as will be seen from the following description: After coupling the turbine, the first operation is to dearate the pump by means of the ejector fixed to the casing of the pump, shown in Fig. 10. Then the auxiliary oil pump of the gear located in the basement is started. When running it lights a pilot lamp situated near the turbine governor. Thereupon the turbine is started and the motor-generator synchronized on attaining the required speed. Finally load is applied to the pump by opening the stop valve in the pressure pipeline from one of the control stands shown in Fig. 11.

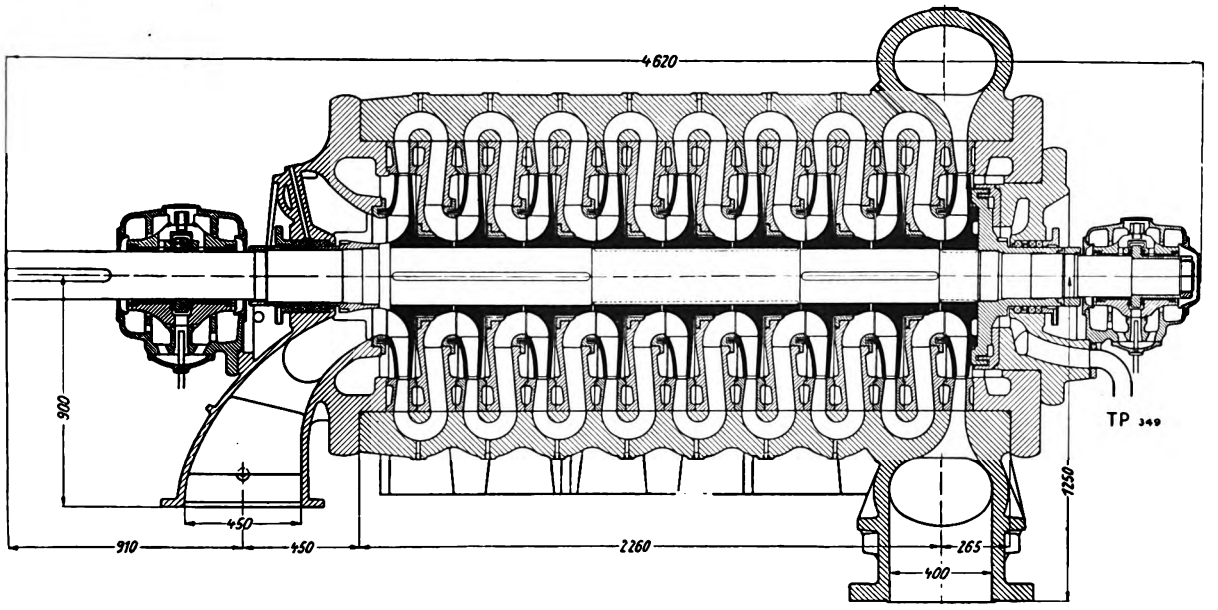

Fig. 9. Longitudinal section of one of the pumps for the Tremorgio Works.

The oil required for the gear and bearings is automatically cooled by the pump. Should for any reason the main oil pump fail, the motor of the auxiliary oil pump starts by reason of the reduction in the oil pressure and this pump then takes care of the oil supply.

The water level in the suction reservoir is controlled by a float and in addition an overflow is provided, which prevents an excessive rise in the pressure in the suction reservoir should too much water flow back from the pressure piping.

Digitized by Google

The reliability of the plant is exceedingly sound owing to the devices described above. After the plant was first put into commission numerous tests were made to check the proper functioning of the controls. The most interesting part of this work was the switching-off tests made in order to ascertain

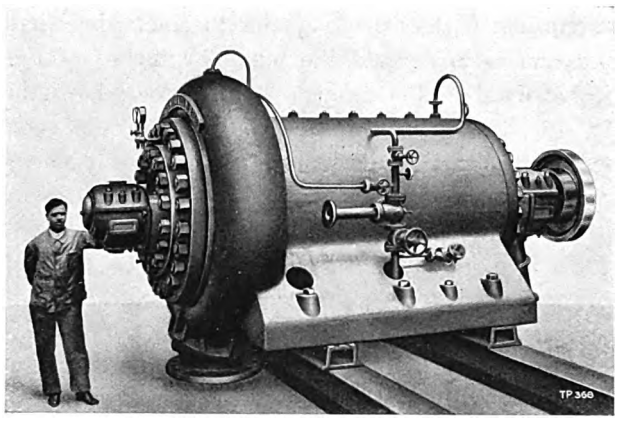

Fig. 10. View of one of the pumps for the Tremorgio Works.

the pressure fluctuations in the piping. Fig. 12 illustrates two characteristic switching-off performances at half load and full load, plotted as a function of time, in the one case with one pump and a power consumption of 5250 kW, in the other case with two pumps and a power consumption of

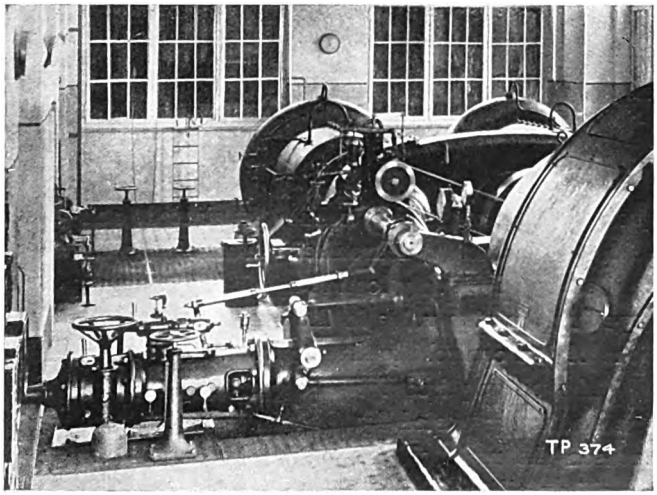

Fig. 11. Control stand of the machine set for the Tremorgio Works.

10 200 kW. The drop of pressure in the one case amounted to 22 per cent, in the other to 39 per cent, the rise of pressure being only 15 and 12 per cent respectively, which was considered exceedingly satisfactory.

Here again as in the case of the tests described at the introduction of this article, the more powerful damping effect is noticeable when switching off two pumps.

In the Tremorgio plant a flap valve could advantageously be employed since the dimensions of the valve were relatively small owing to the small volume of water. Other arrangements must, however, be adopted for plants dealing with large volumes, i. e. having larger cross-sections in the piping. With the first large storage pumps attempts were made to construct a device in the pipeline, which would improve the regulation of the delivery and at the same time prevent the reverse flow of the water in the event of the pressure of the pump sinking below the permissible limit. This device*), shown in Fig. 13, consists of an onion-shaped body, which may be moved within certain limits by means of a spindle. This causes a powerful throttling of the flow in the ring-shaped clearance and the output of the machine is thereby adjusted to the service requirements. The closing mechanism is designed in such a manner that the rod glides in a fork and the closing member is raised by the flow from the pump until the stop is reached. By this means when the pressure from the pump fails, the valve is pressed against its seat by the pressure in the pipeline and closes.

However, a disadvantage of this device, which must not be overlooked, is that the automatic movement of the spindle at the right moment can be retarded for some reason or other and the valve then closes at the wrong time.

Such valves have also been designed in such a manner that the valve bodies are prevented from instantaneously and automatically closing when the pressure at the pump is reduced. A free opening at the pump end is then created through which a stabilisation of the pressure takes place. The water column will, then, after the lapse of time flow in the opposite direction and a part of the water will flow back through the pump wheels. If the shut off device is then gradually closed by means of a control piston after the reverse-flow has commenced in the pipeline, this latter may be closed without causing a dangerous rise of pressure. The control mechanism must be capable of taking up the considerable forces acting during this process. Retarding the movement by means of compressed air has

*) See Schweiz. Bauzeitung. Volume 1920, page 132, Fig. 7.

Digitized by Google

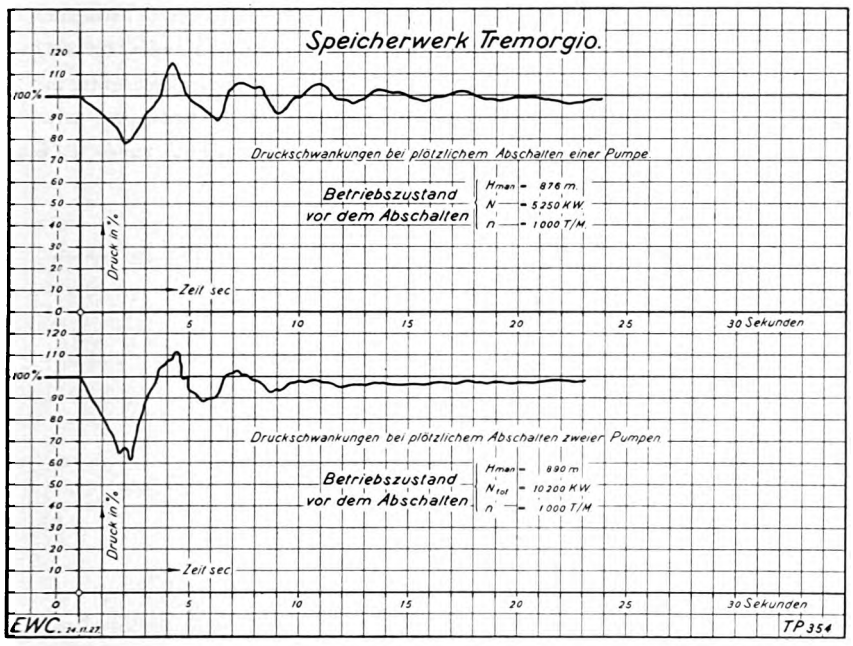

Fig. 12. Switching-off curves of the pumps for the Tremorgio Works.
Speicherwerk Tremorgio = Tremorgio storage plant; Druckschwankungen bei plötzlichem Abschalten einer Pumpe = Pressure fluctuations when suddenly switching-off one pump; Betriebszustand vor dem Abschalten = Conditions before switching-off; Zeit = Time; Sekunden = seconds; Druck = Pressure; Druckschwankungen bei plötzlichem Abschalten zweier Pumpen = Pressure fluctuations when suddenly switching-off two pumps.

not proved satisfactory so that lately hydraulic dashpots are employed.

It is, however, quite evident that such a device also has the danger, that in the event of a failure of the brake or a fracture of the rods, the valve would suddenly close, resulting in an equally sudden rise

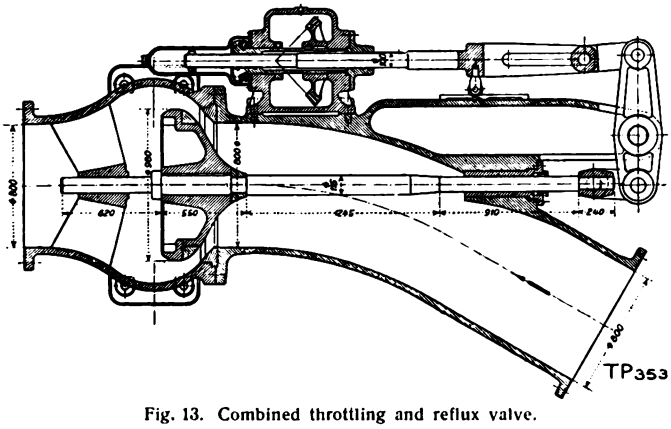

Fig. 13. Combined throttling and reflux valve.

in pressure possibly leading to a breakage of the pipeline or of the control apparatus.

The bye-pass with automatic closing mechanism which is provided would not suffice to compensate the sudden rise of pressure, and it might even occur that the bye-pass is not opened owing to a failure of the control mechanism.

Messrs. Escher Wyss & Co. were the first to introduce considerable improvements in this field, namely for the pumping set of the Schwarzenbach Works, in which adjustable guide blades were adopted operating in conjunction with the rotary valve. Figs. 14 and 15 illustrate the design of the machine in section. The pump has two stages, the wheels being arranged symmetrically, in the centre a runner wheel with double-sided admission and either side of this wheel a runner wheel with single-sided admission. This arrangement ensures the most favourable hydraulic conditions, since the clearance losses are reduced to a minimum and the glands are subjected only to the suction pressure of the pump. Furthermore the hydraulic axial thrust of the wheels is theoretically balanced. To correspond with the number of runner wheels, the pump is equipped with three guide wheels. The guide wheel blading facing the runner wheel is adjustable according to Escher Wyss & Co.'s patented system. By adjusting the angle of the blades, all possible blade positions from full admission to complete closure may be obtained. The design is such that a stationary part is attached directly to the adjustable part of the guide apparatus whereby a continuous guidance of the water in the diffusor is maintained for all positions. In Fig. 15, the adjustable guide vane is shown in its closed position (1), in the position for half admission (2) and for full admission (3). Such a guide apparatus offers the advantage that the efficiency of the pump at partial loads is considerably improved and that the impact losses, when the guide blades are closed, which otherwise occur with a stationary guide apparatus, are obviated. Consequently the power consumption when starting the machine is considerably reduced. A very important feature of this design is the possibility of being able to use this guide apparatus in the place of a reflux valve as a closing member when the pressure of the pump drops below that of the pipeline.

Digitized by Google

Both sides of the moveable guide blades are equipped with journals, those of the central guide wheel being coupled with the guide wheel journals on either side. On both sides of the pump the outer journals are provided with keyed on levers, which

Fig. 16 illustrates the control gear diagrammatically. To the right is seen one of the servomotors, and to the left, the regulating mechanism. The servomotor is operated by water under pressure, which is admitted or discharged by a control valve 1, the

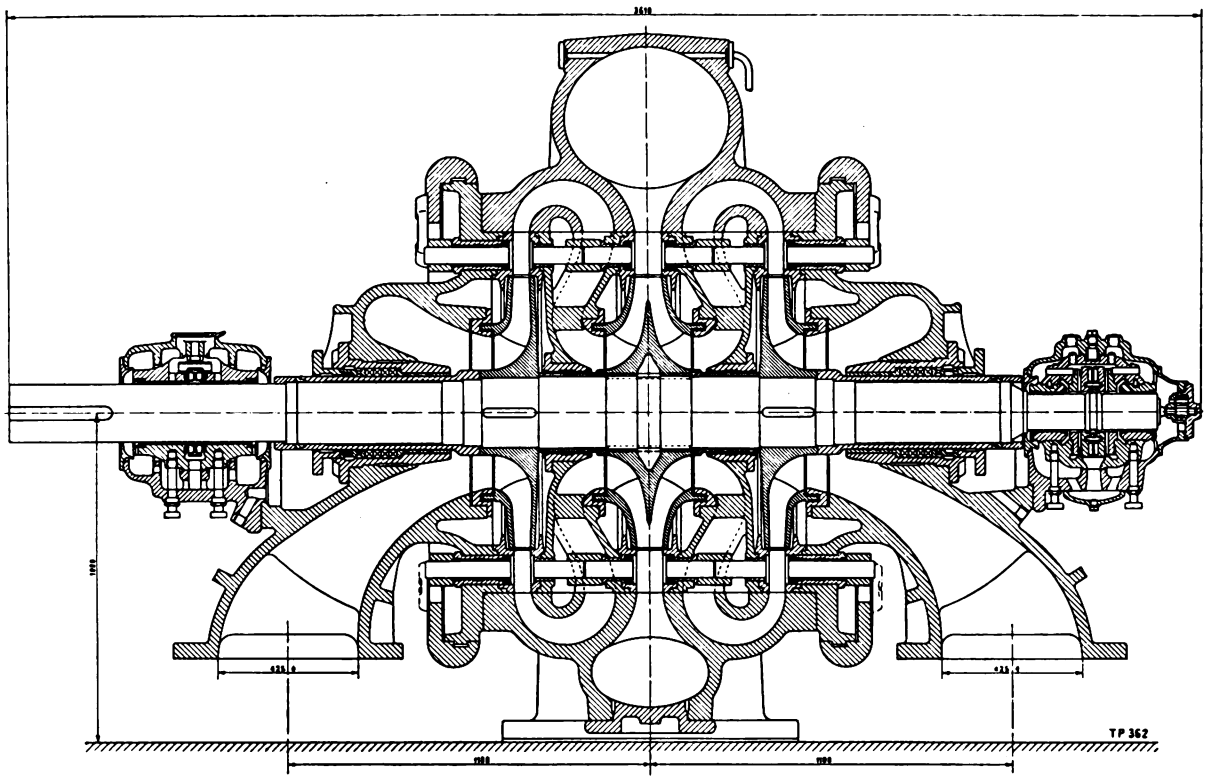

Fig 14. Longitudinal section of one of the pumps for the Schwarzenbach Works.

are connected by means of links with rotary regulating rings in the same manner as is adopted with water turbines. The regulating rings are moved in one or the other direction by an hydraulically operated servomotor. A device is also provided, which automatically closes the guide apparatus when the speed of the pump drops below a predetermined limit. In this manner a safety mechanism has been created, which is a complete substitute for the closing devices hitherto employed. The closing of the guide apparatus may be automatically controlled in such a manner that it is effected only after the oscillations in the delivery pipeline have ceased. In the event of a failure of the control it is not possible to close this mechanism since the pressure of the delivery pipeline tends to open the blades. This equipment so efficiently protects the plant that dangerous rises in pressure of the pipeline can never occur.

closing of the guide apparatus being performed when the servomotor piston rises. The control valve 1 is either operated by the handwheel 2 directly, or by means of an auxiliary motor 3, accentuated from the switch house so that the output of the pump and its energy consumption can be adjusted to the surplus power available. A relay serves for keeping the guide blades in the desired position. The control valve 1 is also influenced by 4, whose governor 5 is driven by a synchronous motor. When the periodicity of the network fluctuates, the governor tends to control the pump by closing the guide vanes when the frequency drops, and by opening them when the frequency rises. Governor 5 acts on piston 6 through the control valve 1. This piston operates with oil under pressure in such a manner that it closes the pumps independently of the service conditions on failure of the oil pressure. The necessary pressure oil is supplied by an auxiliary pump fixed

Digitized by Google

on the shaft of the storage pump. As soon as the speed of the storage pump decreases, for instance owing to failure of the current supply to the motor-generator, then the oil pressure of the auxiliary pump decreases and the governor closes the guide

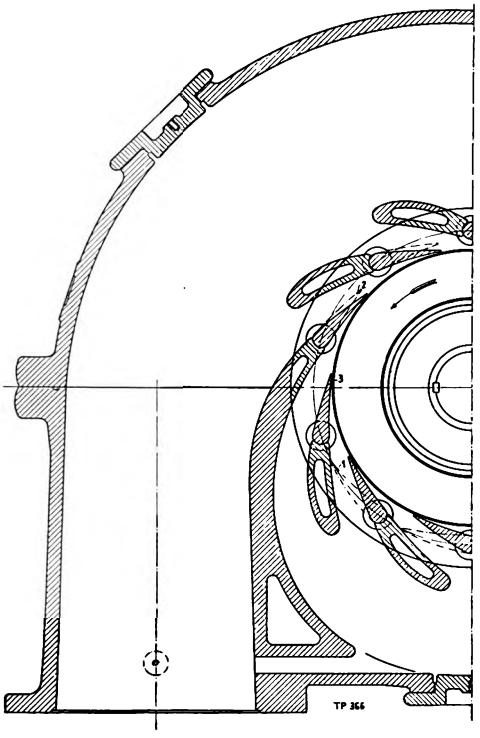

Fig. 15. Section through the centre guide apparatus of one of the pumps of the Schwarzenbach Works.

blades. The time required for closing may be adjusted as desired by means of restrictions in the oil passages. As soon as the piston of the servomotor reaches the end of its travel, it influences a valve 7, which is connected with the rotary valve in the pressure pipeline of the pump, Fig. 17, and thereby commences to close the same by means of the hydraulically operated servomotor 1. The latter by means of the rack 2 rotates the portion 3 of the valve and closes it. The sealing of the valve is effected by a disc 4 forming part of the rotary portion, which is pressed against the seat 5 by the pressure of the water in the pipeline. To open the rotary valve, this sealing disc must first of all be relieved of the pressure acting on it. This is effected by means of the bye-pass 6, which diverts the pressure produced by the pump to the reverse side of the disc.

The rotary valve in connection with the adjustable guide apparatus is an ideal closing device. Apart from the advantage of the uninterrupted flow of the water through the fully opened valve, the rotary valve offers the further advantage that it may be closed against the full pressure of the pipeline. This system was successfully adopted for the Schwarzenbach pump and later elaborate tests

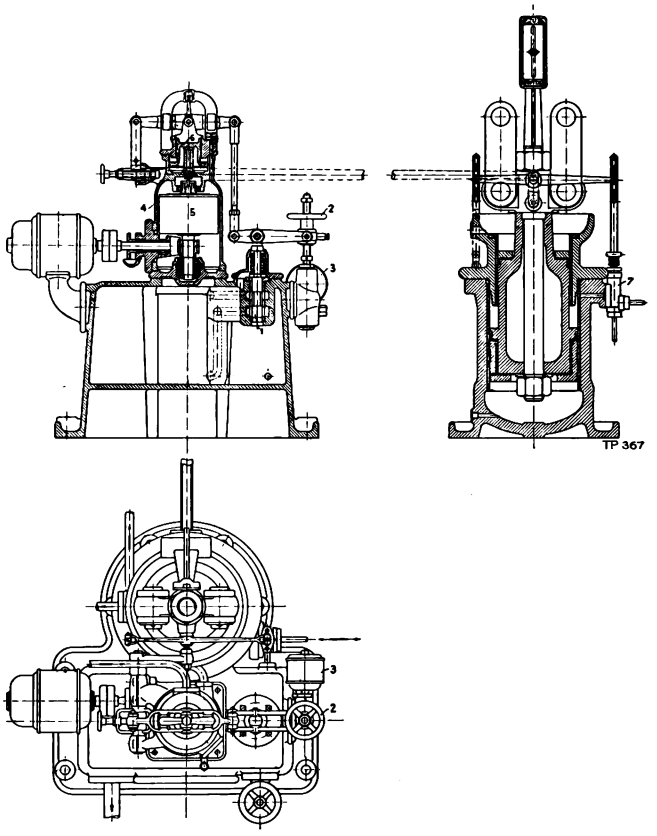

Fig. 16. Diagram of the control gear for the regulating mechanism of the pumps for the Schwarzenbach Works.

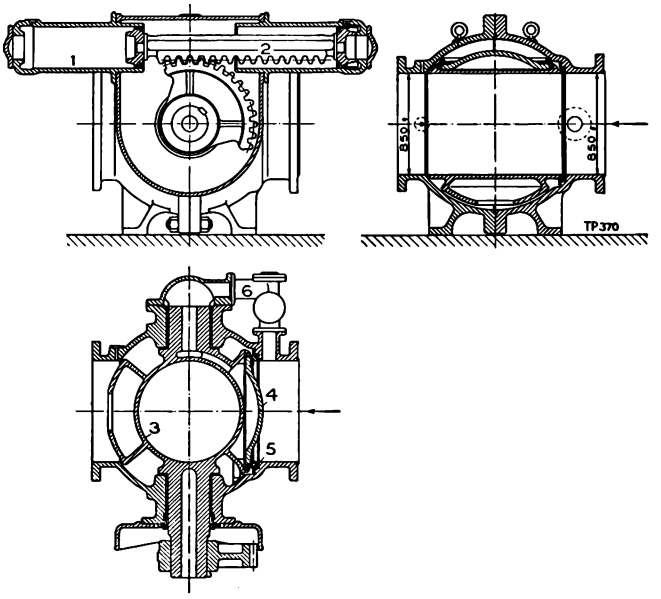

Fig. 17. Rotary valve of the pump set for the Schwarzenbach Works.

Digitized by Google

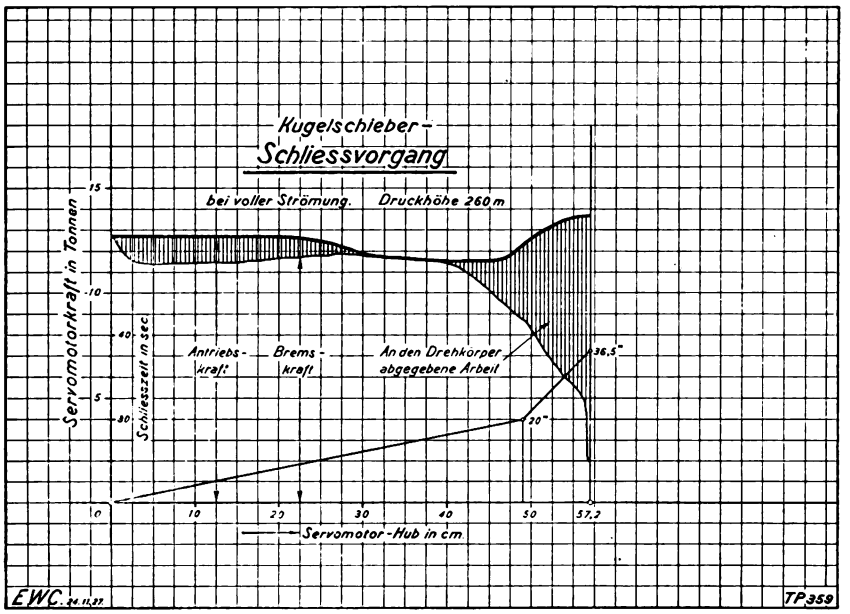

Fig. 18. Diagram showing the closing of a rotary valve under full pressure.
Kugelschieber-Schliessvorgang = Closing performance of a rotary valve; bei voller Strömung = at full flow; Druckhöhe = Head; Servomotorkraft in Tonnen = Servomotor power in tons; Schliesszeit = Time required for closing; Antriebskraft = Driving power; Bremskraft = Braking power; An den Drehkörper abgegebene Arbeit = Work given off to the rotary body; Servomotor-Hub = Servomotor stroke in centimetres.

were made in high-pressure turbine plants, during which the energy consumption of the servomotors was measured. Such a diagram is shown in Fig. 18. The energy consumption is plotted as a function of the turning movement. It is practically constant over the greater part of the stroke and increases only towards the end of the movement when the sealing disc of the valve commences to be pressed against its seat. One may, therefore, rely upon the pipeline being closed even when the closing movement of the guide blades should fail for some reason or other.

The arrangement of the complete machine is illustrated in the three drawings, Fig. 19. In the elevation and plan, the turbine is seen to the right, the motor-generator in the centre and the pumping set to the left. The speed of the motor-generator was fixed at 500 r. p. m. and the normal output of the set was stipulated at 500 gals/sec against a head of 760 ft. As the water flows to the pumps under a head of from 395 to 495 ft., the pressure in the casings may rise to about 1320 ft water column. The above-described design of a symmetrically built pump with double-sided admission, therefore, offered the advantage that the glands are only subjected to the suction pressure, which ensures the greatest reliability in service. In addition, the design permits the highest efficiency being obtained. The speed of the motor-generator being too low for the specified output, a gear had to be provided, and since the hydraulic conditions favoured a subdivision of the pump into two halves, two pinion shafts were adopted to which the pumps were connected by means of flexible couplings. The requisite distance between the shafts was obtained by interposing a transmission wheel rotating the pumps in opposite directions. Consequently the spiral casings could be placed in such a manner relatively to one another that the distance between shafts is a minimum. This resulted in a very compact design of the whole set, a necessity, since the whole group of machines is treated as a unit in practical service. Each of the two adjoining regulating rings, one to each pump, is operated by a common servomotor and both servomotors are accentuated by a single control device. The inlet piping and discharge piping are each equipped with a rotary valve and bifurcate only at the pumps.

The whole set is switched in or out when the motor-generator is at full speed by means of a magnetic clutch. This clutch is highly stressed since it has to bring the machine up to its full speed of approx. 1000 r. p. m. in about 10 seconds.

This requirement is fully met by means of the adjustable guide apparatus, since it considerably reduces the power consumption of the pump at partial loads, as compared with a pump with fixed guide apparatus. The guarantee (performance) curves, Fig. 20, illustrate the two cases in question. The head, efficiency and power consumption are plotted in thin lines as a function of the delivered water quantity, if the pump were equipped with a fixed guide apparatus. The heavy lines refer to a pump with adjustable guide apparatus. For each position of the guide blades a different head and efficiency curve is found, i. e. a multitude of lines, only five of which are shown for simplicity sake. At full admission, the curves are equal to those for the fixed guide apparatus. The pump works at the point of intersection of the curve representing head corres-

Digitized by Google

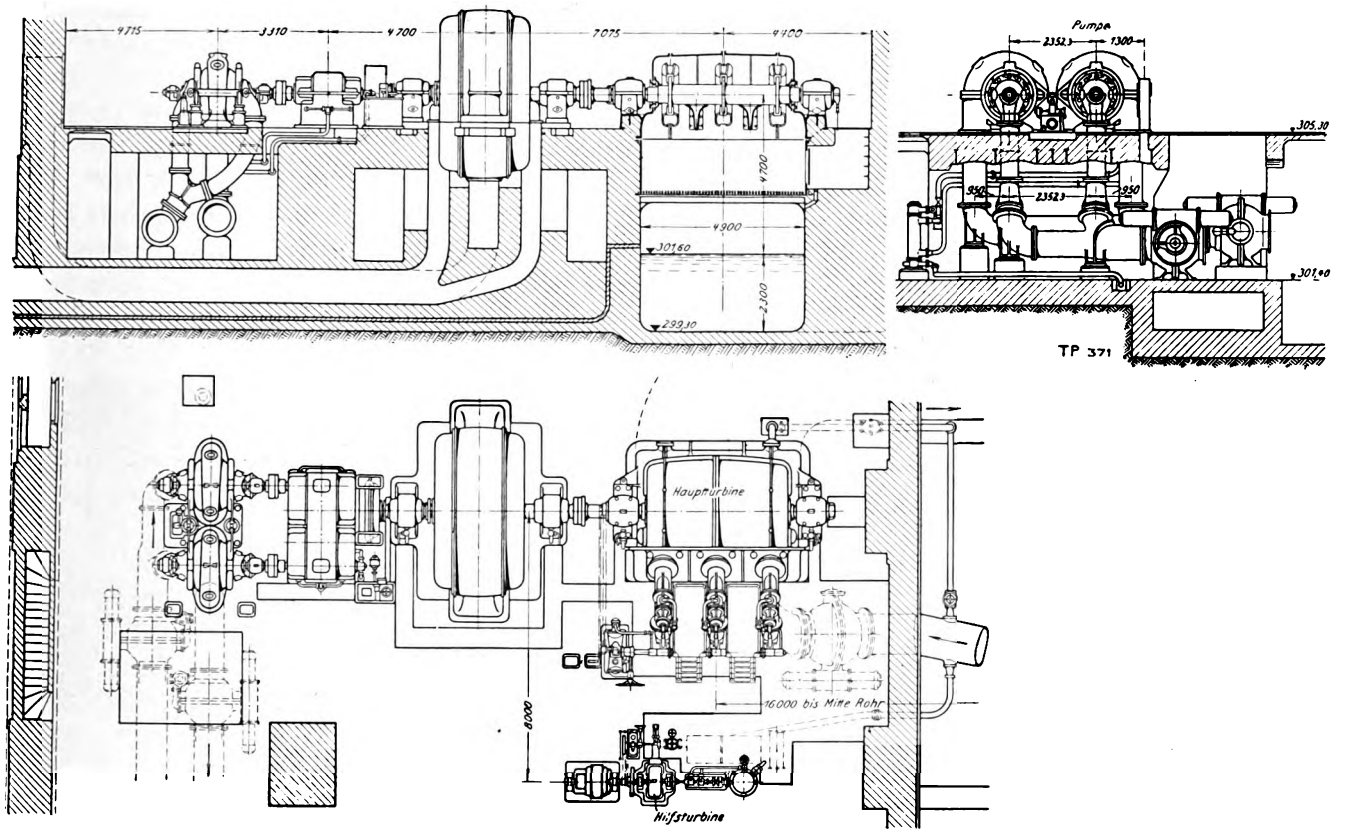

Fig. 19. Elevation, plan and cross-section of the Schwarzenbach Works.
Pumpe = pump; Hauptturbine = main turbine; Hilfsturbine = auxiliary turbine.

ponding to the admission, and the normal curve for head. Thereby, only the requisite pressure is produced and no surplus head has to be wasted as in the case of a fixed guide wheel. The gain is shown by the lower power consumption curve which is best seen in Fig. 21. In this curve the delivery at the calculated head of 760 ft. is plotted as a function of the power consumption. The gain is represented by the shaded triangle, showing both the guarantee values and the test results. The diagram, Fig. 22, illustrates in detail the results of the acceptance tests made with the set. The curves shown represent the direct readings without correction for the small fluctuations in frequency of the driving machine. As the head could be varied only within narrow limits, only comparatively short lengths of the head and efficiency curves could be obtained. The Q-H-curves pertaining to the different guide blade openings were interpolated from the guarantee diagram, Fig. 21, and likewise the inherent guaranteed efficiency curves. The power consumption curves were taken directly from the guarantee curve.

The test results, drawn in heavy lines, greatly exceeded expectations. Whilst an efficiency of 81 per cent had been guaranteed for the normal point, more than 85 per cent was actually obtained. The efficiencies at partial loads are also considerably better, so that the power consumption curve throughout lies below the guarantee. The power consumption when starting with closed guide wheel, guaranteed at 2500 HP, amounted to 2100 HP, i. e.

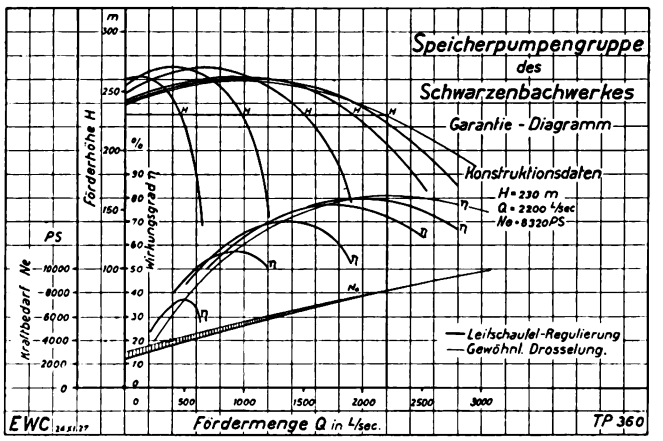

Fig. 20. Guarantee curves of the storage pumping set for the Schwarzenbach Works.

Garantie-Diagramm = Guarantee curves; Konstruktionsdaten = Constructional data; Kraftbedarf = Power consumption; Förderhöhe = Head; Fördermenge = Water volume delivered; Leitschaufel-Regulierung = Guide blade adjustment; Gewöhnl. Drosselung = Ordinary throttling.

Digitized by Google

to only 26.5 per cent of the power consumption at full admission, whilst with pumps with fixed guide apparatus under equal hydraulic conditions 35 to 40

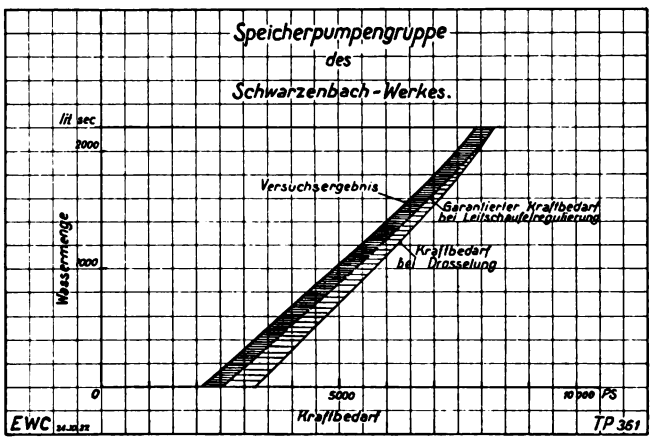

Fig. 21. Power consumption curves of the storage pumping set for the Schwarzenbach Works.
Wassermenge = Volume of water; Versuchsergebnis = Test result; Garantierter Kraftbedarf bei Leitschaufelregulierung = Guaranteed power consumption with guide blade regulation; Kraftbedarf bei Drosselung = Power consumption with throttling.

per cent is absorbed when working with the stop valve closed.

The handling of such a plant, if appropriately laid out and suitably equipped with automatic devices, is simplicity itself. These requirements are fully met in the Schwarzenbach machine. To start the set, all that is necessary is to open the rotary valve in the feed pipeline from the control stand on the machine house floor, to prime the pump and finally to switch in the magnetic clutch. The switching mechanism of the clutch is operated by a motor, which also drives the oil pump for the gear and pump bearings. The switching manoeuvre commences only after the oil has circulated sufficiently in the bearings and gears. As soon as the set has attained its designed speed, the rotary valve on the delivery is opened from the control stand and the pump loaded either by hand or from the switchboard. Fig. 23 shows the two control stands of the rotary valves with the starter for the magnetic clutch in the foreground. Fig. 24 shows the pumping set with the governor.

The method of construction adopted for the Schwarzenbach pump, as may be gathered from the above remarks, is a considerable advance chiefly because the employment of the adjustable guide blades by themselves solved the difficulty of the reflux valve and the adjustment of the delivery in an admirable manner.

This design has, therefore, become standard for the large plants in course of construction for the time being, and the 8350 HP pumps for the Hemfurth Power Station near the Eder Valley Barrage, as well as the 8000 HP pumps for the Leitzach Works of the City of Munich and the 27 000 HP pumps for the

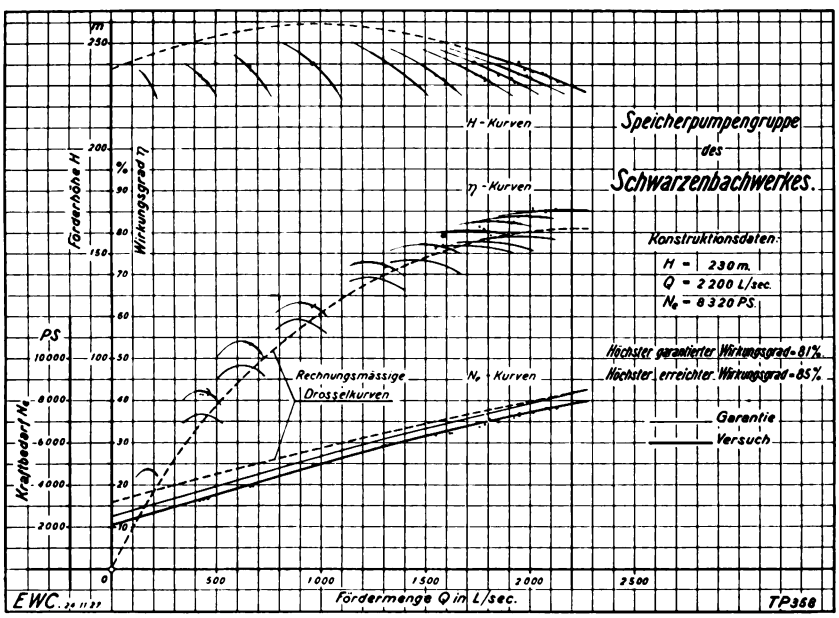

Fig. 22. Curves of acceptance tests of the storage pumping set for the Schwarzenbach Works.
Kraftbedarf = Power consumption; Förderhöhe = Head; Wirkungsgrad = Efficiency; Kurven = curves; Konstruktionsdaten = Constructional data; Rechnungsmässige Drosselkurven = Calculated throttling curves; Fördermenge = Water volume delivered; Höchster garantierter Wirkungsgrad = Maximum efficiency guaranteed; Höchster erreichter Wirkungsgrad = Maximum efficiency obtained.

Digitized by Google

Niederwartha Power Station will be equipped with adjustable guide apparatus operated in conjunction with rotary valves in the manner just described.

It must be specially emphasized that for high duty pumps the adjustable guide apparatus conjointly with the automatically governed rotary valve offers the only safe guarantee that the plant and especially the pipeline are protected against all service contingencies.

On the other hand these methods of construction can only be correctly applied when experience gained with similar designs has been appropriately utilized for new plants. Up till now Messrs. Escher Wyss & Co. alone possess this experience as a number of their pumps to these new designs have now been in successful operation for many years.

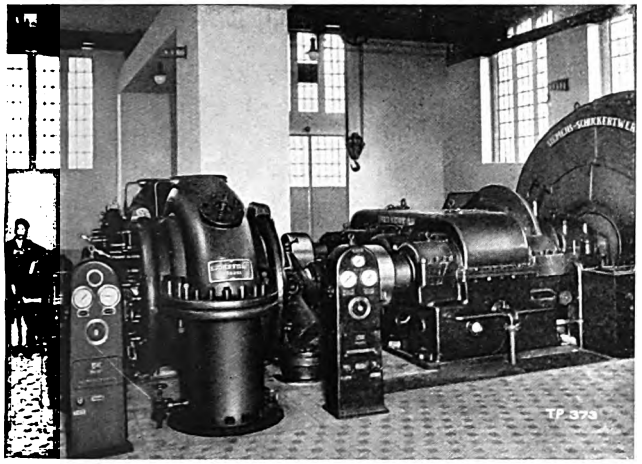

Fig. 23. Pumping set for the Schwarzenbach Works, viewed from the valve end.

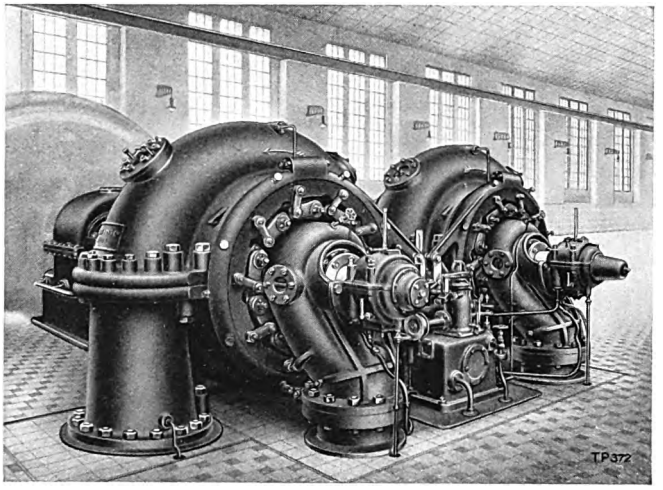

Fig. 24. Pumping set for the Schwarzenbach Works, viewed from the governor end.

The introduction of the Escher Wyss rotary valve and its subsequent development.

By Max Hirt.

The Escher Wyss rotary valve has already been described by a number of recent publications. The manufacture of this valve was commenced four years ago and it has since been very favourably accepted in practice. It may, therefore, be of interest to our readers to learn how the present design was developed, especially as a number of interesting intermediate types were designed, manufactured and tested. A later article will deal with some special designs of rotary valves, which were combined with some interesting control systems. To explain the present design, see Figs. 1 to 3, the following gives a brief description of the special features, which characterize the Escher Wyss rotary valve as compared with the valves used formerly for the same purpose.

The simplest type of valve, namely the throttle valve, Fig. 4, offers the undoubted advantage of space economy and cheapness. This advantage is, however, offset by the fact that such a valve can never be made perfectly water-tight, which excludes its employment for high pressures. The wedge-shaped gate valve, Fig. 5, on the other hand fully satisfies the requirement of perfect sealing — if properly designed

Digitized by Google

— but it has the disadvantage of requiring considerable head room for the raising of the gate. To this must be added the fact that the flow of water in such a valve is turbulent over an appreciable distance, which with the high water velocities employed nowadays in turbine pipelines, gives rise to eddying, pressure losses and erosion. At very high

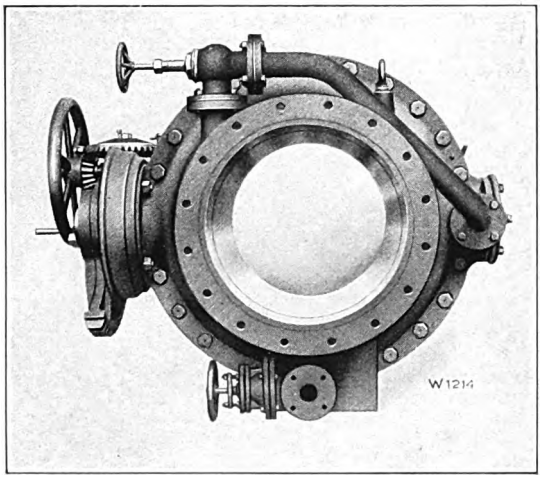

Fig. 1. The Escher Wyss rotary valve open.

pressures the use of such sluice valves even incurs a certain amount of danger insofar that when closing the valve without pressure on the reverse side of the valve, a possibility in turbine service, the sealing

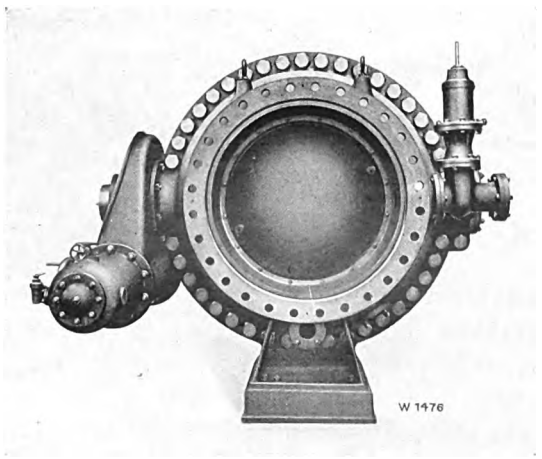

Fig 2. The Escher Wyss rotary valve closed.

rings may easily become damaged owing to the high specific pressures acting on them. This practically excludes the use of sluice valves in many cases, and it is obviated by the piston valve, Fig. 6, which has been adopted in a number of designs. Such an arrangement, however, has the disadvantage that the central portion disturbes the smooth flow of water and in addition the length of such a valve is excessive so that it is frequently a difficult matter to instal.

The Escher Wyss rotary valve overcomes all these difficulties whilst at the same time it offers numerous additional advantages. When closed, this valve is as water-tight as a sluice valve and when open, the flow of water is unimpeded, besides which the sealing rings are relieved of all pressure when moving the valve.

The attempts to create this new device, date back as far as 1915, and experiments were first of all made with a butterfly valve. The disturbance of the flow of the water when the valve was open, caused by the disc itself, was simply accepted as a matter of course, and all efforts were directed

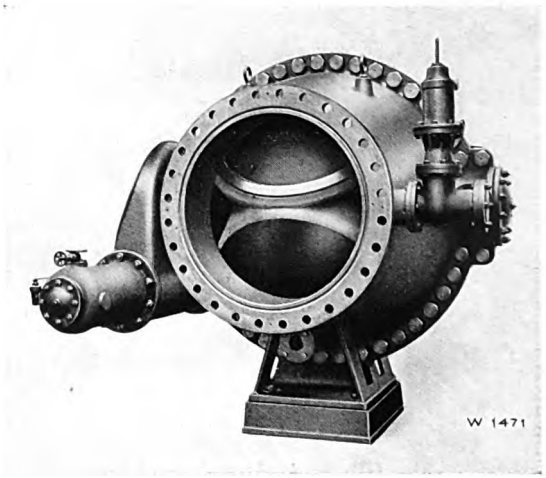

Fig. 3. The Escher Wyss rotary valve half open.

towards rendering this disturbance as small as possible by making the sealing vane slim. The main disadvantage of the butterfly valve, viz. its inability to form a water tight seal, could only be overcome by allowing of the disc in its closed position to be firmly pressed against the seat with water pressure. To secure this end it was necessary that the disc, before opening, should be lifted somewhat from its seat in order that it could be easily turned. Fig. 7 diagrammatically illustrates such a valve.

Before opening, the spindle had to be moved the distance a in the direction indicated by the arrows so that the disc could then be turned into the

Digitized by Google

position shown by the dotted lines. Quite a number of devices were elaborated to produce this combined movement, viz. to raise the disc and then to turn it when opening the valve, and vice versa to first turn the disc and then to press it against its seat when closing the valve. All these contrivances were comparatively complicated and expensive, and in spite of factory results in service as long as they were not required to handle high pressures and as long as large sizes were not required. In such cases, the disadvantage of having to also seal the servomotor 4 around its circumference in order to obtain perfect sealing was very conspicuous. This fact, and the general disadvantage of impeding the flow of the

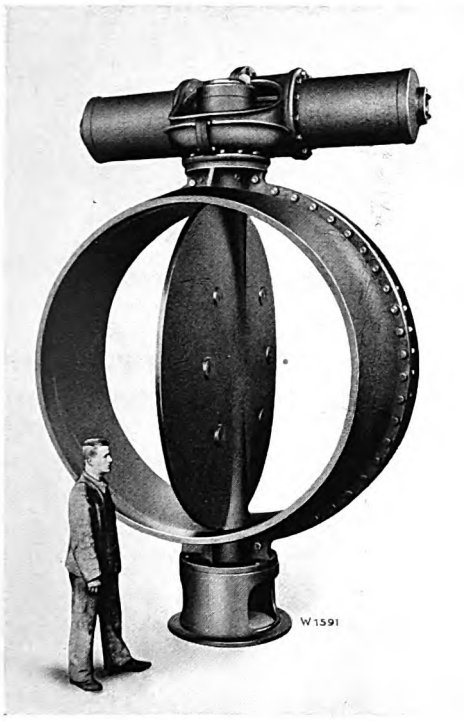

Fig. 4. Throttle valve.

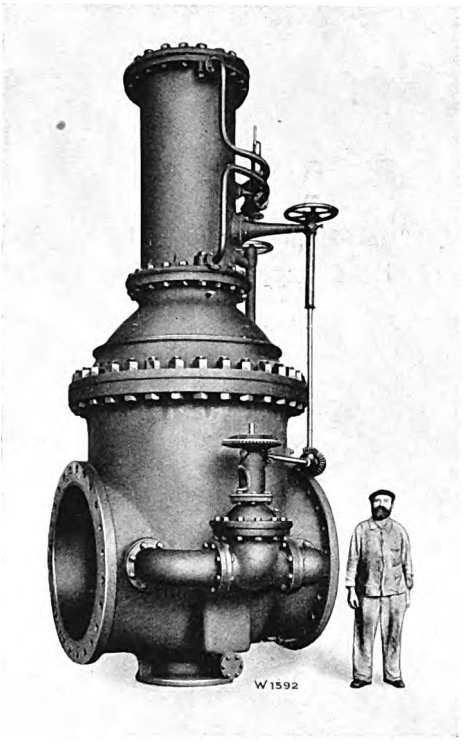

Fig. 5. Gate valve.

using largest gear ratios it was always a difficult proposition to raise the disc against the full pressure of the water should it be impossible for any reason to produce a counter-pressure.

A decided improvement was embodied in the throttle valve with moveable seat illustrated in Figs. 8 to 10. Fig. 9 shows such a «disc valve» closed. To reach the open position indicated in Fig. 10, the moveable seat is first of all moved to the left by the servomotor 4 until there is sufficient room to turn the disc 2. The movement of the disc is then effected by a duplex servomotor acting on lever 3, shown in Fig. 8. This design very ingeniously avoided the disadvantage of raising the disc against the pressure and besides, by moving the seat, the space behind the disc could be filled with water without providing a special bye-pass. Several butterfly valves of this design were manufactured and gave satisfactory results in service as long as they were not required to handle high pressures and as long as large sizes were not required. In such cases, the disadvantage of having to also seal the servomotor 4 around its circumference in order to obtain perfect sealing was very conspicuous. This fact, and the general disadvantage of impeding the flow of the water when open, finally induced Messrs. Escher Wyss & Co. to give up this design in spite of its other advantages.

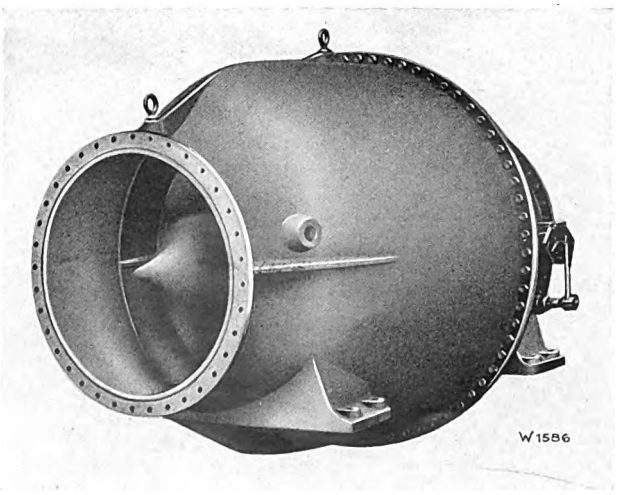

Fig. 6. Piston valve.

Digitized by Google

The further studies of the questions involved ultimately led to the design, which is found in the present rotary valve. The first of these, illustrated

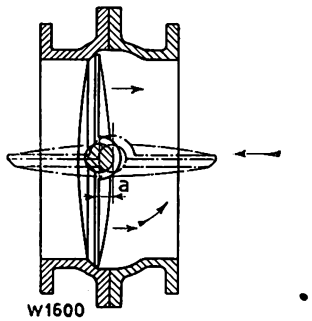

Fig. 7. Disc valve.

in Figs. 11 to 13, clearly shows this basic form. A length of pipe 1, supported by two journals, when

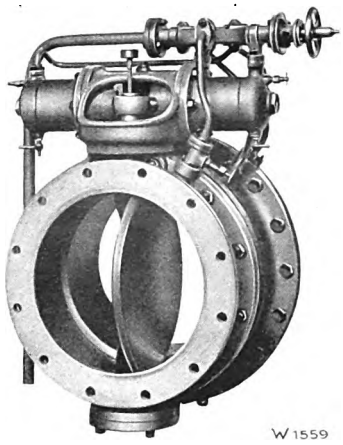

Fig. 8. Disc valve.

in the open position as shown in Fig. 12, offers no resistance to the flowing water. In order to close

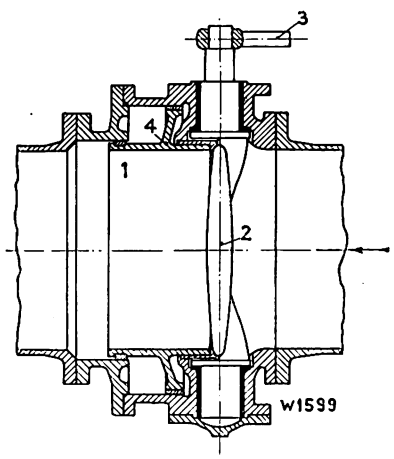

Fig. 9. Disc valve, Fig 8, in section, closed.

this valve, the piece of pipe is turned 90 degrees whereby a sealing ring fixed to it is pressed against a corresponding ring in the valve casing. To obtain

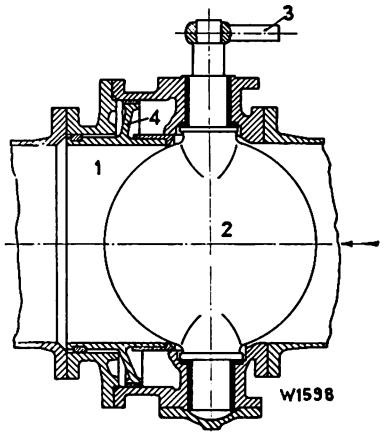

Fig. 10. Disc valve, Fig. 8, in section, open.

perfect sealing, the bearings of the rotary body 1 have a little play in the direction of the flow of

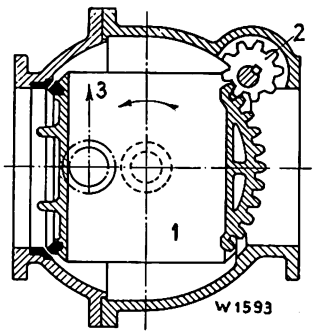

Fig. 11. Rotary valve with toothed wheel drive, closed.

the water. The rack and pinion gear provided for moving the rotary body, owing to the eccentric bore of the pinion 2, operates with varying leverage, the latter being greatest at the beginning of the opening movement when the resistance to be over-

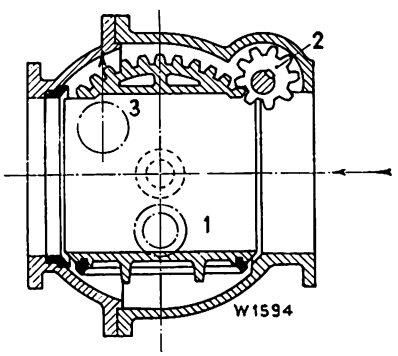

Fig. 12. Rotary valve with toothed wheel drive, open.

Digitized by Google

come is greatest. In another type of the same valve, Figs. 14 and 15, the rotary body is driven by a wire rope, likewise with variable leverage. Both designs have the common disadvantage that the driving

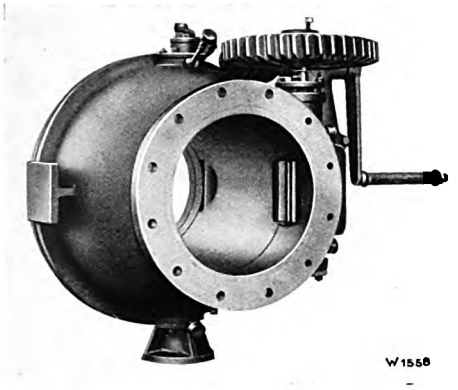

Fig 13. Rotary valve with toothed wheel drive, open.

mechanism is immersed in water and is, therefore, subject to considerable wear, especially where sandy water prevails. Also the whole construction suffered from the main disadvantage of sluice valves viz. that the sealing rings, if not sufficiently relieved, have to be moved with great pressure against each other and are, therefore, exposed to the danger of being damaged.

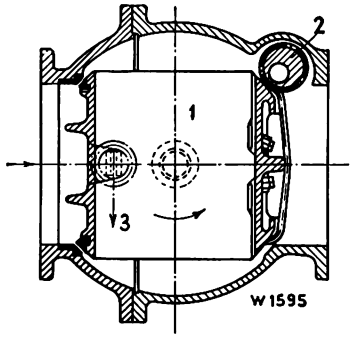

Fig. 14. Rotary valve with wire rope drive, closed.

In spite of this, another valve with an interesting drive was built on practically the same principle, see Figs. 16 to 20. The drive in question is a combination of a worm and thread spindle gear, the gear ratio of the spindle being a multiple of that of the worm.

When the valve is closed, Fig. 16, spindle 2 is first of all moved upwards by turning the driving wheel and moves the rotary body 1 along with it. This movement is performed utilizing the large trans-

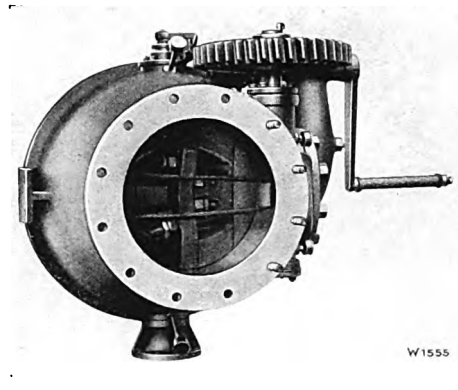

Fig. 15. Rotary valve with wire rope drive, closed.

mission ratio of the thread on the spindle and continues until the collar 3 of spindle 2 reaches the threaded bush. During this interval the valve is opened to a definite degree, pressure is built up on the reverse side and the resistance diminishes. As the spindle can now no longer move upwards, it must follow the turning movement of the driving wheel and the further opening of the valve is performed by means of the worm gear. When closing the valve, inversely the rotary body is first of all turned back by means of the worm gear and the final closing performed with the spindle. The gear action just described has the great advantage that when approaching the closed position, the large transmission ratio is automatically cut in, whilst during the remainder of the stroke the turning may be effected more quickly.

The next improvement made, placed the whole design on a completely new basis. This improvement consisted in relieving the sealing disc and has been incorporated in the present day design of the rotary valve. It ensures perfect metallic sealing and when the pressure is removed the sealing rings are completely relieved and ready for being moved. The sealing rings are thus absolutely safeguarded against damage and the resistance to be overcome when moving the valve is considerably reduced. Although this latest design has already been described by several publications, we will conclude by

Digitized by Google

giving a short description of it, referring to Figs. 21 and 22. The spherical valve casing, which is the most advantageous form for the stresses, which have to be withstood, contains the rotary body with the sealing disc, supported by two journals, which may be lubricated. This body is provided with a metallic sealing ring, which in the closed position of the valve is pressed by the pressure in the pipe-line acting on the disc, against a corresponding sealing ring in the casing. In front of the sealing disc there is a hollow space A into which only a small quantity of water can flow and which is connected with the pipeline behind the valve by means of a pipe passing through a hollow journal. A valve B is provided in this bye-pass. As soon as this bye-pass valve is opened, space A is placed in com-

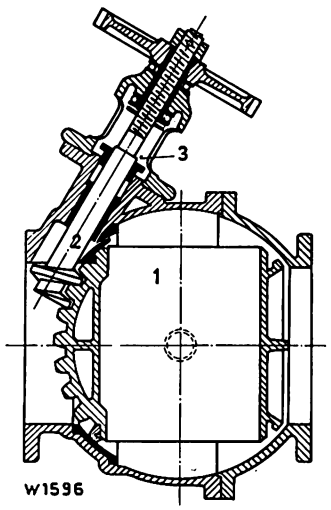

Fig. 16. Rotary valve with thread spindle drive, closed.

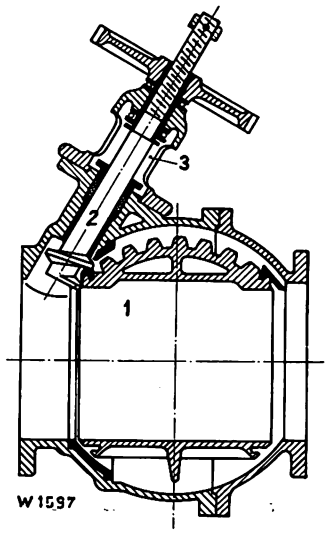

Fig. 17. Rotary valve with thread spindle drive, open.

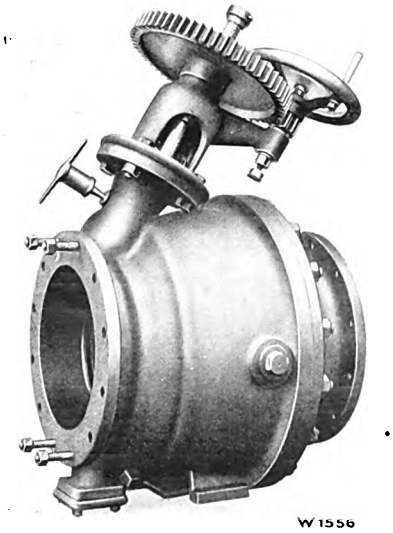

Fig. 18 Rotary valve with thread spindle drive, open.

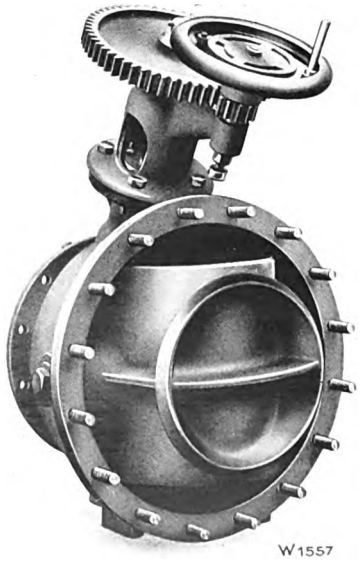

Fig. 19. Rotary valve with thread spindle drive, closed.

Fig. 20. Rotary valve with thread spindle drive, open.

Digitized by Google

munication with the space behind the valve, so that both sides of the sealing disc are under the same pressure and the disc is thereby relieved. The sealing rings are no longer pressed together and may be moved relatively to each other. The pressure acting on the rotary body is taken up by the two journals, whereby the frictional resistance is comparatively small.

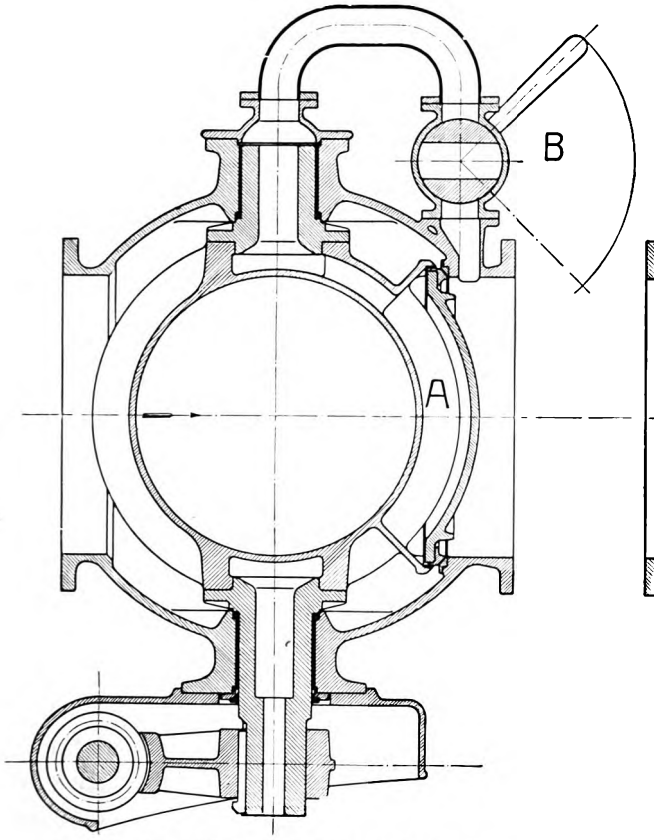

Fig. 21 Section through rotary valve, closed.

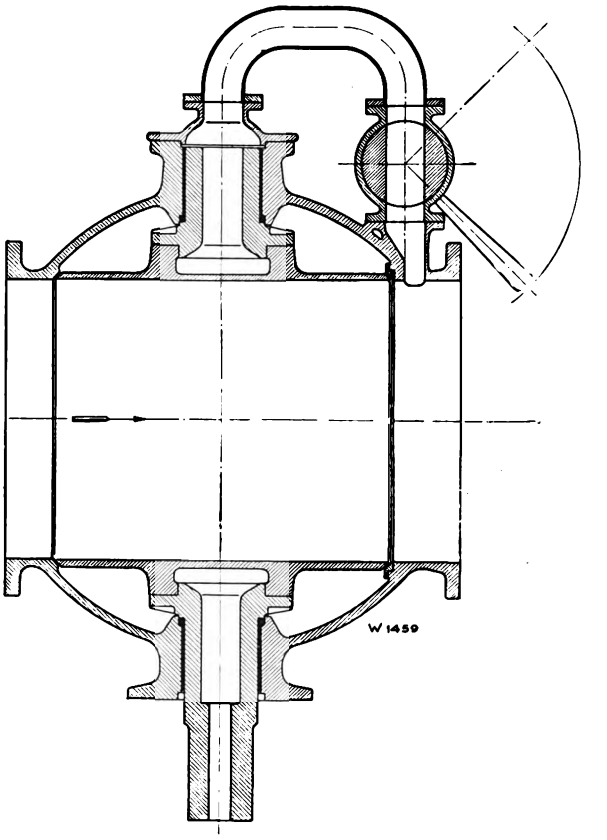

Fig. 22. Section through rotary valve, open.

Digitized by Google

The water turbine installations at Inawashiro (Japan).

By J. Moser.

The development of water power of Japan has made much progress within the last few years, and our firm has been able to successfully compete in the international competition for the supply of the necessary water turbines. Although there are works in Japan which manufacture water turbines, yet the European designers are preferred whenever the solution of special problems or the design of special details are involved. As a result of the superiority of our designs and the vast experience we have gained during many years in the construction of large water turbine plants, we have succeeded in retaining Japan as one of our most important markets.

The Tokyo Dento K. K. in Tokyo, who for over 20 years have been engaged in the generation of electricity from water power, decided three years ago to build two additional power stations as an extension to their existing power plants Inawashiro I and II. These two new installations are briefly designated as «Inawashiro 3» and «Inawashiro 4» in the following description. The available head for the two plants amounts to 134 ft. for «Inawashiro 3» and to 209 ft. for «Inawashiro 4», whilst the water quantity was fixed at 752 cub. ft. for each turbine. The output of the units under the respective heads is, therefore, 10 000 and 15 000 HP respectively at a speed of 250 r. p. m.

The lay-out and design of the two installations is the same in principle, for both contain three vertical shaft spiral turbines and the water is supplied to each turbine through a separate pipeline. Fig. 1 illustrates the design in detail. Special features of the turbines are, the protective rings of the runner wheel and guide wheel, which are designed with labyrinth sealing, the design of the guide bearing for which the customary oil-lubricated white metal bearing has been replaced by a lignum vitae bearing, and finally the hydraulic gland, consisting of five sealing rings arranged axially one behind the other, fixed above this bearing.

The guide apparatus is designed for external regulation, the regulating mechanism lying outside of the water, and the two guide blade journals may be easily lubricated from one point. To reduce the

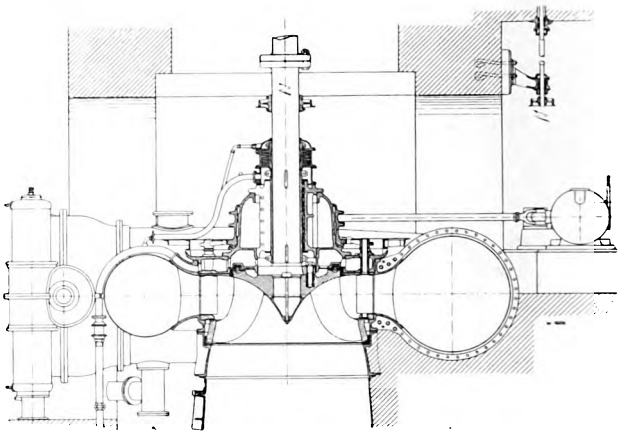

Fig. 1.

axial thrust, two suction pipes are provided arranged in the guides of the central ring of the spiral, which pipes discharge into the lower part of the draught tube. The latter is of the Prasil type and is made of sheet metal throughout anchored to a massive concrete cone, see Fig. 2. The top part of the draught tube is provided with a large opening for locating the runner wheel. Owing to the size of the spiral casing, it is built up of sheet metal sections, which are provided with butt straps and are welded together, instead of being rivetted, see Fig. 3.

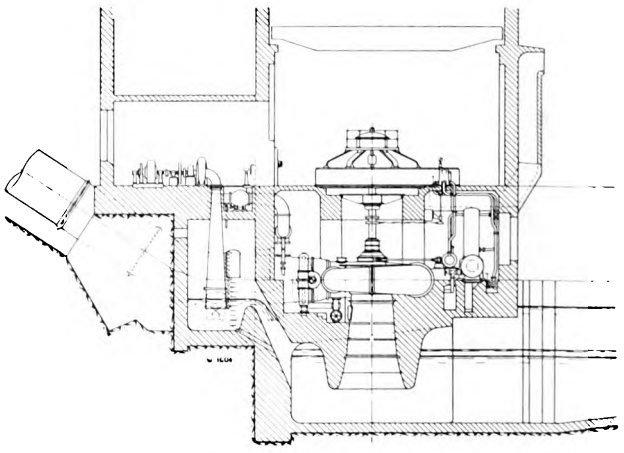

Fig. 2.

The welding has proved very satisfactory in this case, inasmuch as no additional welding to the spiral casing was necessary after the pressure tests in our shops.

Digitized by Google

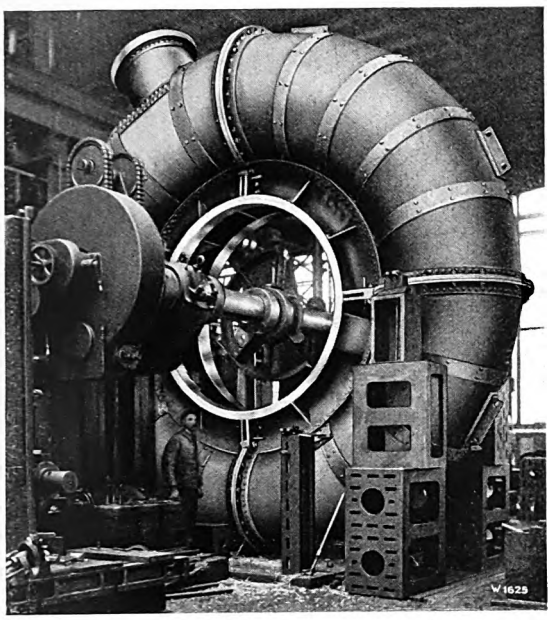

Fig. 3.

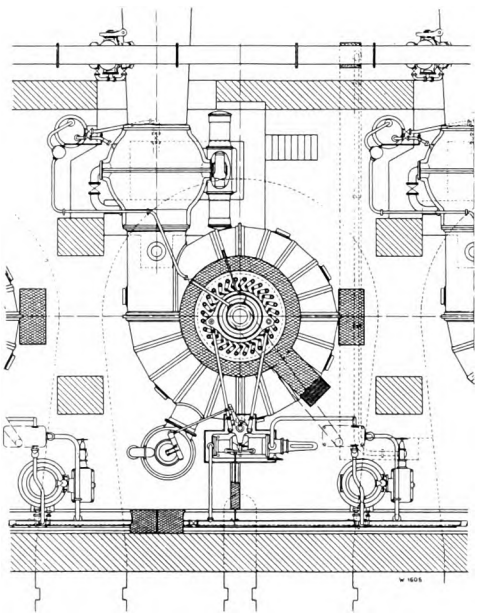

Fig. 5.

The «Inawashiro 3» installation is controlled by hydraulically operated throttle valves, 7¾ ft. internal diameter, and in the «Inawashiro 4» installation by rotary valves of 6 ft. diameter, which are also hydraulically operated. These valves are operated from the generator floor, on which the control stand for the governor is situated, whilst the servomotor is placed near the turbine and is connected with the turbine regulating ring by means of two rods, Fig. 4. The pendulum of the governor is horizontally driven by means of a belt from the turbine shaft.

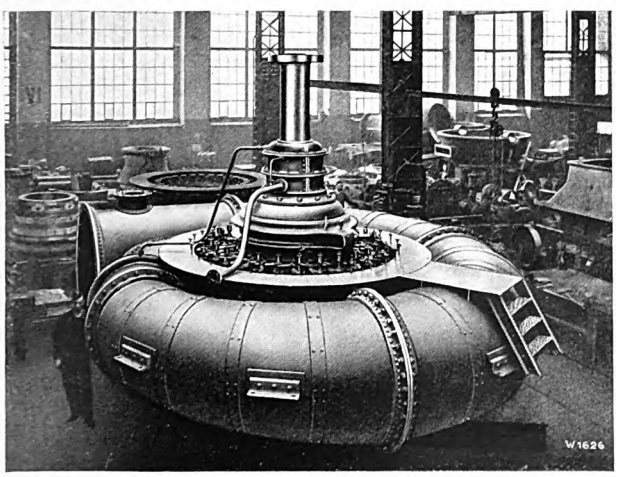

Fig. 4.

Each unit is equipped with its own plant for supplying oil under pressure driven by a small Pelton turbine. As a stand-bye, however, the air chambers and the oil reservoirs are interconnected by means of pipes so that in case of a failure of a pump, a governor may be operated by the oil pumps of the other units.

The pipeline and the regulating conditions in the «Inawashiro 4» plant necessitated the provision of pressure regulators, Fig. 5, whilst in the «Inawashiro 3» plant this was not necessary.

It must be mentioned that the generators have no separate exciters. The excitation current for each central station is produced by a separate horizontal shaft spiral turbine of 400 HP output at 720 r. p. m. To ensure that this turbine can always be operated, its intake pipeline is connected with all the main pipelines by means of branches, which may be shut off by means of valves. To simplify operations, the exciter turbine is mounted on the generator floor, and it was, therefore, necessary to provide a special overflow weir for its discharge, in order that the permissible suction head should not be exceeded, see Fig. 2.

Both installations were completed in the summer of 1927 and have since then given every statisfaction in service.

Digitized by Google

The Zoelly steam turbine and its recent development.

By Hermann Bauer.

(Continuation 1.)

II. Geared turbines and their employment as special turbines.

Of late there has been a very considerable demand for steam turbines not only for large and medium-sized plants but also for smaller plants and the reciprocating engine has been completely superceded by the modern steam turbine even where only small outputs are concerned. This is due to the undoubted advantage possessed by the turbine that it can fully utilize high vacua, whilst this is impossible with a reciprocating engine since the large volumes of steam under high vacua conditions would necessitate exceptionally large cylinders and exhaust ports. Further, the fact that the thermodynamic efficiency of a small steam turbine equals that of a steam engine and that the steam turbine requires less floor space, is easy to handle, is most reliable in service, produces an oil-free condensate and is extremely adaptable and reliable with regard to governing, all these factors have assured its employment in most industries.

Regarding the smaller turbines, efforts were specially directed on keeping the production costs within reasonable limits and avoiding any increase in price which might have resulted from increasing the number of stages or the mean diameters of the wheels. The improvement of the turbine efficiency was also a point of outstanding importance and was obtainable by raising the speed. This prompted our firm in 1918 to take up the manufacture of geared turbines, and, as at that date the question of producing reliable gears had also been definitely settled, no further difficulties were to be anticipated. The employment of turbines could, therefore, be extended to other kinds of machines, such as pumps, fans, blowers, compressors, line shafting and low-speed three-phase and direct current generators.

For these geared turbines, as for the normal condensing turbines described in Number 1 *), the fundamental object was to obtain maximum reliability in service. Therefore, it is frequently unavoidable with certain service conditions to fix the efficiency somewhat below the maximum. The following kinds of geared turbines will be described hereunder:

A. Pure condensing turbines.

B. Special turbines, such as back-pressure, bleeder, and bleeder-back-pressure turbines.

C. High pressure turbines.

A. Pure condensing geared turbines.

These turbines, shown in section in Fig. 1, are built for capacities of up to 5000 kW, subdivided as follows: up to 400 kW at 9000 r. p. m., up to 1500 kW at 7500 r. p. m., and up to 3000 kW at 6000 r. p. m. Geared turbines for greater outputs than 3000 kW at 4500 r. p. m. are chiefly used for replacing the old turbines of 1500 r. p. m. turbo-sets, or for driving direct current generators.

The robust and massive design of these geared turbines will at once be observed from the accompanying illustrations. They are of the multi-stage impulse design with few stages, which, apart from the simple structure, permits a short distance being employed between bearings thus ensuring absolute steady and vibrationless running. Each element of the turbine is designed with a view to obtaining greatest reliability in service.

The shaft and wheels of all geared turbines are turned from one solid forging, and the diameters of the runner wheels, designed as bodies of uniform strength, are small so that in spite of the apparently high speeds, the rotating elements are no more stressed than in turbines of only 3000 r. p. m. The

*) See: Escher Wyss News, Vol. 1, Number 1, Bauer, "The Zoelly steam turbine and its recent development".

Digitized by Google

speed of the geared turbines cannot, therefore, be considered as a source of danger, which might be suggested by excessive peripheral velocities or stresses.

the speed governor, the oil distributing valve, the oil pump drive and the emergency safety devices are built into this bearing. We would specially emphasize the fact that two emergency safety devices are

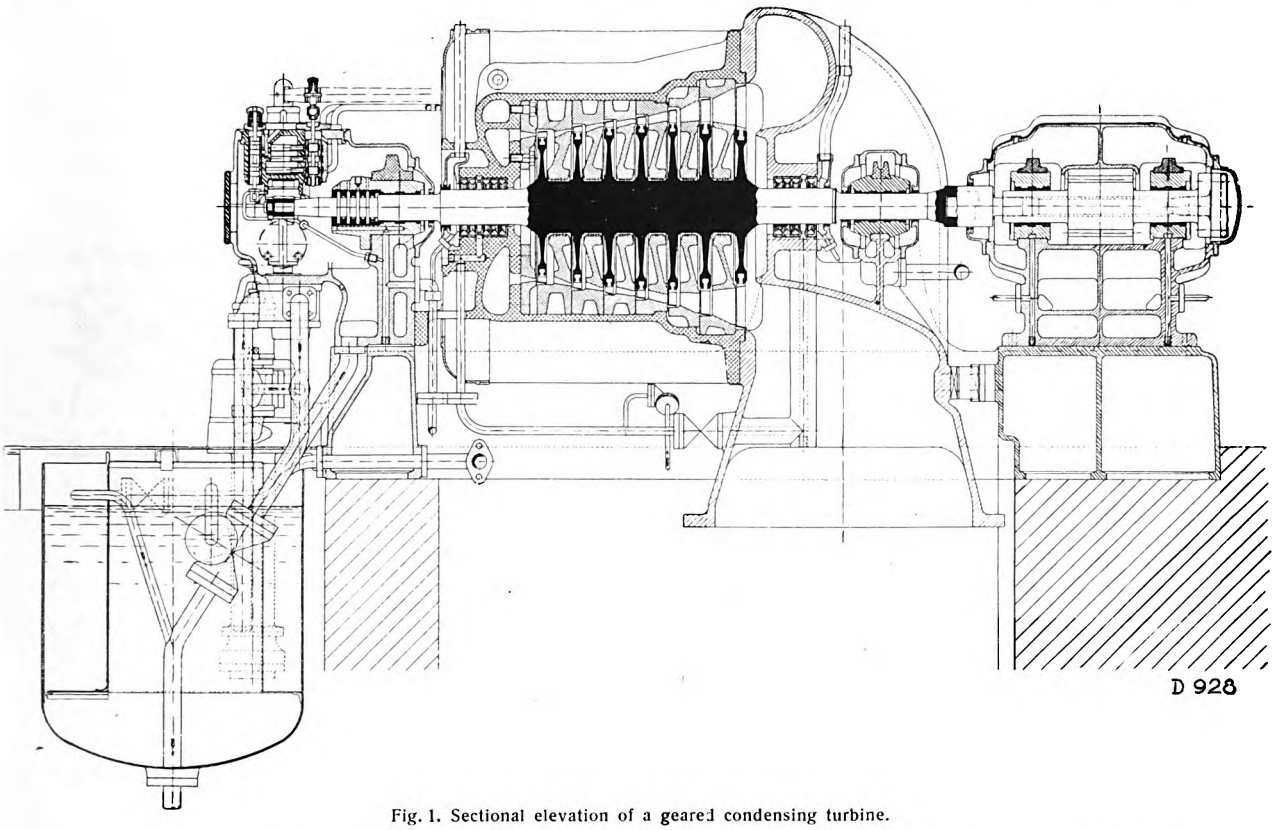

Fig. 1. Sectional elevation of a geared condensing turbine.

The runner wheel blades are made of nickel steel containing 5 per cent of nickel, frequently nickel-plated by our own patented process, or of stainless steel. They are partly milled from the solid material and are inserted in the dovetailed grooves of the runner wheels. The guide blades on the other hand are cast in the guide wheels and the channels formed are most carefully finished by means of special machines and files in order to reduce the steam friction in them to a minimum.

Thanks to the impulse principle, large clearances are permissible between the stationary and rotating parts without affecting the steam consumption. In the axial direction the clearance of these turbines amounts to at least 0.08″ to 0.12″ and in the radial direction to at least 0.2″.

The governing is effected by means of a simple throttling mechanism controlled by oil under pressure.

Fig. 2 is a diagrammatic section through the high-pressure bearing of a geared turbine, showing how

provided, one of which acts on the throttle valve E by means of oil pressure and the emergency valve K_1, whilst the other acts on the main stop valve Q by means of the emergency valve K_2.

For the gears, spur or helical wheels are employed, which are hardened and ground by a special process. These gears run absolutely noiselessly, and units supplied by our firm, which have been opened after several years of continuous day and night service, have shown absolutely no wear on the teeth as the grinding marks were still plainly visible.

Fig. 3 illustrates the external appearance of a 1200 kW geared turbine running at 7500/3000 r. p. m. from which will be evident the compact and robust design. The steam consumption of such a turbine with an inlet steam pressure of 200 lbs/sq. in. and 662° Fahr. steam temperature, cooling water temperature 60° Fahr. at rated output of 1200 kW is 11 lbs. per horsepower-hour corresponding to a thermodynamic efficiency of 79.5 per cent, a remarkably good figure for turbines of this capacity. One of the many uses to which geared turbines can be

Digitized by Google

put is illustrated by Fig. 4. This turbine rated at 1800 HP drives the line shafting of a spinning mill in India via a gear by means of ropes, and has been in service for 5 years without giving any trouble.

and is also advisable for older plants, which are still operating in the former manner.

It is a well-known fact that the reciprocating engine even for small steam volumes has a fairly

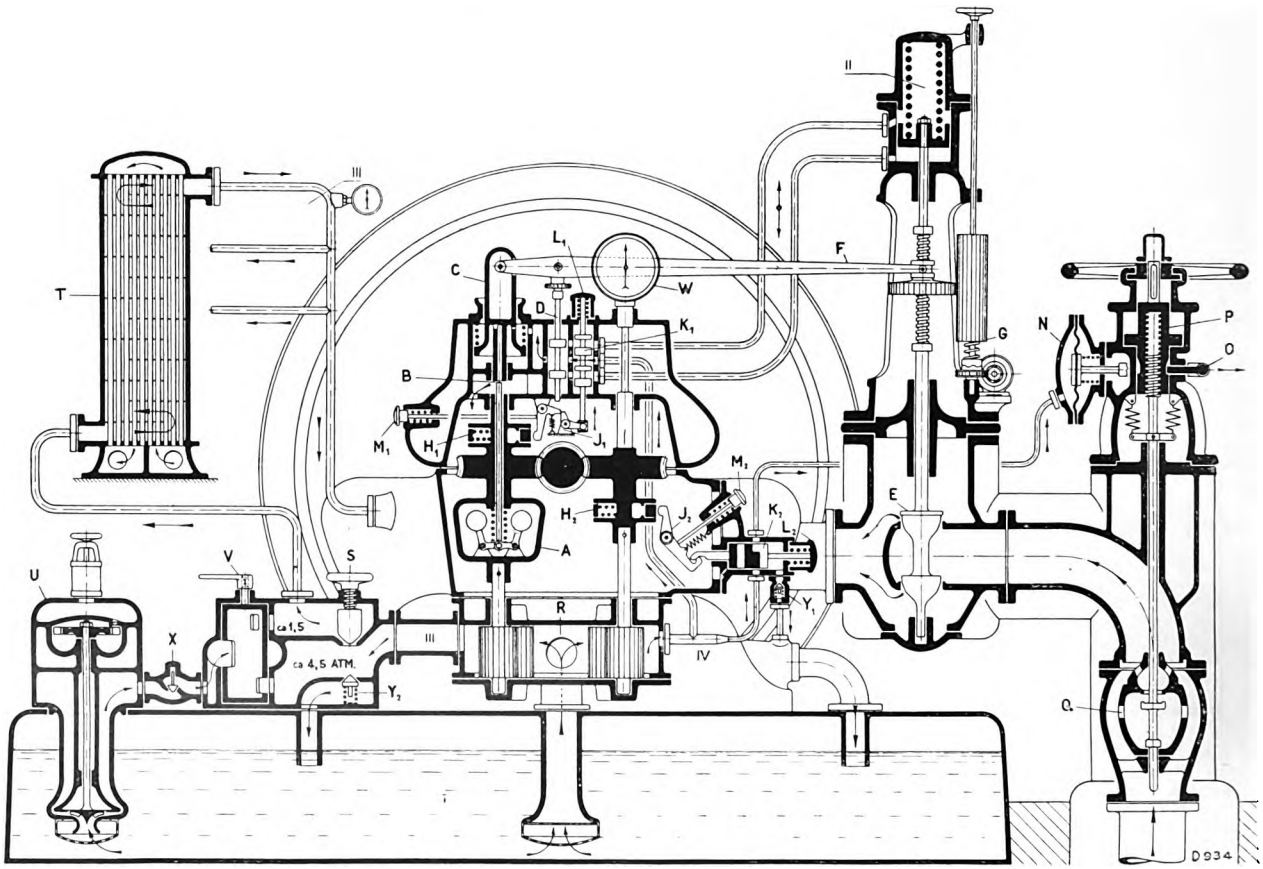

Fig 2. Diagrammatic section through the high-pressure bearing of a geared turbine.

A	Governor	L_1 L_2	Trip resetting buttons	U	Turbo-oil pump
B	Oil throttling port.	M_1 M_2	Push button trips	V	Starting valve
C	Differential piston	N	Diaphragm	W	Tachometer
D	Control valve	O	Pawl	X	Non return valve
E	Steam throttle valve	P	Sleeve with thread	Y_1 Y_2	Relief valves
F	Regulating lever	Q	Starting valve	I	Oil reservoir
G	Speed adjustment	R	Toothed wheel oil pumps	II	Servomotor
H_1 H_2	Safety governors	S	Oil throttling valve	III	Bearing oil
J_1 J_2	Pawls	T	Oil cooler	IV	Governing oil
K_1 K_2	Emergency valves				

B. Special turbines.

In many industrial works, for instance in chemical works, dye works, bleaching establishments and especially in cellulose and paper mills, it is essential that the steam can be used both for power generation and heating purposes.

Although there are still works, which produce the process steam in low-pressure boilers and employ high-pressure boilers with separate power units or purchase the electric energy from some external source, yet the general trend is to expand the steam in an engine before using it for process work or heating purposes. This combination of power and heat utilization results in a considerable economy

high efficiency. It has only been possible within recent gears for the steam turbine to gain a better footing in works requiring process steam, after the portion of the turbine dealing with the process steam had been rendered more efficient.

A given amount of steam under given service conditions can only produce a certain amount of power, and when the power obtainable from the required quantity of process steam coincides with the power demands of the works, or in other words, when the power generated can be completely utilized, then a back-pressure turbine should be adopted. Back-pressure turbines are superior to reciprocating engines not only on account of their

Digitized by Google

simplicity and space economy but also on account of the fact that the exhaust steam is prefectly free of oil.

If, on the other hand, there is no coincidence between the required quantity of process steam and the power demands, then a bleeder turbine can only be considered. This type of turbine is most generally used with installations requiring power and process steam simultaneously, and has found special favour in the paper and cellulose industries. The steam required for heating and cooking purposes is utilized in the high-pressure part of the turbine up to the bleeding pressure, in the same manner as is done in a back-pressure turbine, except that the same

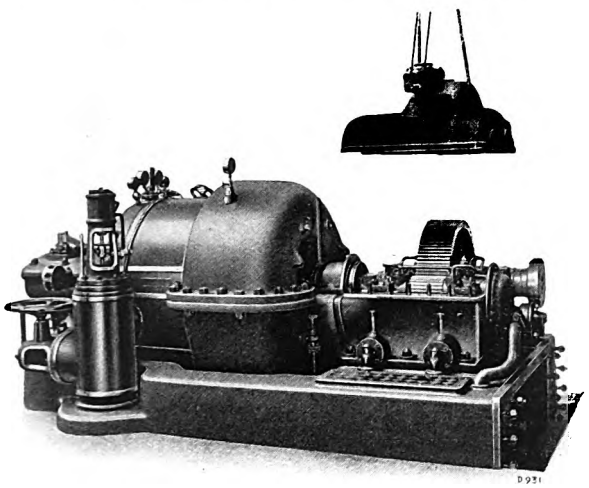

Fig. 3. Geared turbine, output 1200 kW at 7500/3000 r. p. m.

casing also contains a low-pressure turbine, which generates the balance of the power required. This low-pressure part may be so dimensioned that when the turbine is not bled, it can produce the full output. However in many cases a smaller output suffices when no steam is being bled.

At the same time it is quite feasible to separate these two portions of the turbine plant, the process steam being utilized in a back-pressure turbine whilst a separate normal condensing turbine takes care of the fluctuations in load.

If a works has to operate with several process steam pressures, it is possible to provide a corresponding number of extraction branches on the turbine. However, as in most cases the amount of steam bled, or the pressures, are specified to be automatically controlled, the regulation of such a turbine with several stages of extraction would become exceedingly complicated and would jeopardise the otherwise simple design of the turbine. For this reason the maximum number of extraction branches for such special turbines are nowadays generally limited to two.

Geared turbines are excellently suited for the special cases outlined above, and Messrs. Escher Wyss & Co. may boast of being the first firm to have taken up the manufacture of such turbines, and also turbines for pressures up to 2560 lbs/sq. in. and steam temperatures up to 842° Fahr.

The following description deals with a number of special turbines for high pressures which have been supplied by Messrs. Escher Wyss & Co.

Fig. 5 illustrates a geared back-pressure turbine supplied to the Simmering power station for the Vienna Municipal Electricity Works. The turbine is designed for an initial steam pressure of 455 lbs/sq. in. and a steam temperature of 750° Fahr. Its rated output is 800 HP, but it can sustain a continuous overload of 25 per cent by means of a hand-operated valve situated at the side. The back-pressure in the exhaust branch equals 36 lbs/sq. in. abs. and the exhaust steam is entirely utilized for feed heating purposes. The turbine speed is 6000 r. p. m., whilst that of the generator is 3000 r. p. m.

Fig. 6 shows the exceedingly robust design of the turbine rotor (shaft and wheels from one solid forging), and the simple arrangement of the gear. The heat drop is utilized in 7 Zoelly stages, and the steam consumption is exceedingly economical, whilst the governing mechanism is very simple.

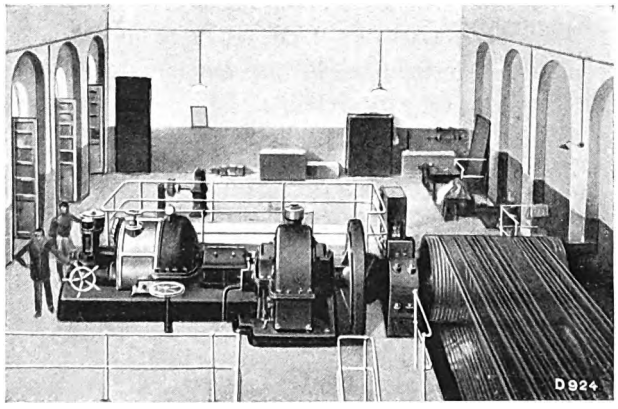

Fig. 4. Geared turbine for a spinning mill in India.
Output 1800 HP at 3600/300 r. p. m.

With back-pressure turbines it is also frequently necessary to operate with several extraction steam pressures, so that the turbines have to be equipped with several bleeder branches.

Such turbines are usually known as bleeder-back-pressure turbines.

Digitized by Google

An interesting turbine of this type is shown in Fig. 7. The machine was supplied to the Berndorf Metal Works A. Krupp (Austria) almost two years ago and has a rated output of 1950 HP at 500 lbs/sq. in. initial steam pressure, 750° Fahr. steam temperature and 6500 r. p. m., which is geared down to 3000 r. p. m. At the pressure of 200 lbs/sq. in. abs. 6600 lbs. of steam are bled to drive a condensing turbine formerly supplied by the A E G. whilst the remainder of the steam leaves the turbine at a pressure of 70 lbs/sq. in. abs. and is utilized for heating and process purposes. Under these conditions the steam consumption of the unit equals 35 200 lbs. per hour. Very exacting stipulations were

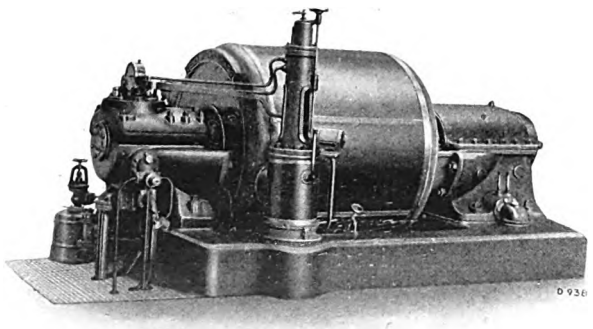

Fig.5. Geared back-pressure turbine for the Simmering power station (Austria). Output 800 HP, at 750° Fahr., 455 lbs/sq. in., 6000/3000 r. p. m.

made regarding the regulation of the turbine, inasmuch as both the bleeding pressure and the back-pressure had to be kept constant independently of the steam quantities bled. In spite of this, the regulating mechanism is extremely simple and has proved perfectly reliable. The pressure regulators for controlling the bleeding pressure and back-pressure are accentuated by oil pressure and are contained in the two large boxes fixed on the bedplate. The third smaller box contains a device, which switches the speed governor in or out. The

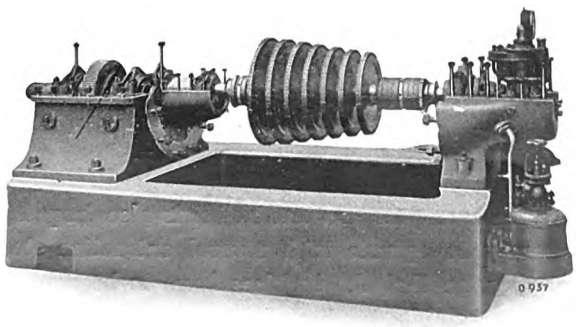

Fig. 6. Rotor of the geared back-pressure turbine for the Simmering power station (Vienna).

internal design of this turbine is illustrated by Fig. 8, from which it will be seen the total heat drop is utilized in only 6 stages. The rotor, made solid with the shaft, and the guide wheels are very massive, whilst the clearances between the stationary and moving parts are of the order of 0.12″ to 0.2″.

The entire design of this special turbine is conspicuous by its simplicity and robustness.

As the performance of the regulating mechanism will doubtlessly interest many works engineers, we are publishing a description of it hereunder, see Fig. 9.

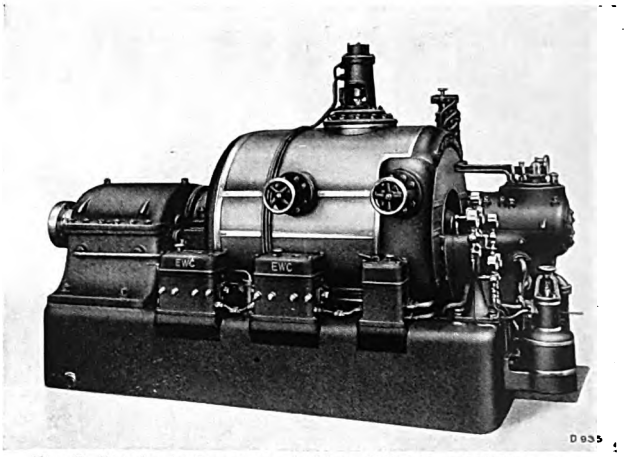

Fig. 7. Bleeder back-pressure turbine, 2000 HP, 6500/3000 r. p. m., 500 lbs/sq. in., 750° Fahr., for the Berndorf Metal Works A. Krupp, Berndorf (Austria).

Bleeding pressure regulation.

When the pressure in the bleeding branch rises, the regulating mechanism closes the throttle valve N until normal conditions have been restored. The pressure in the bleeding branch is transmitted through the pipeline 1 to the Arca relay A R. This latter reduces the pressure in the space v_1 when the steam pressure rises, and the piston a accor-

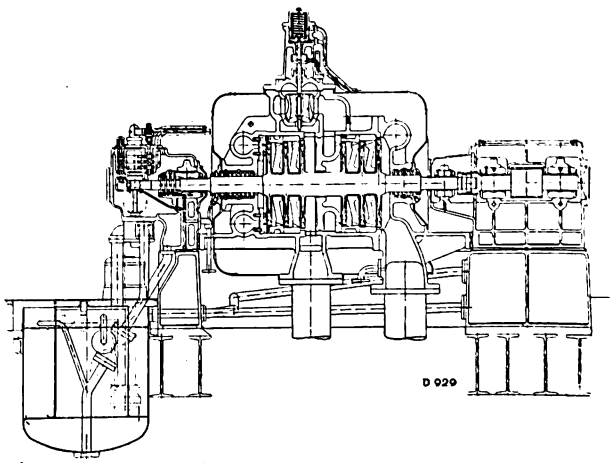

Fig. 8. Sectional elevation of the Berndorf bleeder back-pressure turbine.

Digitized by Google

dingly moves to the left. The discharge of oil through nozzle b_1 is impeded, whilst the oil can flow more easily through nozzle b_2. A drop of pressure ensues from space y_1 to space y_2. The spaces y_1 and y_2 are connected with the oil motor G. The drop of pressure tries to even itself out through this oil motor and rotates it. This movement is transmitted to wheel J_2 over the toothed wheels H_1, H_2 and J_1. Wheel J_2 is constructed as a nut and for the case under consideration travels upwards along the spindle of the throttling valve. The position of the speed governor A remains unaltered and point Z is, therefore, a fixed point. The pilot valve B is raised through the upward motion of the wheel J_2, and admits oil under pressure over the servomotor piston F. As soon as the latter is moved downwards by the pressure and closes the throttle valve N, the pilot valve B is also brought back into its central position by means of the regulating lever L. The oil motor G continues to influence the throttle valve N until the pressure in the bleeding branch is restored to normal. The position of the speed governor A is accentuated only by the periodicity of the supply current.

Back-pressure regulation.

When the pressure in the exhaust branch rises, valve R is closed under the influence of the back-pressure regulating mechanism until normal conditions are restored.

The back-pressure regulation is performed in a similar manner to the bleeder regulation, except that the oil motor is replaced by an ordinary servomotor S.

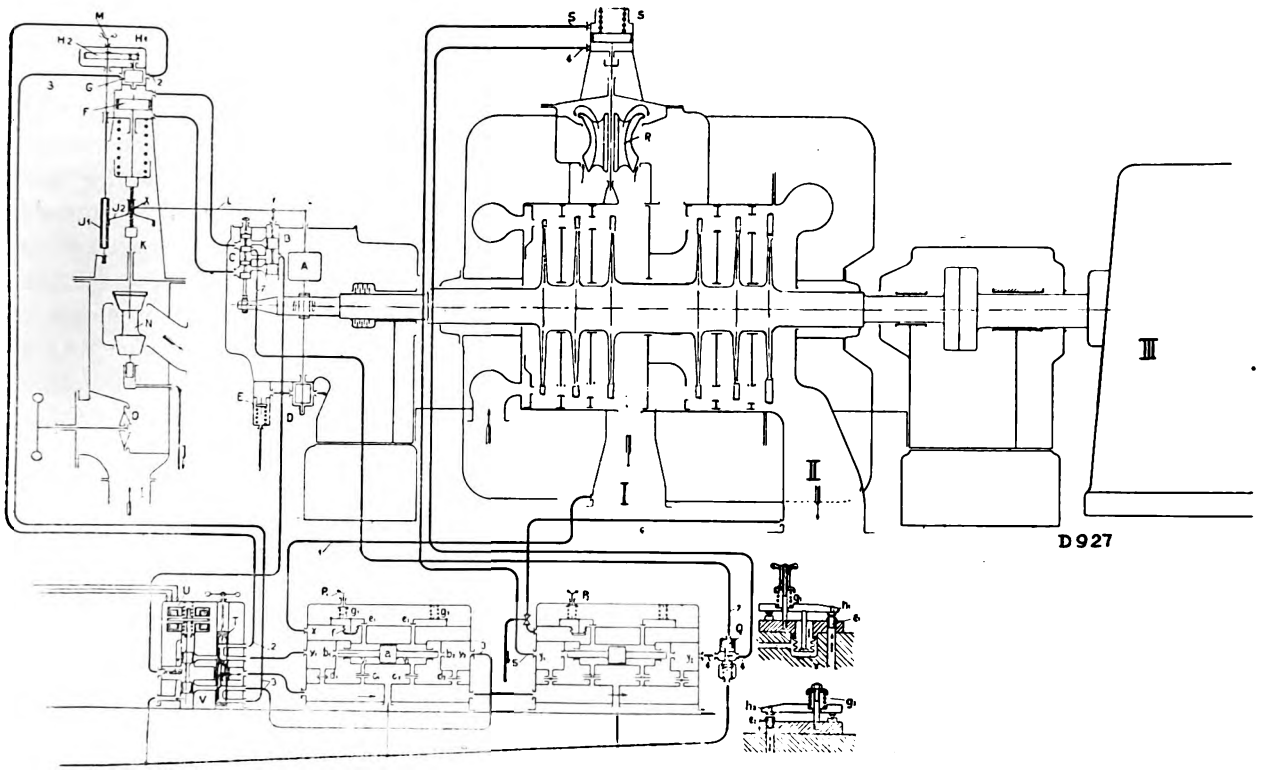

Fig. 9. Diagrammatic sketch of the bleeding pressure and back-pressure regulation of a Zoelly steam turbine.

Pressure regulator.

The pressure regulator consists mainly of the piston a controlling the discharge from the nozzles b_1 and b_2. The position of the piston is determined by the pressures in the spaces v_1 and v_2. The pressure in space v_1 is influenced by the Arca relay A R in such a manner that it diminishes with increasing pressure in the bleeder or exhaust branch. The spaces y_1, y_2, v_1 and v_2 are fed by a common pressure oil piping. Restriction passages c_1, c_2, d_1 and d_2 are provided in the connection pipes shown.

The back-pressure valve G D V serves the purpose of keeping the pressure in space v_2 constant. The valve disc h_2 is pressed on the nozzle e_2 by

Digitized by Google

means of the spring g_2 and a lever. The oil entering restriction e_2 raises the valve disc. The greater the clearance between the nozzle and the disc, the more the pressure is reduced in space v_2. This opening movement ceases when the pressure of the oil and that of the spring balance each other.

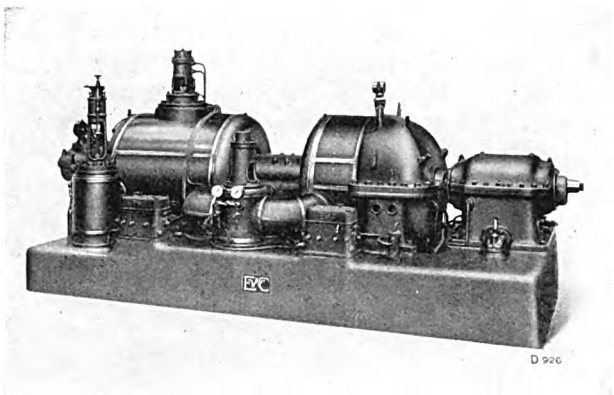

Fig. 10. Geared bleeder back-pressure turbine for the Arnau paper mill (Czechoslovakia).

The Arca relay consists of the same parts as the back-pressure valve. However, in addition to the spring g_1, a corrugated diaphragm f also acts on the lever. This diaphragm is influenced by the pressure in the bleeder or exhaust branch and partially compensates the action of the spring g_1. The desired pressure may be adjusted by means of the small handwheels p_1 or p_2.

Paralleling.

A speed adjusting device is provided for paralleling, which may be operated by hand, or electrically by remote control from the switch-board, Fig. 12. To avoid the bleeding regulating mechanism interfering when paralleling, it is cut out by the valve T. The point X on the regulating lever is moved by the handwheel M, and the speed altered thereby. The oil motor G, controlling the speed of the turbine, is operated from the switchboard by means of the electro-magnet U. This latter consists of an upper and a lower magnet, and the valve T is either raised or lowered according to whether the upper or lower magnet is energised. If, for instance, the upper magnet is energised, then the oil under pressure can flow through pipe 2 to the oil motor G, whilst pipe 3 is connected with the discharge.

When the turbine is paralleled on the external electricity network the speed governor is cut out. The speed is then kept constant by the alternator, and afterwards the further requirement that the pressure at the point of bleeding and the back-pressure of the turbine be kept constant has to be satisfied.

Precisely the same regulating principle is adopted for the simple bleeder condensing turbine, except that in this case the Arca relay has to control only one steam pressure.

In this connection we would mention that when a certain speed is exceeded, the emergency gear not only cuts off the steam supply to the turbine but also closes the bleeding and overflow valve by means of the oil pressure control to obviate a reverse flow of steam from the bleeder piping to the turbine.

A bleeder turbine of special interest is the geared turbine supplied by us a year ago to the Arnau paper mill (Czechoslovakia). This turbine is equipped with two automatically controlled bleeding valves.

Normally the turbine works as bleeder back-pressure turbine, whilst the additional low-pressure part only occasionally operates with the surface condenser, i. e. when the quantity of process steam does not coincide with the quantity of steam required for the electric energy. The turbine was designed for a service pressure of 710 lbs/sq. in. at 750° Fahr. The normal quantity of steam available is 28 600 lbs. per hour, of which 5500 lbs. per hour is bled at 128 lbs/sq. in. abs. and 16 500 lbs. per hour

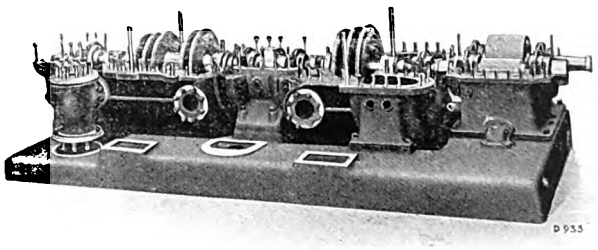

Fig. 11. Geared bleeder back-pressure turbine of the Arnau paper mill with top half of casing removed.

at 43 lbs/sq. in. abs. The rated output of the turbine is 2520 HP and its speed 7500 r. p. m., which is geared down to 3000 r. p. m. However, the turbine is designed for a maximum steam quantity of 34 100 lbs. per hour, its maximum capacity then being 3000 HP.

A further condition imposed was that at certain times steam from waste heat boilers could be supplied to the turbine through the first bleeding branch.

Figs. 10 and 11 illustrate the simple, compact design of the turbine and the few stages required are at once noticeable. The cast-steel high-pressure casing is provided with only one bleeding branch, whilst the second bleeding branch is taken from the connection pipe to the low-pressure turbine.

Digitized by Google

Despite the small number of stages, the turbine was designed with two casings. The reason for this was that the provision of two bleeding chambers within one casing would have necessitated a long distance between the bearings. This design offers the advantage that the diameters of the shaft and the leakage losses could be reduced to a minimum. The glands are designed as pure labyrinth glands.

The regulation of this dual controlled bleeder turbine in principle is the same as that of the Berndorf turbine and will be understood without difficulty by referring to Fig. 12.

the state of steam without forming a mixture of water and steam.

Although we were fully acquainted with the fact that a reduction of the pressure would involve throttling losses, yet it was decided to construct the turbine for an operating pressure of «only» 1420 lbs/sq. in. and a superheated steam temperature of 750° Fahr., in order to gain experience as to the behaviour of the materials and of the steam under these conditions.

This turbine is depicted in section in Fig. 13. The steam consumption equals 10 tons per hour, the

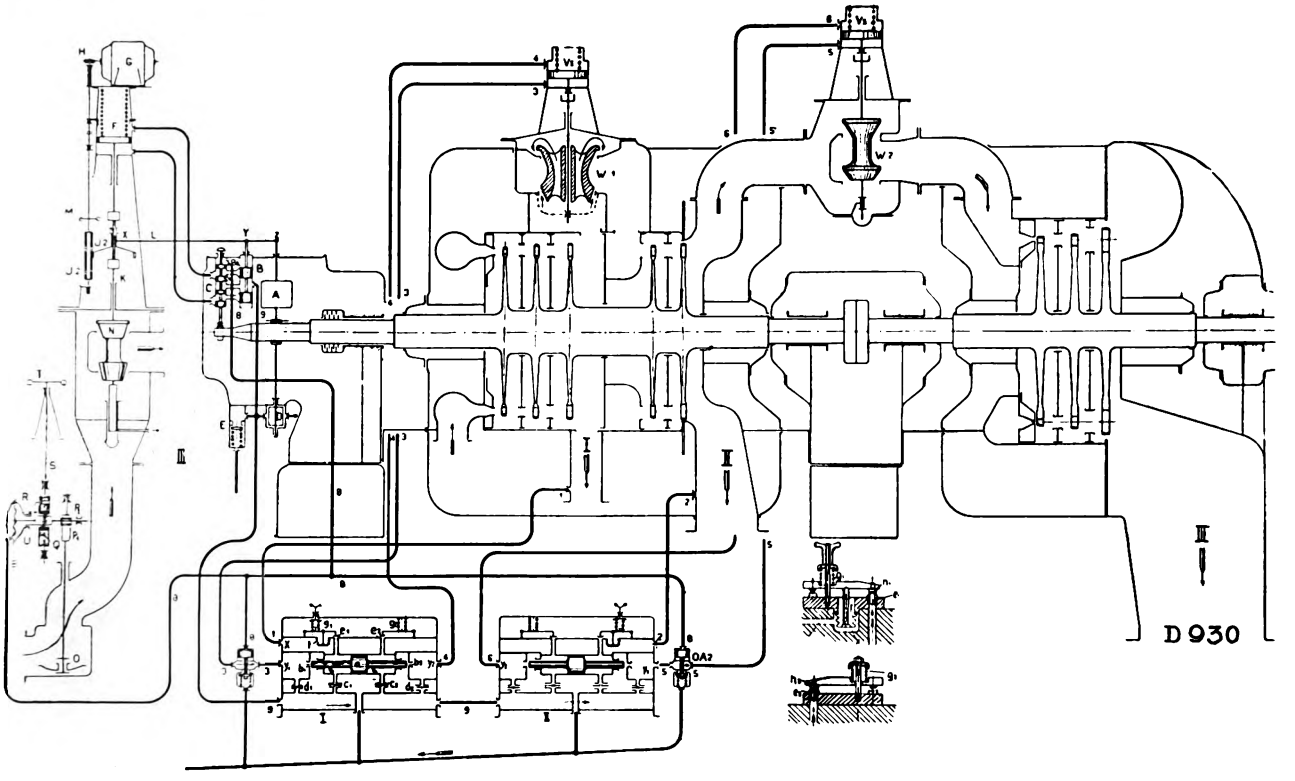

Fig. 12. Diagrammatic sketch of the bleeding and back-pressure regulation of the Arnau geared turbine.

The steam consumption of this turbine is very favourable; and details will be published in a later number.

C. High pressure turbines.

A further increase in operating pressures for steam turbines was the result of the employment of new types of boilers. About three years ago Messrs. Escher Wyss & Co. supplied a high pressure experimental turbine for the Benson boiler erected in the Siemens Schuckert Works in Berlin.

The principle of this boiler consists in that the feed water is raised to the so-called critical temperature of 707° Fahr. and to the steam pressure of 3184 lbs/sq. in., whereby the heat of evaporation equals zero and the water, therefore, passes into

pressure in the exhaust branch being 213 lbs/sq. in. abs. The output of the turbine is 1000 kW at 10 000 r. p. m., which speed is reduced to 3000 r. p. m. by means of reduction gears.

In view of the high pressure, some of the turbine elements had to be specially designed. The turbine casing is a one-piece forging of small dimensions. The guiding of the steam in the very massive guide wheels is remarkable and corresponds to a rotating hyperboloid, ensuring the maximum utilization of the steam.

The turbine rotor with few stages is forged in one single piece. The guide wheels are pushed over the rotor and then inserted together in the cast-steel casing.

Digitized by Google

The excellent results obtained with this experimental turbine after overcoming some initial difficulties proved that the utilization of highest pressures and temperatures for industrial purposes is quite feasible. Just one year later the cable works of Messrs. Siemens Schuckert ordered another high-pressure turbine from Messrs. Escher Wyss & Co. This turbine is shown in Fig. 14.

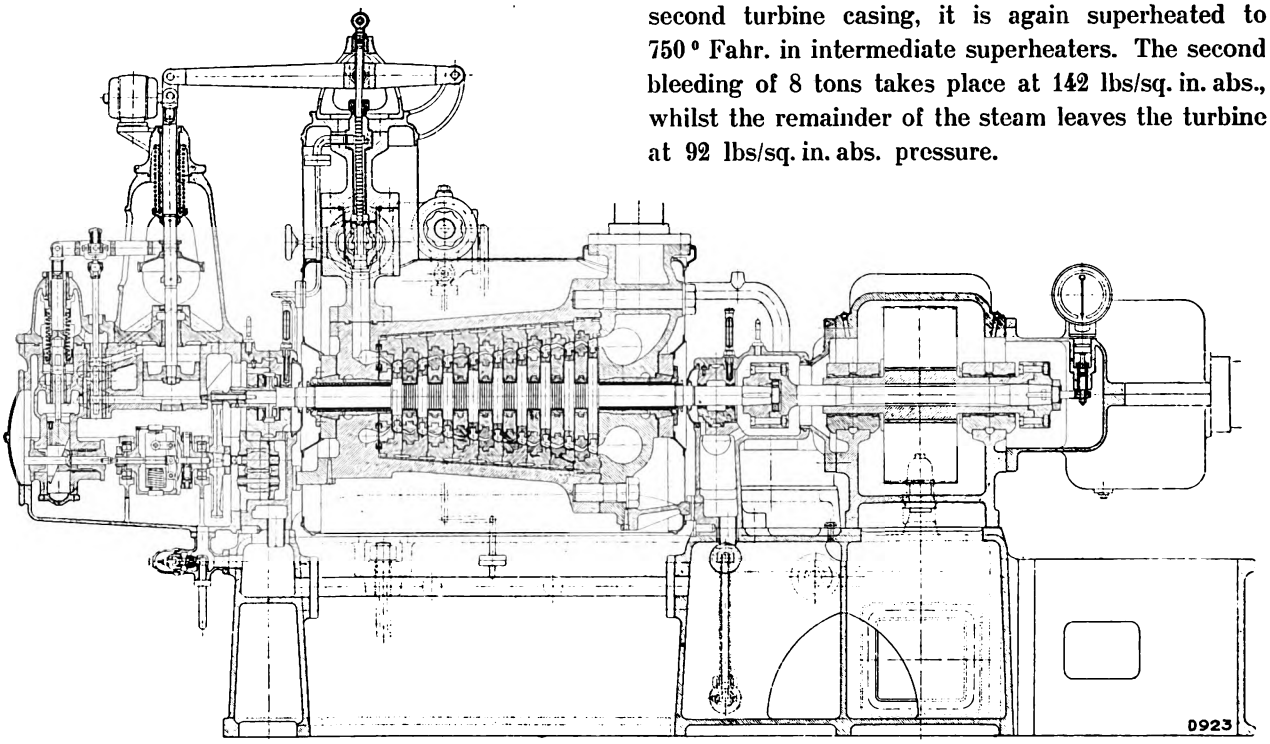

Fig. 13. Steam turbine for 1420 lbs/sq. in. pressure, 1000 kW output, 10.000/3000 r. p. m.

To avoid throttling losses as far as possible, the turbine is designed for an admission pressure of 2550 lbs/sq. in. and a temperature of 800° Fahr.; its speed is 6000 r. p. m. and normal output 3700 HP when supplied with 25 tons of steam per hour.

The individual elements correspond to those of the 1420 lbs/sq. in. turbine, but, this later turbine is subdivided into two casings in view of the two steam tappings which are required. The first bleeding of approx. 4 tons takes place at 483 lbs/sq. in. abs., which is also the point where the two casings are connected. Before the steam enters the second turbine casing, it is again superheated to 750° Fahr. in intermediate superheaters. The second bleeding of 8 tons takes place at 142 lbs/sq. in. abs., whilst the remainder of the steam leaves the turbine at 92 lbs/sq. in. abs. pressure.

This turbine was put into service at the end of 1927 and has since proved that the design chosen for the operating conditions was correct.

Messrs. Escher Wyss & Co. have up till now supplied more than 200 geared turbines, and can claim to be the first turbine manufacturers to have introduced high-pressure turbines of 1420 to 2555 lbs/sq. in. pressure into practical service.

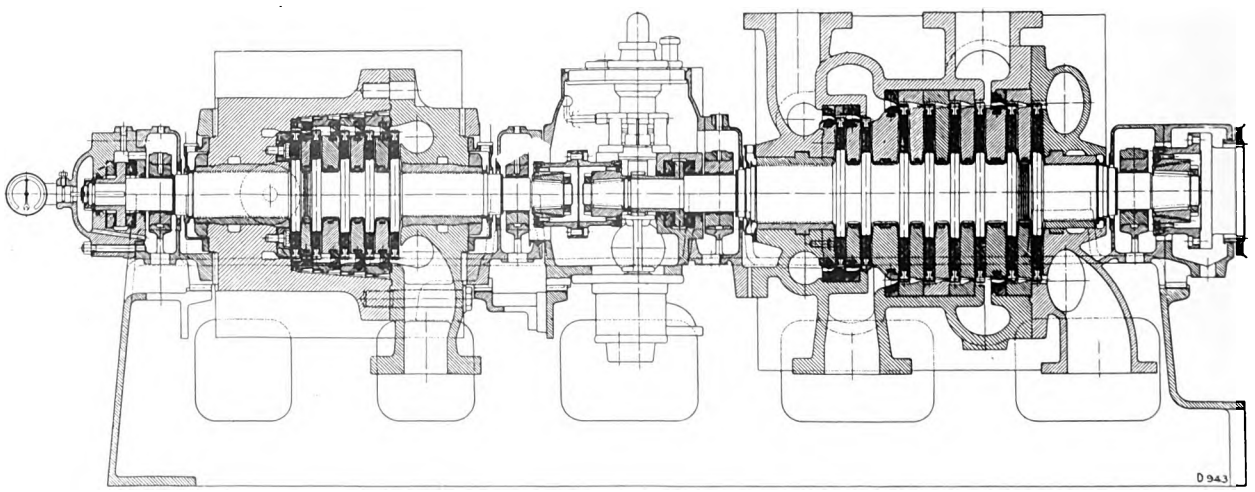

Fig. 14. Sectional elevation of a Zoelly high pressure steam turbine for 2550 lbs/sq. in. admission pressure and 800° Fahr. steam temperature.

Digitized by Google

The Zoelly steam turbo-locomotive.

By H. Nyffenegger.

(Continuation No. 1.)

IV. Comparison between air-cooled and water-coled surface condensers.

The heat liberated when condensing steam in a condenser must always (finally) be transferred to the atmosphere, and two methods, differing in principle, are available for effecting this; firstly the direct transfer of heat to a current of cooling air passing over the surface of the condenser (Ljungström locomotive), or secondly, the indirect transfer of heat from the steam condensing surface to cooling water, which in turn is re-cooled by a current of air in a separate cooler (Zoelly locomotive). The former solution at first sight appears to be the simpler and the better, but a closer investigation soon proves that it has very serious disadvantages as compared with the second solution.

The air passing through the air-cooled condenser becomes heated and the following relation is found to exist between the quantity of heat liberated in the condenser by the steam per horsepower-hour and the same quantity of heat transferred by the walls and absorbed by the cooling air:

$$q = g_i\,(i_k - t_k) = k \times f\,(t_k - t_m) = l \times c_p\,(t_1 - t_2)$$

Wherein g_i is the specific quantity of steam (lbs/HP$_i$-hour), f is the specific condenser surface (sq. ft. per HP), l is the specific weight of the air (lbs/HP-hr) and C_p is the specific heat of the air. The heat content of the steam leaving the turbine is i_k, the heat content of the condensate t_k, t_1 and t_2 the temperatures of the inlet and outlet air respectively, t_m the mean value of these temperatures and finally, k a heat transfer coefficient.

Studying the working process in the turbine, we may write this more clearly as follows:

$$q = \frac{2528}{\eta_i \times H_0} \times (i_0 - \eta_i \times H_0 - t_k)$$

This shows us that for a given condition of the live steam i_0 the quantity of heat to be transferred from the condenser diminishes with increasing adiabatic drop H_0, i.e. with improving vacuum. At the same time, however, for a given temperature of the fresh air, the important temperature difference $(t_k - t_m)$ and $(t_2 - t_1)$ influencing the dimensions of the condenser become smaller and the quantity of cooling air and the condenser surface increase rapidly. The theoretical minimum cooling air required is determined by $t_2 = t_k$. For instance, for a live steam condition of 213 lbs/sq. in. and 662° Fahr., i_0 = 1351.8 B. T. U./lb. and for an 85 per cent vacuum H_0 = 359·1 B. T. U./lb. and t_k' = 97.5 B. T. U. Assuming a turbine efficiency of η_1 = 78 per cent (dependent on the travelling speed), q = 8800 B. T. U. per indicated HP-hour and at t_1 = 60° Fahr. we have the minimum quantity of cooling air of 517 lbs. per HP-hour. For k = 16.5 B. T. U. per 1° Fahr.,

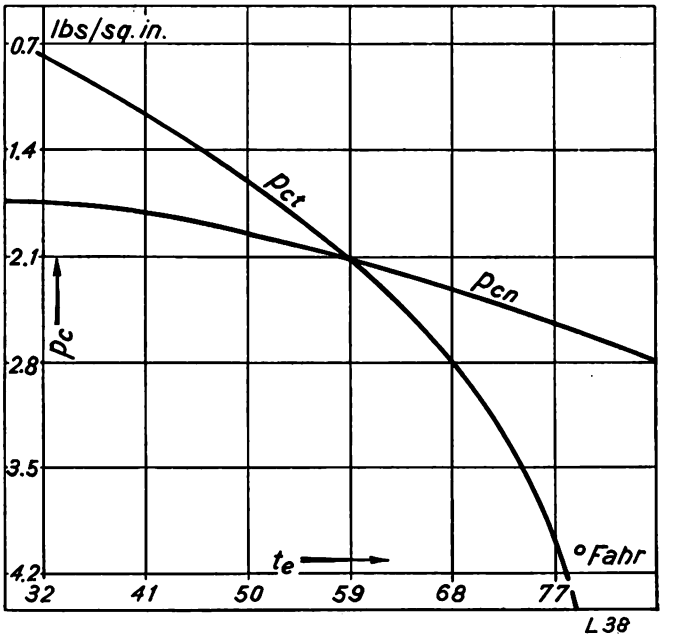

Fig. 10. Vacuum in a dry and wet cooler as a function of t_e = temperature of the fresh air; p_{cn} = absolute pressure in the condenser when using a wet cooler; p_{ct} = absolute pressure in the condenser when using a dry cooler.

Digitized by Google

square foot and hour the specific condenser surface f = 15 sq. ft. If a smaller surface is desired, the plant must be operated with an excess of air.

A 2000 HP locomotive requires a condenser surface of approx. 21 400 sq. ft. and it is readily understood that a space surrounded by such a large and many times subdivided surface cannot be kept permanently tight on a railway vehicle which is continuously subjected to violent jolting.

As may be inferred from Fig. 10, the vacuum attainable in an air-cooled condenser is to a very great extent dependent on the inlet air temperature. The turbine, however, is built for a mean vacuum and cannot utilize the higher vacuum at its disposal during the coldest season of the year. Conversely, the condenser during the warmest season offers the turbine far too low a vacuum. Locomotives of high outputs running in very hot climates would have to be equipped with an air-cooled condenser of huge dimensions in order to produce a good vacuum, necessitating a correspondingly larger quantity of cooling air and fan capacity.

These numerous and serious disadvantages to the air-cooled condenser induced Dr. Zoelly to solve the condensing and cooling problem by the second method indicated above.

In a water-cooled condenser, the condensing surface is formed by a nest of tubes enveloped by the steam through which the cooling water flows. The condensing surface is thus sealed by water so that no air can leak into the vacuum chamber. In addition, the water-cooled surface condenser requires only about one-eighth of the surface of the air-cooled condenser and consequently the designer is not forced to adopt such insecure arrangements as are required by the air-cooled condenser of the Ljungström turbo-locomotive, namely of having the condenser and boiler, for reasons of space requirements, situated on separate bogies. To obviate a large vacuum pipe between two vehicles, which shall be moveable in all directions, the Ljungström turbine is placed on the bogie carrying the condenser and it receives its high-pressure steam through a flexible high-pressure pipe from the boiler vehicle. Such a pipe in case of a rupture would create very serious danger.

Secondly if the boiler, as is usual with locomotives, is mounted on the first vehicle in the direction of travel, then the introduction of an air-cooled surface condenser would necessitate the boiler vehicle being pushed by the turbine and condenser vehicle, which is not conducive for steady and safe running especially on curves and at high speeds.

These few remarks regarding the construction prove how inadequate the apparently simple air-cooled surface condenser is for locomotives.

V. Cooling by evaporation.

If the cooling water heated in a water-cooled surface condenser is exposed in an atomized condition to the action of a current of cool air, considerable evaporation takes place. The air circulating through the «wet» cooler not only becomes heated as in the air-cooled condenser, which we will now designate as «dry« cooler, but it also alters its specific moisture content, i. e. it becomes more or less saturated with water vapour depending upon the prevailing conditions. The requisite heat of evaporation for this process is extracted from the water, which is thus recooled for further circulation. A small quantity W_0, of the circulating water W, is thereby lost and must be replenished by make-up water of the temperature ϑ_0 taken from the tender.

The heat balance of a recooler may be expressed as follows:

$$Q = W(\vartheta_1 - \vartheta_2) + W_0 \vartheta_0 = L(J_2 - J_1)$$

wherein Q represents the quantity of heat to be transferred by the cooler in the unit of time, W and L the quantity of water and air flowing through the cooler in the unit of time. ϑ_1 and ϑ_2 designate the inlet and outlet temperatures of the water. The heat content J of a water vapour and air mixture exposed to atmospheric pressure is determined by the temperature t and the relative humidity φ or absolute water content x. W_0 is very small compared with W and may, therefore, be neglected in the heat balance. For a given Q and W only the temperature difference $(\vartheta_1 - \vartheta_2)$ between the inflowing and outflowing water is fixed, but not the value of the individual temperatures ϑ_1 and ϑ_2, the former determining to a large extent the vacuum which can be secured from the condenser. The heat balance for a given quantity of air and certain initial condition of the air likewise only gives the final heat content J_2 of the water vapour and air mixture, but not the ultimate condition of the discharge. The air is heated nearly to the inlet water temperature and, therefore, is not completely saturated with water vapour at this temperature.

If the ideal case of air utilization could be realized, $J'_2 = J_2$ namely when $t_2 = \vartheta_1$ and $\varphi_2 =$

Digitized by Google

100 per cent, then the minimum air consumption possible equals

$$L_{min} = \frac{Q}{(J'_2 - J_1)}$$

whilst the actual air consumption is

$$L = \frac{Q}{(J_2 - J_1)}$$

The value

$$\varepsilon = \frac{L_{min}}{L}$$

thus equals an efficiency coefficient of air utilization, which may be determined by tests.

In Fig. 11, the theoretical heat absorbing capacity ΔJ of a unit weight of fresh air in a dry and a wet cooler is plotted when the air or the water vapour and air mixture has reached a temperature of 113° Fahr. and in the wet cooler it has become completely saturated with water vapour. In moderate continental climates, the relative humidity diminishes with increasing air temperature approximately as shown

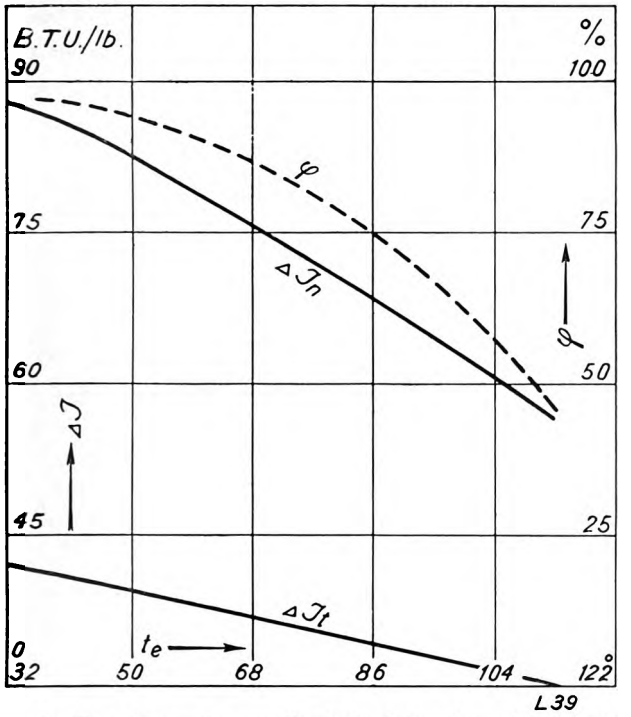

Fig. 11. Theoretical cooling capacity of the air in a dry and a wet cooler as a function of:

te Temperature of the fresh air in ° Fahr.;
φ Relative moisture of the fresh air in %;
△ Jn Theoretical heat absorbing capacity in BTU per lb of air when heated to 113° Fahr. in a wet cooler;
△ Jt ditto for the dry cooler.

by the curve, which latter is also used as a base for determining the heat absorbing capacity. It will be seen even assuming completely saturated inlet air conditions, the absorbing capacity of the air in the wet cooler is 6 to 7 times greater than that of the air in the dry cooler and the air consumption of the wet cooler is also correspondingly smaller. In consequence of this property of air, the vapour portion diminishes with rising temperature to a much less extent than the heat absorbing capacity. The efficiency of the wet cooler and thereby the vacuum obtainable is much less dependent on the fresh air temperature than is the case with a dry cooler. Fig. 10 explains this. In an evaporating cooler, the water to be cooled may even be cooled below the air temperature. The cooling effect only ceases when the water has reached the temperature corresponding to the humidity, that is the temperature at which the air under constant absolute moisture content passes into the completely saturated state.

It is also of interest to know how large the quantity of evaporated water is, for this must continually be replenished from the tender. Let us for the sake of simplicity assume that the heat transfer is effected solely by the evaporation process and not simultaneously by heating of the cooling air, then the maximum limit of the water consumption is:

$$q = G\,(i_0 - H_0 \times \eta_i - t_k) = w_0 \times r$$

wherein w_0 signifies the quantity of water evaporated per lb. of condensed steam and $r = 1121 - 0{\cdot}7\,t$ the latent heat at the temperature t.

Making an allowance for the unavoidable loss of water due to water suspended and carried off by the outgoing blast, the quanity of water lost equals approximately the amount of steam condensed in the condenser.

It is quite evident that only extensive tests with certain cooler designs can inform us as to their efficiency and as to the extent which the system of water circulation, the quantity of water, the water temperatures, the quantity of air and the condition of the fresh air influences the same. When commencing the study of the condensing turbo-locomotives, such tests were available only for self-ventilating cooling towers and, therefore, Dr. Zoelly had to make his own tests in order to design an efficient locomotive cooler.

The cross-current sprinkler cooler shown in Fig. 4 contains no other equipment excepting the water distributing pipes provided with sprinkler holes, mounted within an arched roof. The warm incoming water, in an atomised condition, falls through the current of air produced by the travel of the locomotive and is thereby cooled. This first design of the cooling tender was sufficiently efficient to

Digitized by Google

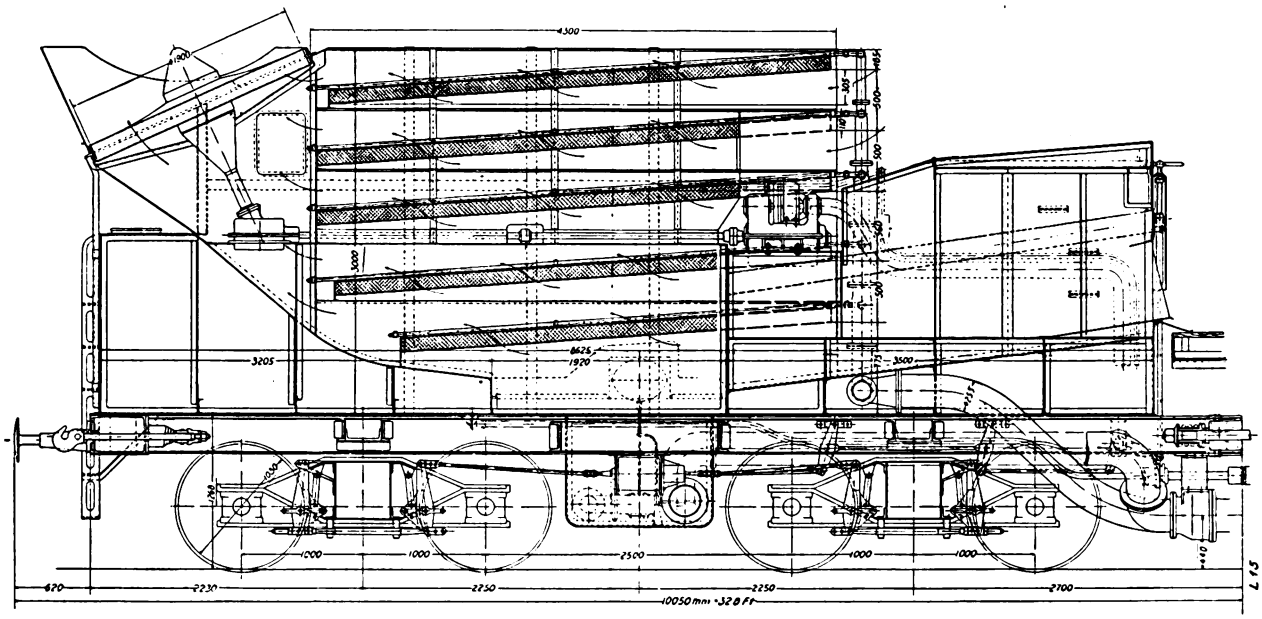

Fig. 12. Cooling tender of the Zoelly experimental turbo-locomotive.

maintain a suitable vacuum for small outputs of from 600 to 700 HP and speeds of from 38 to 44 miles an hour.

However, for larger locomotive outputs such a cooler is insufficient and Dr. Zoelly, therefore, continued to a satisfactory conclusion the tests with a sprinkler cooler commenced by Krupp.

In the experimental cooler so-called Raschig rings, i. e. small pieces of pipe of 0.6″ length and 0.6″ diameter were strewn on a strainer and sprinkled with water. Air was blown in from below on the counter-flow principle. The rings saturated with water provided a large contact surface between the water and the air without, however, offering a large resistance to the flow of the latter. The length of the Z-shaped cooling chamber was arranged to correspond with the maximum length permissible for the cooling tender, Fig. 12.

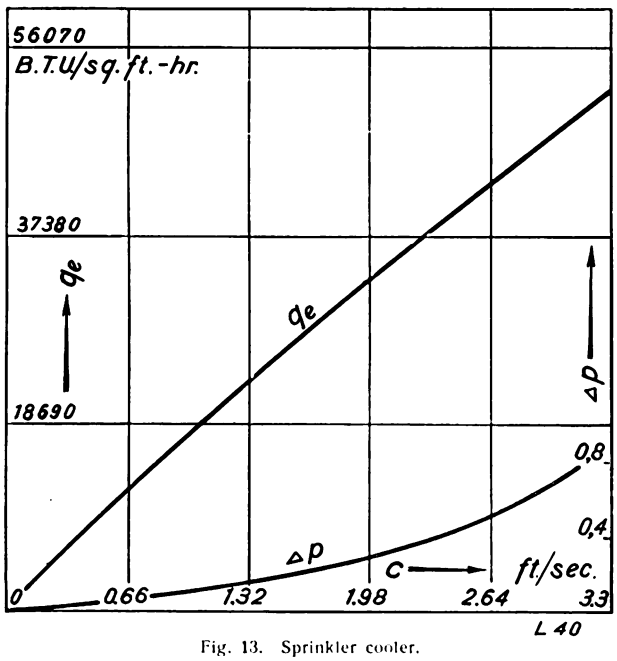

Fig. 13. Sprinkler cooler.
c Velocity of air through Raschig layer; q_e cooling output in B. T. U. per sq. ft. and hour; Δp resistance of air in the chamber, expressed in inches water column.

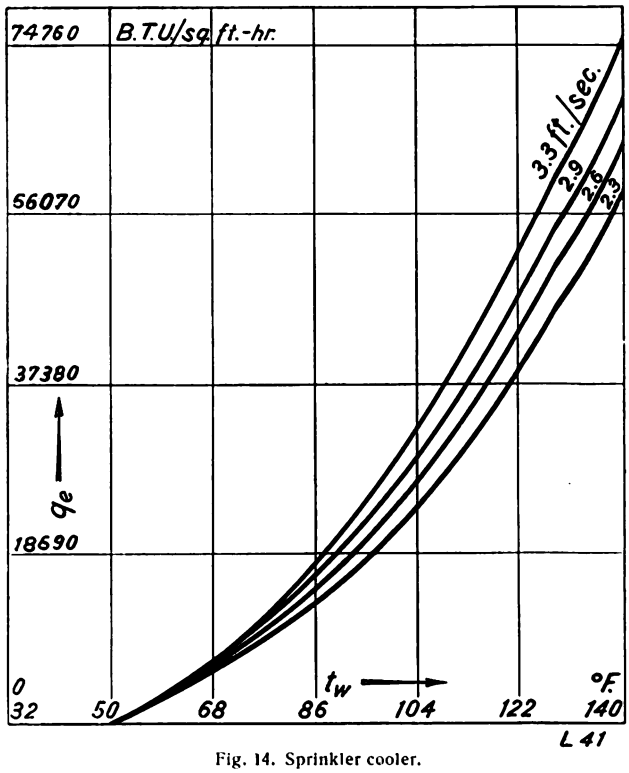

Fig. 14. Sprinkler cooler.
tw Temperature of hot water in ° Fahr;
qe Cooling output in B. T. U./sq. ft.-hr.

Digitized by Google

Figs. 13 to 16 illustrate the main test results. The cooling outputs q_e are given in B. T. U. per hour and square foot of surface covered by the Raschig

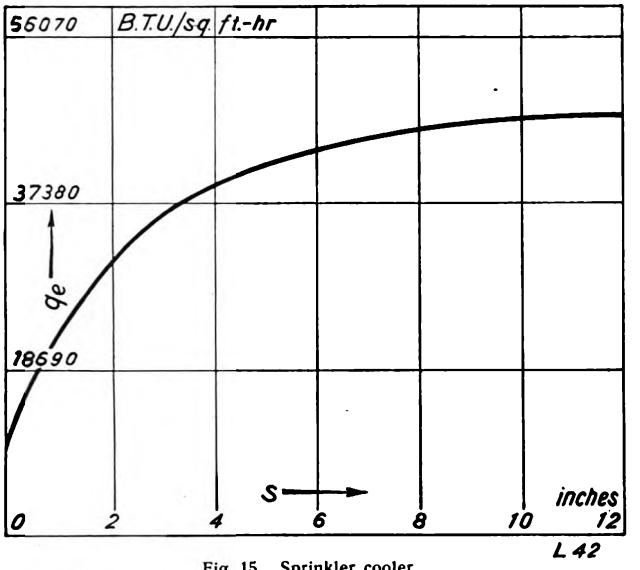

Fig. 15. Sprinkler cooler.
S Height of layer in inches; qe Cooling output in B.T.U./sq. ft.-hr.

ring layer. Where it is not stated to the contrary, this layer is taken to be 0.6" high, the quantity of water prinkled to be 4720 cub.ft. per sq. ft. and hour.

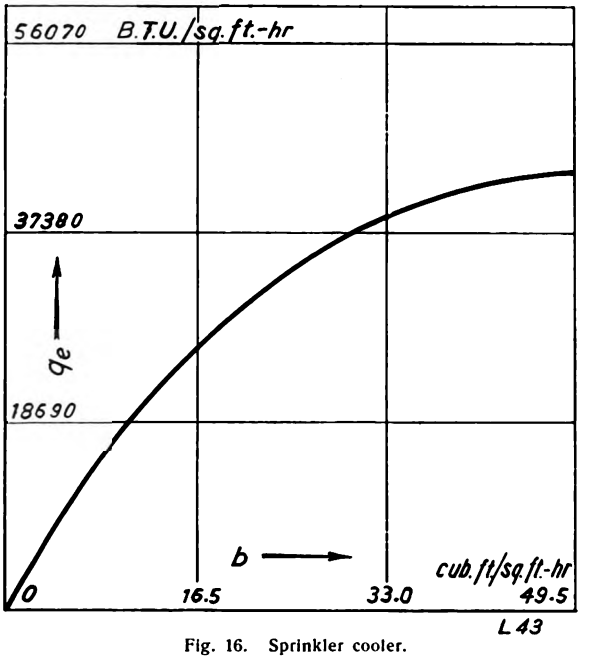

Fig. 16. Sprinkler cooler.
q_e Cooling output in B. T. U./sq. ft.-hr.;
b Water sprinkled in cub. ft. per sq. ft.-hr.

the water temperature to be 112° Fahr. and the «ideal» air velocity through the Raschig layer to be 2.65 ft/sec. The fresh air temperature is 59° Fahr. with a humidity of 65 per cent. Corresponding to the

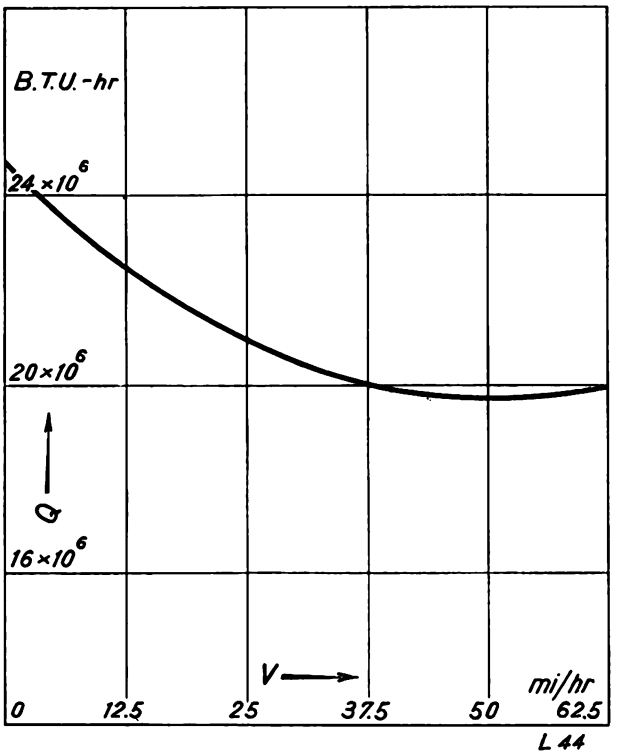

Fig. 17. Variation of required cooling output to the travelling speed for a constant quantity of steam at a rated output of 2000 HP. V travelling speed in miles/hr.; Q heat to be transferred from condenser in B.T.U./hr.

variation of the turbine efficiency with the travelling speed, the cooling output required of the cooler and the vacuum obtainable also varies. Figs. 17 and 18 show these relations. Duly considering the necessary power for driving the fans and pumps, the most

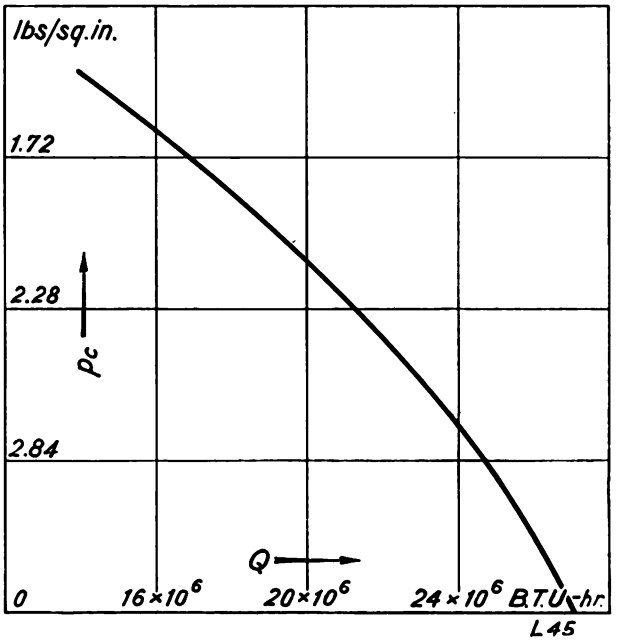

Fig. 18. Vacuum as a function of the required cooling output.
Pc Condenser pressure in lbs/sq. in.;
Q Heat to be transferred from condenser in B. T. U./hr.

Digitized by Google 524829 A

favourable values for space required and height of the Raschig layer, the quantity of sprinkling water and quantity of air will have to be found from calculations based upon the curves illustrated. Since with a condensing locomotive the power required for the auxiliaries plays a more important part than with stationary power plant, the vacuum obtainable is limited and extensive comparative calculations have proved that the most favourable heat consumption is to be expected for a vacuum of from 83 to 87 per cent (24.9 to 26.1″ Hg.). For a 2000 HP Zoelly turbo-locomotive having 213 lbs./sq. in. initial pressure, 660° Fahr. steam temperature and 85 per cent (25.5″ Hg.) vacuum, the power absorbed by the cooler fan is 40 HP, whilst the remaining auxiliaries comprising the cooling water circulating pump, the deaerating pump for the condenser, the condensate and feed pump together require 60 HP. Both groups are separated, the former being on the cooling tender and the latter on the locomotive. As an exhaust blast for the furnace is not available on a condensing locomotive, a furnace fan of from 60 to 100 HP output has to be provided. As a matter of course all auxiliary driving machines should be designed as turbines in order to obtain an oil-free condensate. Both the driving and the driven auxiliaries must satisfy stringent requirements in regard to efficiencies. The units should also be small and light and require no attendance by the locomotive staff whilst in service.

(To be continued.)

The electrical welding of thick bodies.

By A. Sonderegger.

The stresses arising when thin forged or rolled material is electrically welded are so minute that they may be practically neglected when sound material is employed. Nevertheless, with thin and the more so with thick castings there is a tendency for cracks to form in and near the weld when the piece being welded cools. Also when welding thick sections of forged and rolled material, stresses are observed under certain conditions, which may lead to cracks in the weld. This phenomenen manifests itself in quite an unexpected manner especially when the material is initially very cold such as would occur in winter, or in mountainous regions, and when the individual portions of the weld cool down rapidly. In this connection it was commonly thought that the weld solidified too quickly and did not permit the stresses which were generated being relieved. In order to throw light on this subject and to overcome the difficulty, the author made the following tests:

First test. A piece of angle iron of 4.8″ by 1.8″ by 5.8″ by 1.4″ was welded to a piece of stout sheet iron of 1.2″ thickness in the manner shown in Figs. 1 and 1 a. As the angle iron was free at its outer edge, it could yield to the stresses produced by welding the inner edge, as illustrated in Figs. 2 and 2 a. The test was made firstly in the cold state about 32° Fahr. to 50° Fahr. air temperature and secondly by pre-

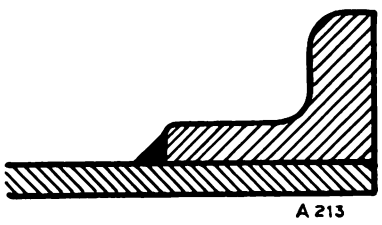

Fig. 1.

heating the material to approx. 570° Fahr. In the cold test, the angle iron raised itself fron the sheet

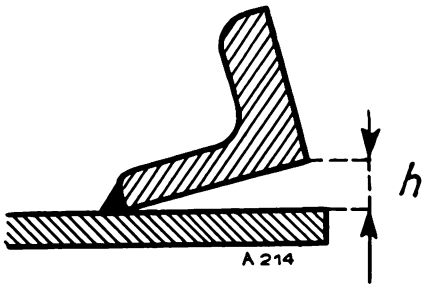

Fig. 1 a.

metal by the distance h = 0.88″, Figs. 1 a and 2, and in the preheated test by 0.44″, Fig. 2 a.

Digitized by Google

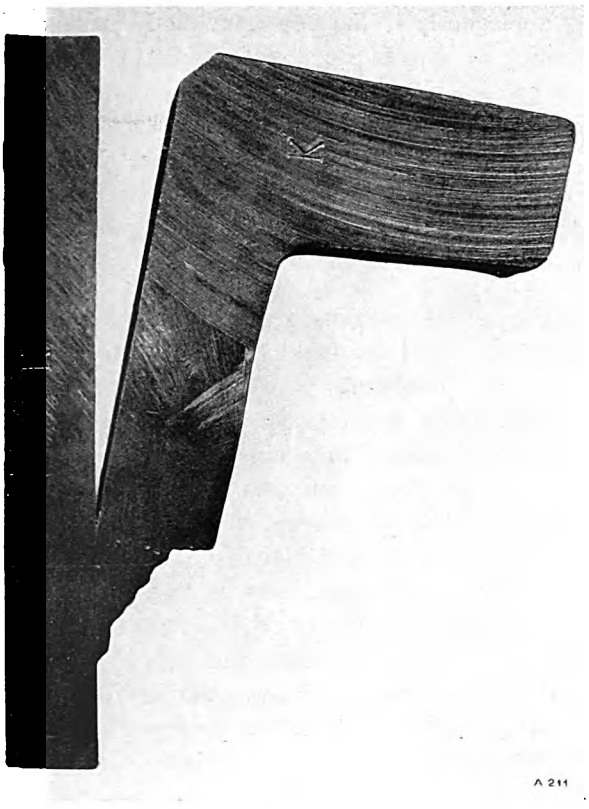

Fig. 2.

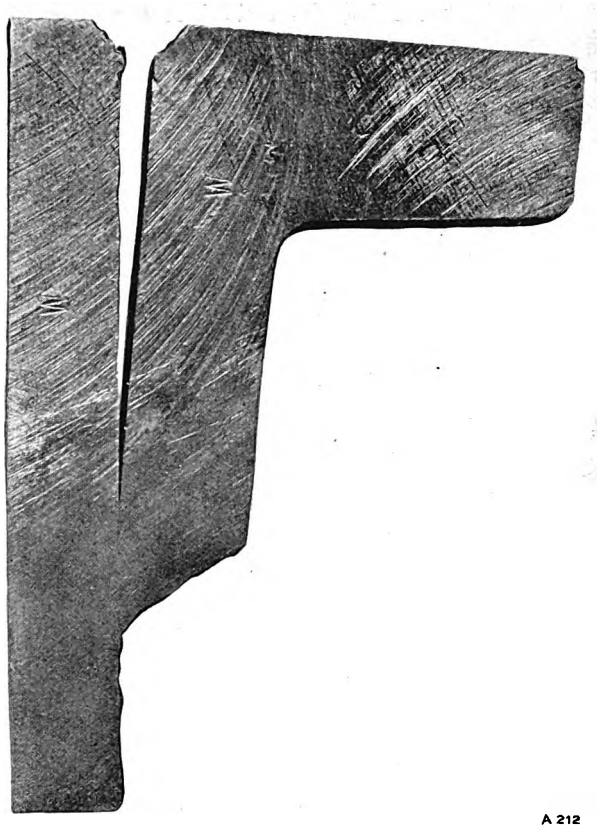

Fig. 2 a.

In order to determine how much elastic stress remained in the weld when the angle iron was restrained from following the normal contraction, the tests were repeated, with the angle iron fastened at its outer edge «b» to the sheet iron, as shown in Fig. 3, this fastening being removed after welding the edge «a». The distance h by which the angle rose then amounted only to 0.08″ both in the cold and the warm test. Thus this fastening had compelled the welded piece to almost completely compensate the contraction produced when cooling down by mechanical elongation. In the cold test, the quantity

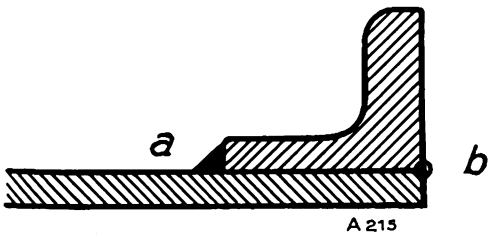

Fig. 3.

of heat produced by continued welding was sufficient to prolong the period of cooling to such an extent that sufficient time remained for the mechanical elongation of the weld.

Second test. Two pieces of metal of 8″ by 8″ by 2″ were welded together by a V-weld as shown in Fig. 4. For special reasons one of the pieces was of mild steel and the other of cast steel. The two pieces were firmly fixed to a base by welding their edges so that they could not yield when welding theV-shaped groove. The test was made in the cold state in such a manner that when one electrode was used up a lapse of time intervened before the application of a second electrode so that the heat flowing into the work had sufficient time to be dissipated. This was done with a view to render the conditions of the test similar to those of a large piece being welded in the cold state.

In heating the test piece up to approx. 570 ° Fahr., the base was naturally also heated and consequently cooled down with the piece being welded.

The first test of welding in the cold state could not be completed since the stresses generated were sufficiently great to tear one of the halves being joined from the base despite of the fact that it had been well welded to the same on the three edges which were free. On repeating the test, this welding to the base was considerably reinforced so that the work being welded no longer tore away from the

Digitized by Google

base. After removing the test piece from the base, the freed end rose about 0.08″, as shown in Fig. 4 a.

The fixed piece had become elastically deformed by this amount through the stress produced. In

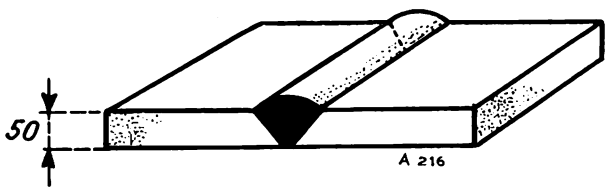

Fig 4.

view of the shortness and thickness of the test piece, this stress was, therefore, very considerable and it can be shown by calculation that the value exceeds the yielding strength of the welding material.

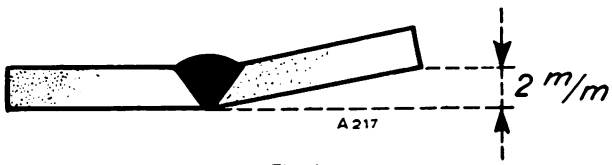

Fig. 4 a.

With test pieces which were welded when warm this phenomenon was not observed and the welded piece when loosened from its base remained perfectly straight. The fixing of the piece of work to the base permitted all the heat stress being balanced by the elongation of the welded piece whilst cooling.

Third test. No special tests were conducted but the results are given of a special welding operation. A two-part forged iron ring of 13¼ ft. inner diameter and a cross-section of 12″ by 8″ had to be electrically welded about 2.4″ deep at the joint. Welding in the cold state was tried but proved unsuccessful in spite of the fact that many kinds of electrodes and methods were tried. The weld always showed fissures. However after the ring had been heated in the manner described above to about 570° Fahr., the welding was performed with absolute satisfaction.

These tests indicate that the thermal condition of the object being welded is of great importance if the stresses which are generated are to be relieved. By heating the edges being welded a contraction of the complete weld and weld material sets in whilst cooling. If this cooling does not take place too quickly, then the desired conditions for electric welding exist namely that by mechanical elongation of the plastic welding material whilst cooling, the stresses due to contraction are eliminated.

Analogously to the former method of autogenous welding in which the stresses due to contraction are considerably greater by reason of the edges being welded being more greatly heated, efforts are concentrated on eliminating these stresses by ulterior heating of the welded piece. With the new autogenous welding process of Proffesor Keel this annealing is said to be superfluous.

When electrically welding work of smaller cross-section the heat produced by the welding process is in itself sufficient to compensate the cooling stresses. Thick and especially cold pieces must be preheated in order to avoid too rapid cooling. If this is done, then even very thick welds can be made quite free of stresses. To prove this, a strap welded to a sheet metal pipe of 1″ thickness was slotted by two slots as shown in Fig. 5. The welds A and B between the two slots were then released after several pairs of centre punch holes had been made to indicate the relative positions of the pipe, and strap. When these distances were checked after removing the welds, no sign of displacement due to elastic stresses was observed.

The welding of thick cross-sections of wrought iron which have been slightly heated offers yet other advantages. If we examine the fracture surfaces of cold welded thick cross-sections, Fig. 6, we find that they are permeated by comparatively large hollow spaces and gas bubbles. With the preheated section, Fig. 7, this is not the case, the fracture being quite uniform and free of pores.

It is also observed that the blow holes are only to be found in the top layer of the weld. If another layer is welded on this layer, then the gas bubbles disappear in the previous uppermost layer. It appears that each layer begins to melt again when applying a successive layer so that the gas bubbles can rise up into the new layer. This condition only arises when the work is preheated since with cold pieces the gas bubbles cannot rise completely. Tests made with material of 1.6″ thickness showed the above-

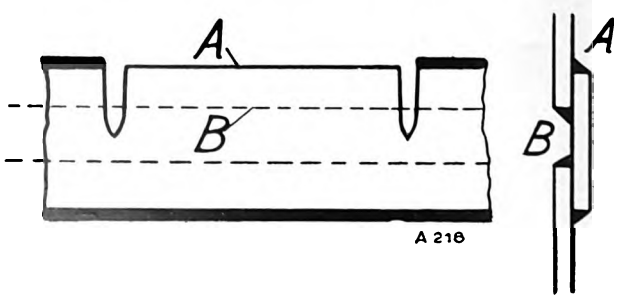

Fig. 5.

Digitized by Google

described conditions existed and even at 1.2″ thickness the number of gas bubbles decreases very considerably.

The above observations were made with different types of electrodes now generally in use, so that they must be taken to apply to all work in general.

These tests offer a plausible explanation for the stress phenomenon mentioned at the commencement of this article, and they prove that if the correct measures are adopted, freedom from stresses may be obtained, and that the electric welding of thick objects, if performed with the necessary care, is quite feasible.

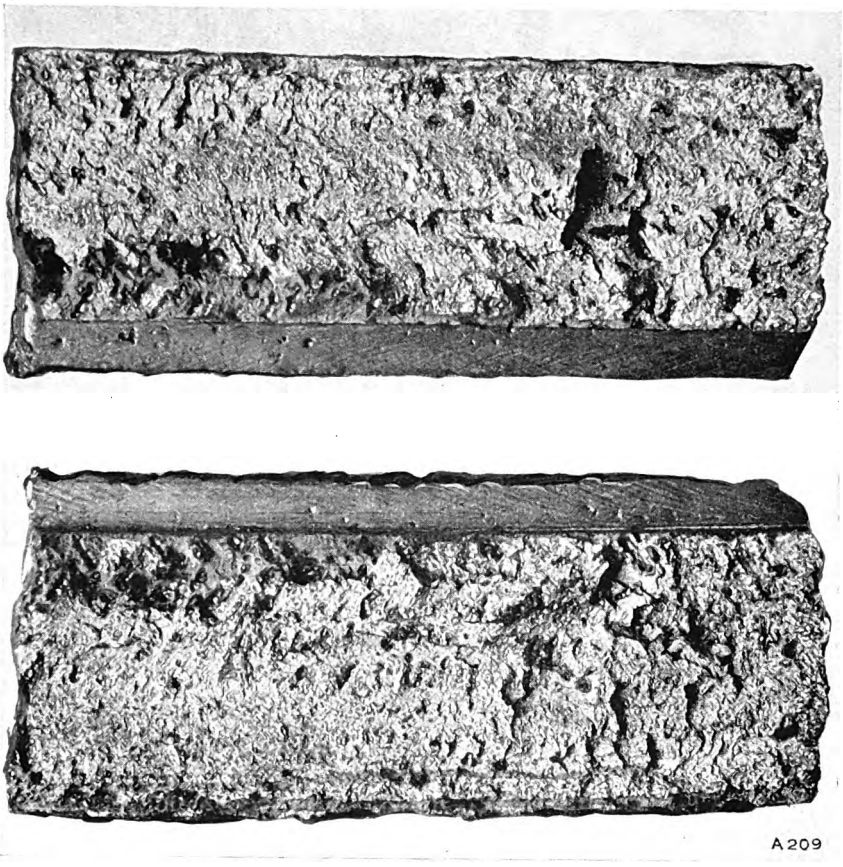

Fig. 6.

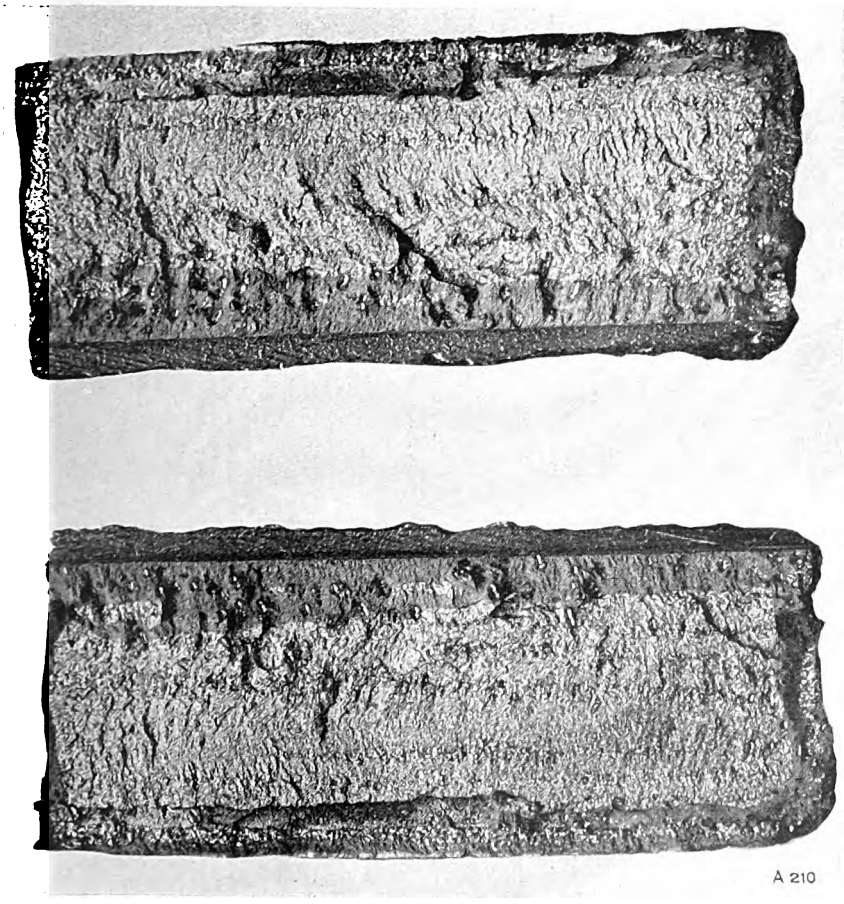

Fig. 7.

Digitized by Google

Miscellaneous.

One of the most important Dutch Navigation Companies, the Koninglijke Paketvaart Mij (K.P.M.), has lately put a new passenger steamer, the „Nieuw Zeeland" into service.

This boat has a displacement of 18.000 tons and is intended for the passenger and cargo service between Australia and the Dutch Indies. The interior appointment is luxurious and in some details very original. Very comfortable and spacious promenades, a deck veranda, swimming bath, gymnasium have been provided besides all the comforts necessary for satisfying the fastidious wishes of the colonial clients.

The steamer is equipped with Zoelly steam turbines designed by Messrs. Escher Wyss & Co. and executed for the greater part in their Zurich shops. There are two turbine sets each of 8000 HP output, each set driving one of the ship's propellors over a Krupp toothed wheel gear.

As this steamer will never return to Europe, it was essential that the most vital and important part of it, viz. the driving machines, should offer every guarantee for absolute reliability in service. Apart from this, the examination of the machines should require as little time as possible in order to shorten the delays in the harbour. Of all prime movers the steam turbine alone fully satisfies these requirements. The choice of this type of engine is the more interesting as the boilers are heated by oil, i. e. a very expensive fuel. The conditions, which have to be fulfilled in order to render a ship economic in service, are very numerous. Besides maximum efficiency, extreme reliability in service, simplicity of design, steady running, accessibility and adaptability to different service conditions are essential. With the „Nieuw Zeeland" there is yet another factor to be considered, viz. the possibility of later on firing coal under the boilers, an important matter, as the shippers have own coal mines in Borneo.

The „Nieuw Zeeland„ was most carefully tested durig long trial trips under all kinds of conditions and at all speeds. These trial trips fully satisfied the owners. This success is the more gratifying, as it confirms that an important branch of our industry, viz. steam turbine manufacture, will find an increasing field of activity for ship requirements, especially in cases where all kinds of fuel are to be fired. This latter point is becoming of daily increasing importance in view of the limited resources of liquid fuel.

Apart from this, the application of higher steam pressures, improved furnaces and scientific service methods promise an ever increasing economy of turbine plants and consequently also further and larger fields of application.

Publishers: Escher Wyss & Co, Zurich (Switzerland).
Printed by: Siegfried & Co., Zurich (Switzerland).
London Office: Escher Wyss & Co., 20 Grosvenor Gardens, Westminster, London S. W. 1.
Tokyo Office: Escher Wyss & Co., Marunouchi Building, Room 322, Tokyo.

Digitized by Google

Ja 8'31

ESCHER WYSS NEWS

Volume I

4

July 1928

Published by Escher Wyss & Co. S. A.

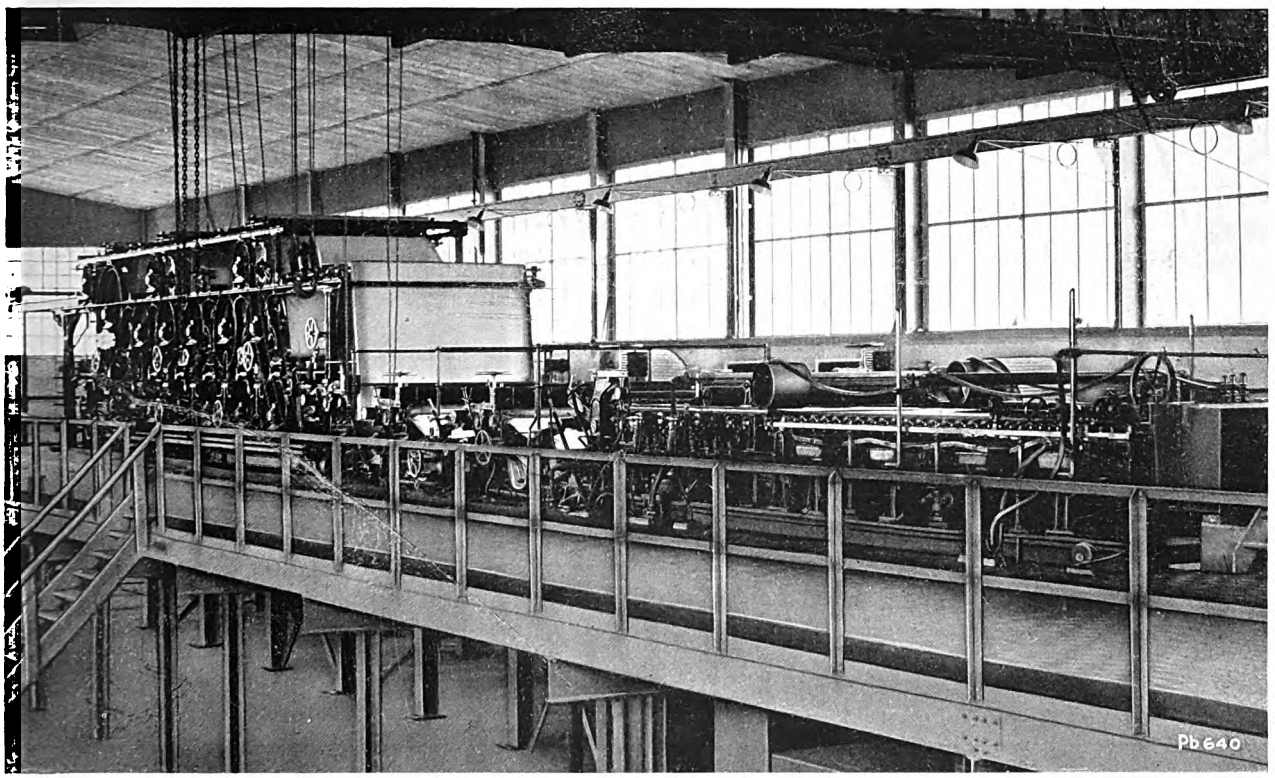

Paper-making machine of the Stroostoffabriek "Phoenix", Veendam.

Contents

	Page
1. The paper-making plant of the Stroostoff-fabriek «Phoenix», Veendam	107
2. The Escher Wyss variable speed gear. A new friction gear with large and constant range of regulation	112
3. The 710 lbs/sq. in. Zoelly bleeder turbine of the Arnau Paper Mill (Czechoslovakia) .	121
4. The electric steam generating plant in the Padalarang Paper Mill	127
5. Apparatus for concentrating waste sulphite liquor	132

AGENTS FOR UNITED STATES
THE NATIONAL POWER MACHINERY CORP.
2912 CHANIN BLDG., NEW YORK

Digitized by Google

Products of Messrs. Escher Wyss & Co.

Steam Turbines

"Zoelly" system

Normal condensing land and ships' turbines; locomotive turbines; bleeder turbines; back-pressure turbines; mixed-pressure turbines; low-pressure turbines; small turbines; high-pressure turbines; condensing and preheating installations.

Steam Boilers

Electrically heated boilers; horizontal fire tube boilers; Cornish boilers; marine boilers; water tube and vertical tube boilers; boiler work of every description.

Compressors

High-pressure turbo-compressors for mines and other purposes; turbo-blowers for blast furnaces; converter plants for steel works; coke oven blowers; special gas blowers for the chemical industry. Completely automatic regulators for constant pressure, constant volume and other purposes, automatic blow-off regulators; volume integrators etc.

Autovapor Compression and Concentrating Plants

Special turbo-compressors for water vapour; automatic vapour pressure regulators; apparatus for neutralizing vapours.

Water Turbines

with Francis, Pelton, propeller and Kaplan wheels. Complete high-pressure pipelines. Rotary valves. Precision oil-pressure governors.

Pumps

Equipment and installations for complete waterworks. High-pressure and low-pressure turbo-pumps, water storage pumps.

Paper-making Machinery

Installations for complete paper mills; paper-making machines of every description and for every working width; digesters; beaters; edge runners; pulp grinders.

Waste Utilization Plants

for carcases and slaughter house offal; fish meal factories for any capacity.

Ships

Complete paddle wheel boats and screw steamers for lakes and inland navigation.

Special catalogues sent to prospective customers on application.

Digitized by Google

ESCHER WYSS NEWS

PUBLISHED BY MESSRS. ESCHER WYSS & Co. S. A.

VOLUME I — No. 4 — JULY 1928

The "Escher Wyss News" will be published periodically in bi-monthly issues. Reprinting of articles or illustrations appearing therein will only be permitted when source thereof is duly acknowledged. Single numbers 1/-; one year's subscription 5/-.

The paper-making plant of the Stroostoffabriek "Phoenix", Veendam.

By F. Wyss.

The Stroostoffabriek «Phoenix» in Veendam, well-known for its excellent products, in 1926 decided to take up the manufacture of paper, using for this purpose a part of the straw pulp manufactured at their own mill. Arrangements were accordingly made for the production of 10 to 12 tons per 24 hours of paper not containing any wood, especially hard note paper having an average content of 75 per cent of straw pulp and 25 per cent of sulphite pulp. The former is supplied to agitator chests after leaving the bleaching engines and is thence pumped to the paper mill proper, where it is thickened and then handled by the edge runners. The sulphite pulp is either purchased already bleached and supplied direct to the edge runners, or it is bleached in the mill and then proceeds along the same route as the straw pulp. The beaters are specially designed for their purpose, and will not be described in detail here. Also the apparatus for solving the resin, alum and china clay are designed according to the most recent experience, provision being made for thorough cleaning with fresh water.

Being fine paper manufacturers of world wide repute, the purchasers of this plant made a special point of erecting the mill in such a way that it could easily be kept clean and in proper order. The machines had to be installed in lofty and light rooms, so that they would be readily accessible and permit of easy manipulation.

For this reason the owners objected to steam, water and pulp piping being laid in pits and channels, where large quantities of dirt readily accumulate. The shafting and transmission was also to be accessible everywhere without endangering the operators. It was, therefore, decided to erect the edge runners, beaters and paper-making machine on the first floor, which rendered it possible to drive these machines from the ground floor and to arrange all the piping as desired.

Five years previously, Messrs. Escher Wyss & Co. had supplied in Java a complete paper-making plant to a group interested in the «Phoenix» Paper Mill, which machine proved very satisfactory. As a result of this the firm received the order for the «Phoenix» paper-making machine. Fig. 1 (title page) and Fig. 2 illustrate this machine. The machine room is wide enough to accommodate a second machine. The whole building is an iron structure and the paper machine itself stands on an iron framework, which at present does not occupy the full width of the building. Only the support of the dry end was made of reinforced concrete, as the floor for catching the waste water had anyhow to be made of concrete and as it was important that the shaking of the strainers should not set up undesirable vibrations in the building.

The drawing enclosed in this number illustrates the lay-out of the machine which has a working width of 84" and is designed for a production of from 10 to 12 tons per 24 hours. The junction of the concrete substructure with the part supported by the iron framework as shown in Fig. 3 is interesting and has proved very satisfactory.

AGENTS FOR UNITED STATES
THE NATIONAL POWER MACHINERY CO.
2912 CHANIN BLDG., NEW YORK

Digitized by Google

The beaters are discharged by a centrifugal stuff pump situated on the ground floor, which pump delivers the stuff to one of the two vertical agitator chests, visible in the background of Fig. 2.

Though vertical agitator chests are not as generally used as horizontal ones, yet many makers of fine paper prefer them since they mix the stuff exceedingly well and are easily kept clean, especially when lined with tiles as in the case under consideration. Another advantage is that the central column can be extended above the level of the stuff, thus dispensing with a stuffing box. Spirting of the stuff and consequent formation of lumps is also completely avoided.

The control of the stuff, Fig. 4, from the agitator chests, was designed by H. L. Korschilgen. The method employed had already been used on four other paper-making machines partly built by Messrs. Escher Wyss & Co. and had been found very suitable for vertical agitator chests. The stuff then passes from one or the other of the agitator chests to a lower copper chest. The flow of the stuff is regulated there by means of a float and trap in such a manner that the level in the box is kept constant.

From this box the stuff is then pumped by means of an Escher Wyss centrifugal pump to a higher overflow chest equipped with a stuff regulating valve. The excess quantity of stuff flows back to the lower box through the overflow pipe. If, for instance, the operator has to partially close the regulating valve, the overflow increases; the level of the stuff in the lower box, therefore, rises, causing the float trap to close. Conversely, the trap opens when larger quantities of stuff are withdrawn by means of the regulating valve. Mixing with the water from the strainer is effected beyond the regulating valve. The strainer water is regulated by a valve under the compensating funnel, which is mounted at the end of the pressure piping of the water pump for the strainer.

The stuff then reaches two rotary strainers each 2 ft. diameter and 6½ ft. active cylinder length via the turnable sand trap. The two strainers discharge into a common central channel, whence the stuff is conducted to the breast box. Very evenly distributed, the stuff now reaches the wire table, Fig. 5. This latter is designed for a width of 94″ and a wire length of 66 ft. The inclination of the wire is adjustable during operation in the well-known manner and the work may be performed with an incline of approx. 2″ and up to a decline of 6″. With most of the papers produced by the machine the wire is operated on the incline in order to obtain a non-clouded uniform sheet.

The deckle carriage is equipped with 3 high foam laths and may be adjusted on each side independently by means of handwheels, having enclosed bevel wheels and spindles. The supports carrying the deckle carriage are provided with a second fork lying somewhat higher in which the

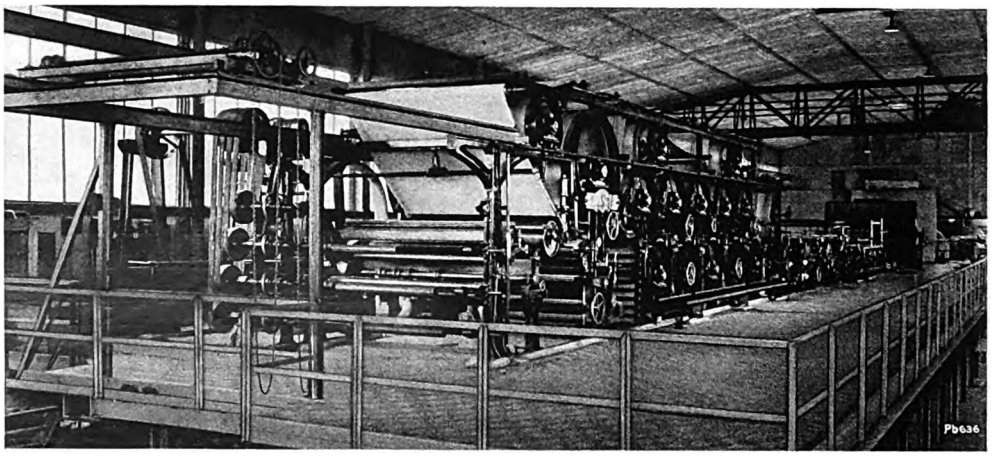

Fig. 2. Paper-making machine (viewed from the dry end) of the Stroostoffabriek "Phoenix", Veendam.

Digitized by Google

deckle carriage may be placed by hand or by crane when changing the wire. This constructional detail, which has been employed for many years by our firm, has been universally accepted as practical by the customers.

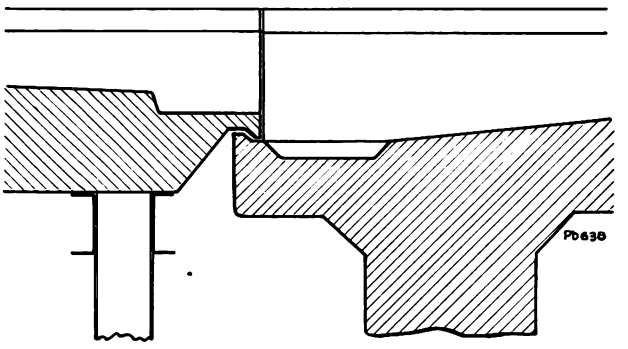

Fig. 3. Transition from the concrete substructure to the iron framework.

Between the breast roll and the first table rolls a so-called wire table of bronze is provided, Fig. 6, tapered at both ends and designed symmetrically so that it may be turned round after wearing on one side and be further used. The apron covers the wire table to about 1/3 of its width. An excessive dehydration must be avoided in the region between the end of the apron and the edge of the wire table and instead a slight preliminary dehydration should commence, allowing of a very thin film of well-clotted fibres to form, before the main dehydration takes place. Many paper makers attach special importance to this factor and very frequently the wire table is even placed still nearer to the table rolls in order to obtain a longer apron. In this case 1 to 2 table rolls follow on the breast roll and then the wire table. To ensure a long life of the wire, the breast roll is equipped with roller bearings, as shown in Fig. 7. To relieve the roller bearings from lateral thrust, which may be very considerable with violent jolting and a heavy breast roll, adjustable screws are provided, which take up this thrust. The roller bearings are, therefore, stressed by radial forces only. This system has been adopted in many machines and has given entire satisfaction. The first bearings of this type have now been in service for five years and have never required any adjustment. Despite the many machines provided with such bearings, we have never received the slightest complaint, a proof that our design is highly satisfactory.

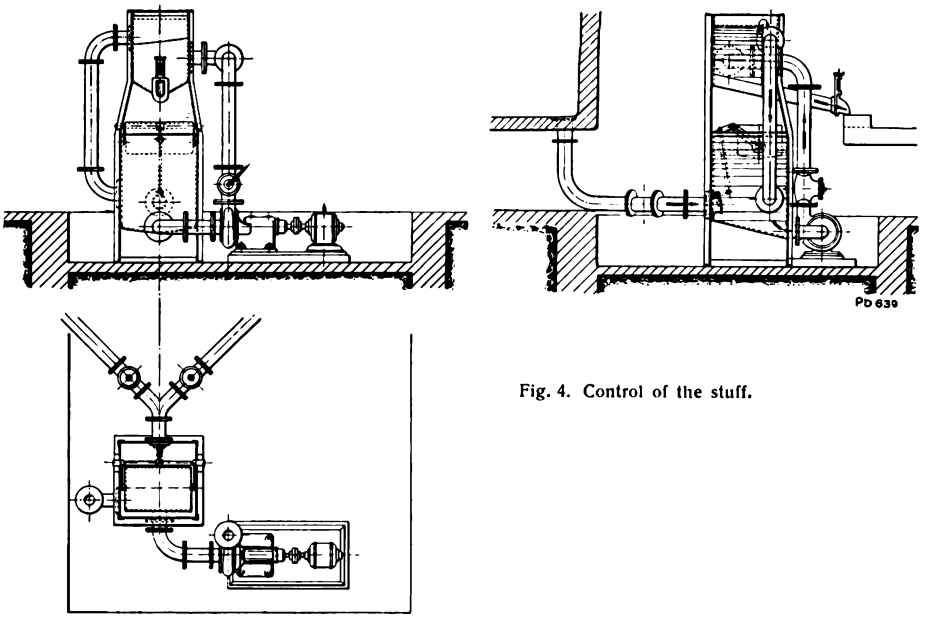

Fig. 4. Control of the stuff.

Digitized by Google

The table rolls are also provided with thrust screws to obviate the wearing away of the collars. Figs. 7 and 8 also show the «thekalemit» lubricating system used throughout the machine. This system not only has the advantage of great cleanliness and economy,

The suction water is deaerated in the tank and the excess may be led, if desired, to the tank for the strainer water II, whence it is pumped to the tapered save-all or in exceptional cases into the adjoining tank for the strainer water I, which is

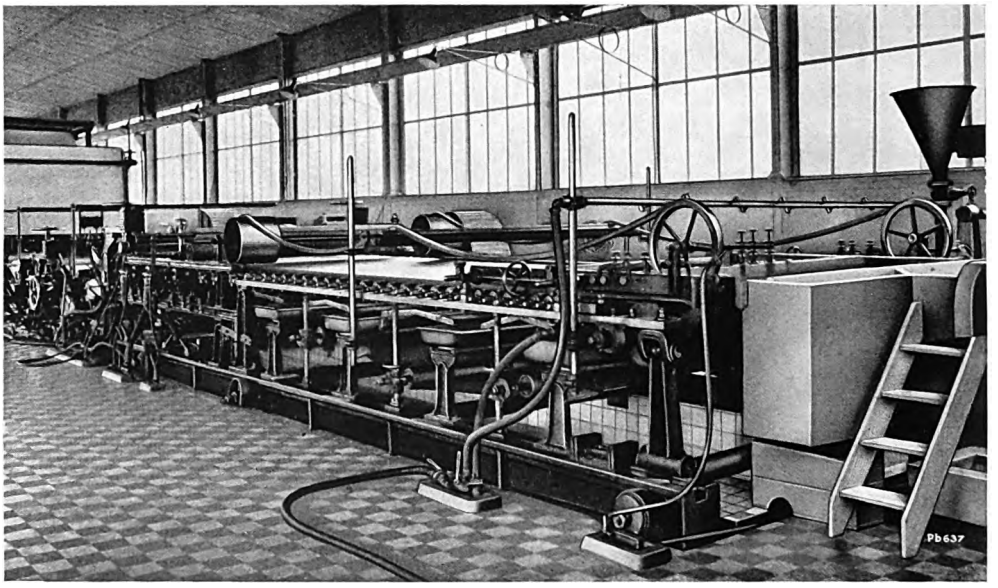

Fig. 5. Wet end of the paper machine.

but also avoids damage of the machine inasmuch as no part has to be removed when lubricating the bearings. In addition, the machine is much more quickly lubricated than with Stauffer lubricators.

The equipment for producing the vacuum is shown in the annexed drawing of the machine. The main piping, to which all suction boxes are connected, is carried to the ground floor and terminates in a so-called jet head, which receives water under

then pumped back to the agitator chests as diluting water.

In addition it is possible to lead the strainer water I straight to the pump, as shown in section E—F, without previously using the tank whereby this tank then only receives the overflow. All 3 tanks are carefully lined with tiles and owing to their easy accessibility are readily kept clean.

The couch press, by the special instructions from

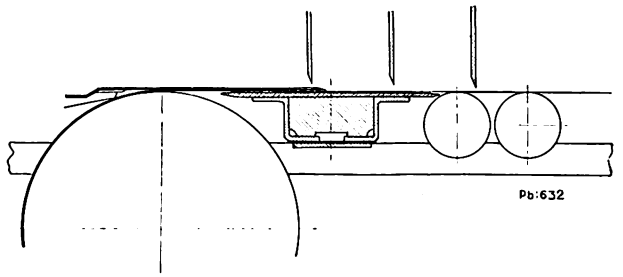

Fig. 6. Stuff supply at the paper machine.

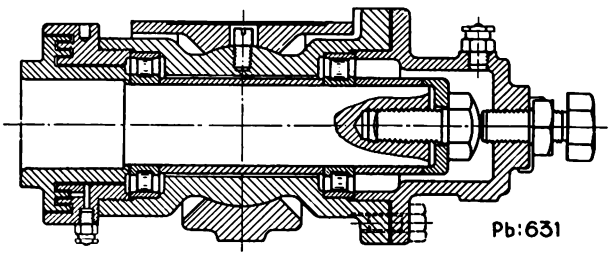

Fig. 7. Breast roll roller bearing.

pressure from a centrifugal pump thus producing an ejector effect. The air and water mixture is discharged into the suction water tank and the water for the above-mentioned centrifugal pump is taken from this tank so that it makes a complete cycle.

the client, has a lower roll lined with rubber, which is seldom employed nowadays. Provisions were made for interchanging this roll with the wet press rolls, only the face length being somewhat greater and the degree of hardness of the rubber differing.

Digitized by Google

The upper roll of 20″ diameter is lined with copper, and likewise the «Kittner» doctor roll, which procedure is also unusual. The three presses are designed as ordinary wet presses. The first two are provided with a felt washer having 2 rolls. The third press is a reversed press. All lower rolls, which are covered

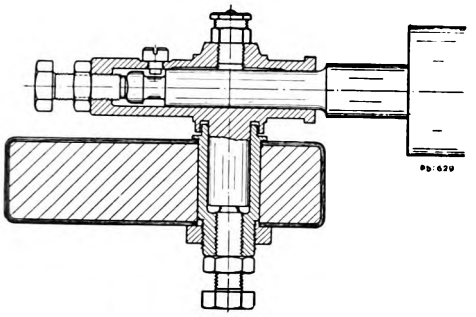

Fig. 8. Fixed roll bearing.

with rubber, are strictly interchangeable, and likewise the upper granite rolls. A felt suction box was not provided, as it was considered its use would be offset by the greater wear of the felts. The felts all have the same length of 35 feet. A stretching roll with brass spiral was provided for each felt as a matter of course.

The dry end of the machine consists of 10 paper driers of 50″ diameter, driven in two groups of 5 drying cylinders each. The first group embodies 2 upper and 2 lower paper driers with one felt drier of 40″ diameter for each of the upper and lower set of driers, whilst the second group comprises 3 upper and 3 lower paper driers with one felt drier of the same design for each of the upper and lower groups. As the felts have to absorb the greater part of the moisture at the beginning of the dry end, 1 felt drier was apportioned to 2 paper driers, whilst later on 1 felt drier suffices for 3 paper driers. In order to be able to regulate the temperature of each drying cylinder independently, a seperate valve and a separate condensate trap was provided for each paper drier and each felt drier. The fitting used by Messrs. Escher Wyss & Co. and shown in Fig. 9 for the intake of steam and discharge of condensate is provided with a white metal ring at the point of internal sealing, which like the outer stuffing box packing may be readily renewed. The placing of the machine in the first floor greatly enhances the life of the lower drying felts, as they can be thoroughly ventilated and are, therefore, not liable to rot. This is an important item of the lay-out.

A two-roll smoothing press, which generally has to work very heavily, follows on the driers. Then follows a final drier of 72″ diameter with felt drier. A calender stack was not considered necessary since most papers anyhow have to be calendered in a super-calender. The smoothing press alone suffices to produce an excellent machine gloss.

The cooling cylinder of 20″ diameter running in ball bearings takes the place of a paper guide roll. The longitudinal slitter is equipped with 5 pairs of circular knives.

The paper is moistened by means of a sprayer receiving its water from a reservoir situated in the roof of the building. Thereby a constant water pressure is obtained ensuring uniform moistening of the paper. The reeling apparatus is designed for the use of four reels, drums not being employed. On completion the reels may be transported by means of a crane to the ground floor, where two 10-roll Haubold super-calenders are erected.

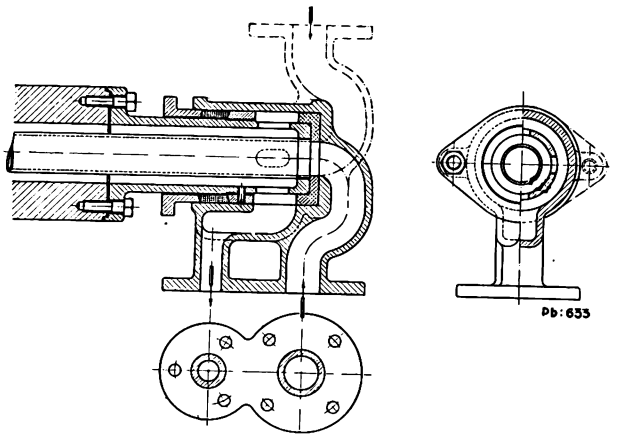

Fig. 9. Steam fitting for drying cylinder.

The steam piping is situated in the ground floor and is efficiently covered with lagging. A main stop valve, a reduction valve, an emergency valve and a safety valve are part of the equipment. The condensate is collected in the ground floor and thence pumped back to the boilers.

The variable part of the machine is driven by a d. c. motor with differential connections and automatic speed regulation. The driving motor is

Digitized by Google

situated in the ground floor, as shown in the drawing, and with its two pulleys, drives two countershafts. Each part of the machine may be connected and disconnected whilst running by means of the Escher Wyss friction clutch, Fig. 10. This clutch has the great advantage of operating smoothly when being connected and the speed is, therefore, not suddenly raised from zero to the maximum. This is of special importance for the life of the wires.

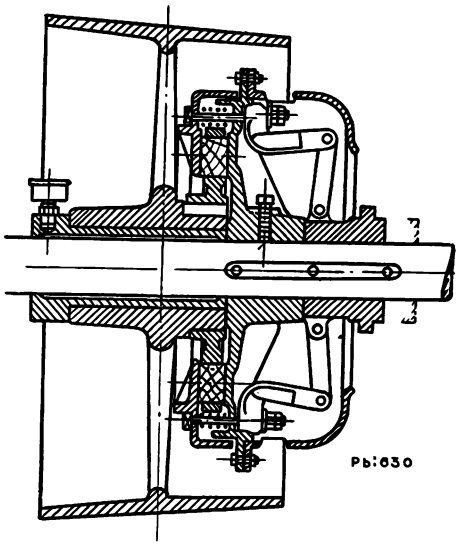

Fig. 10. Friction clutch.

The clutches are easily adjustable and require no further attention since the wooden blocks, which alone are subject to wear, have only to be renewed after many years of service.

The machine described above was put into service in October 1927. In November of the same year the same client ordered a further machine for manufacturing fine paper.

This is undoubtedly the best proof that the confidence placed in our firm has been fully justified.

The Escher Wyss variable speed gear.
A new friction gear with large and constant range of regulation.

By W. Vogel.

1. General remarks on friction gears.

The expression «friction» generally produces a negative impression on laymen. They think of lost work, heating and logically of wear, and the friction gears hitherto on the market certainly substantiated such opinions. Primitive and frequently also faulty designs combined with the choice of unsuitable materials had their share in establishing the bad reputation of friction gears. Apart from this, doubts are encountered in many quarters regarding the possibility of being able to permanently and reliably transmit power by means of friction gears. The latter objection is most easily refuted by alluding to the classic example given in the development of railway vehicles. The first railway running over level ground operated with racks, and only at a later period one ventured to turn the friction between the wheels and rails to practical account, and to build the so-called adhesion railways, which are taken for granted nowadays.

The above-mentioned objections regarding bad efficiency and rapid wear were certainly justified as far as the designs hitherto found on the market were concerned. These gears, owing tho their limited field of application, were mostly only used as makeshifts, and in many cases their cumbersome dimensions and limitation to small outputs rendered them altogether useless.

When an engineering works like that of Messrs. Escher Wyss & Co. decides to take up the manufacture of friction gears, which shall operate with high efficiency and above all reliably, its decision is governed by two factors, firstly, that the difficulties are not insuperable and may be overcome by suitable design and correct choice of materials, and secondly that there is a great demand in all industries for a gear by which the speed of the driving machine can be varied independently of the source of power. Escher Wyss & Co. have, therefore, shunned no means to produce a gear, which shall fully comply with all these requirements.

Digitized by Google

STRAW PULP MILL PHŒNIX VEENDAM

ERECTION PLAN FOR THE PAPER MACHINE OF 2100 mm WORKING WIDTH

Filzlänge	Length of felt
Deckelriemen	Deckle straps
Registerwalzen	Table rolls
Sauger-Wasser	Backwater from suction boxes
Siebwasser	White water

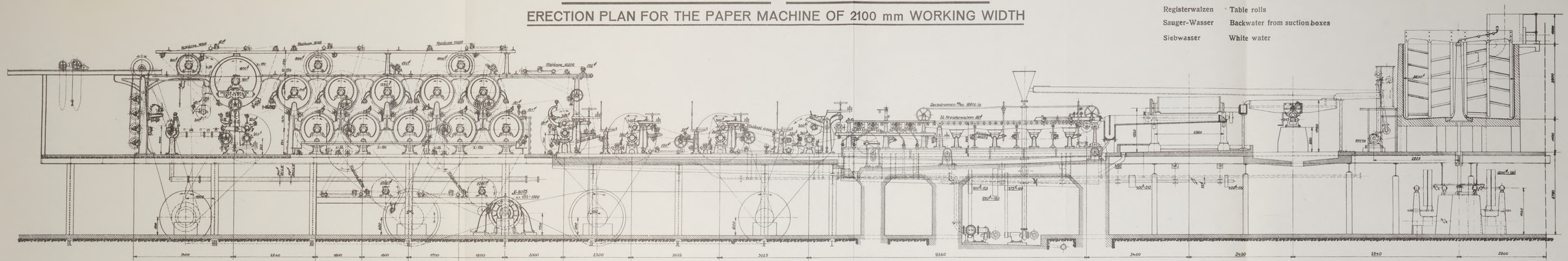

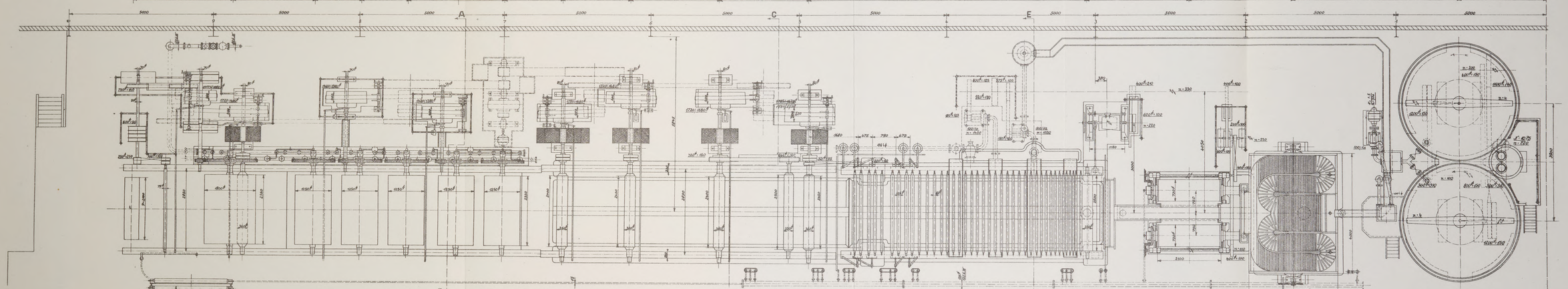

SECTION A-B

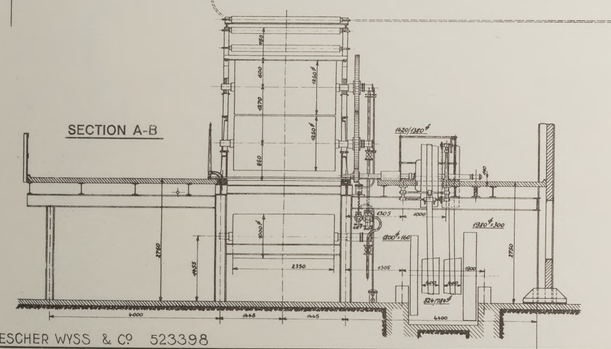

SECTION C-D

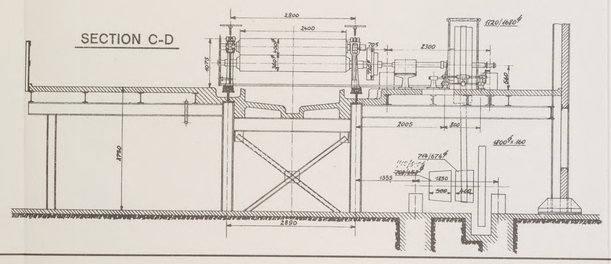

VIEW OF WATER TANK

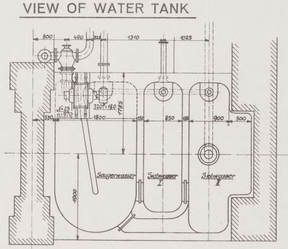

SECTION E-F

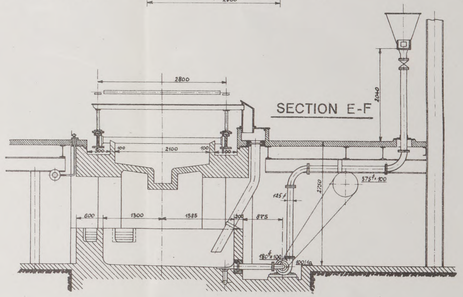

ESCHER WYSS & Cº 523398

EWC 523398

Digitized by Google

Digitized by Google

2. Principle of the Escher Wyss variable speed gear.

The Escher Wyss variable speed gear is a differential gear and belongs to the class of friction gears. Its action depends on the rolling of hardened and ground rollers on hardened surfaces. By shifting the mutual points of contact, a uniform speed variation within certain limits is possible whilst running, without altering the load.

The principle of the gear is described in the following lines: the four chief elements of the Escher Wyss gear are the three iso-axial circular paths, of which the driving path is designated by the numeral 1 in Fig. 1, the driven path with numeral 2 and the fixed path with numeral 3, and finally the rollers or balls 4 rolling within these paths. By influencing one of these four parts, a displacement of the points of contact may be achieved. The resulting alteration of the radii causes an enlargement or diminution of the cooperating rolling paths and consequently also a corresponding variation of speed. The illustration further informs us that according

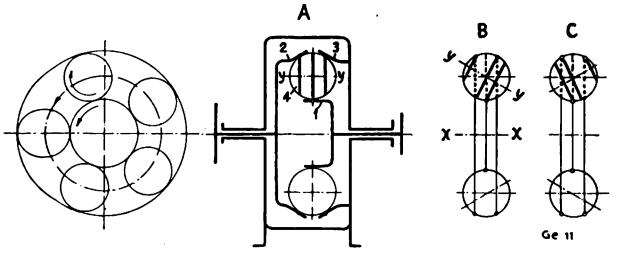

Fig. 1. Diagrammatic sketch of a ball gear.

to the direction in which the ball axes y—y are set, the rolling circuit 3 becomes larger or smaller than the circuit 2, with the effect that the path element 2 turns either in the same or opposite sense of 1.

When the transmitting bodies 4 are rollers, the method of regulation is slightly modified, inasmuch as these rollers are not displaced directly but take up their respective positions by displacing the paths 1, 2 or 3. In Fig. 2, 1, 2 and 3 again designate the rolling paths and 4 the transmitting bodies, in this case mushroom-type rollers. The displacement of the points of contact of these rollers on the disc-shaped path 2 effects the desired change of the gear ratio through the pertinent alteration of the corresponding rolling circuits. According to the function allotted to the three elements either driving, driven or fixed, the following combinations result:

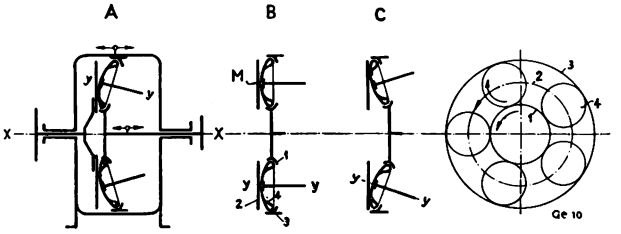

Fig. 2. Diagrammatic sketch of a roller gear.

a) 1 driving, 2 driven, 3 fixed.
Geared approx. 1 to 1 with speed reduction down to 1 to ∞ (standstill of the driven shaft);
b) 2 driving, 1 driven, 3 fixed.
Geared for speed increase;
c) 1 driving, 3 driven, 2 fixed.
Geared 1 to 1 with speed reduction down to 1 to ∞ (standstill of the driven shaft) and 1 to 1 with speed increase.

In this connection a specially characteristic feature of the roller gears must be mentioned, viz. the so-called centre M. When the axis y—y approaches the perpendicular on disc 2, the following special case results:

The rolling circuit on the rolls is continuously reduced and finally becomes a fulcrum. The progressive cycloidal movement on disc 2 thereby becomes a local rotation. Roller system 4 and disc 2 then rotate at the same speed about axis x—x. As the stressing of this point M is increased in that case owing to the reduced transfer of heat, this point should not be exposed to a permanent load. With the larger types of gears this matter is duly taken into consideration inasmuch as the centre position is automatically passed over. With the normal types this phenomenon sets in at a gear ratio of 1 to 3·5.

The form of the transmitting bodies 4, either balls with substantial axes, balls with auxiliary points of support (a modification of the EWC-gear under consideration) or mushroom-shaped rollers, depends on the requirements to be satisfied in regard to the gear ratio. If the gear is to be reversible, this factor naturally also is determinative. The same factors are decisive for the profile of the paths 1, 2 and 3.

Digitized by Google

A further important element of the E. W. C.-gear, and so to say the very soul of same, is the device for producing the necessary pressure at the points of contact, required for power transmission. The magnitude of these pressures depends for the one, on the peripheral forces acting on the respective points, for the other, on the friction coefficient μ, which latter varies according to the material and the condition of same. The contact pressure may be produced by manifold means, for instance, through springs, hydraulic pistons, electromagnets, or the wedge action of two oblique or spiral surfaces between which friction-reducing balls are inserted to obtain maximum sensitiveness. A device of this kind operates proportionally to the torques of the induced output. The axial component produced in proportion to this torque, is communicated in a corresponding measure over the rolling bodies to all points of contact. To ensure the contact between the individual gear elements at no load, i. e. for a torque approximating zero, a light auxiliary spring is provided. The gear elements, and the pressure bearings are, therefore, only temperorarily stressed with the minimum pressure required for power transmission. The favourable influence on the efficiency at partial loads and on the life of the gear

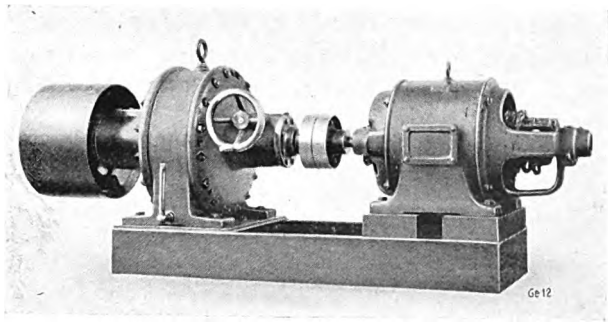

Fig. 3. Gear, type K.

is apparent. With the other systems mentioned operating with constant pressure, the latter must be chosen to suit the maximum transmission moment whether this stress occurs frequently or rarely.

One of the chief reasons why the Escher Wyss gear is so much more advantageous than the friction gears hitherto in use, is the point-like contact at the places of contact as compared with the surface contact of the older designs. This results in an almost complete elimination of the losses due to gliding friction caused by the speed differences within the contact surfaces. The principal causes of bad efficiency and rapid wear are thus suppressed.

Gears with point-like contact naturally necessitate a much greater specific pressure. The materials hitherto used, such as leather, wood, bronze and iron are unfit. Only hardened special steels, capable of resisting the high pressure with sufficient safety, may be employed. To compensate the local heating caused by the high specific pressures, the gear parts run in an oil bath of minimum viscousness.

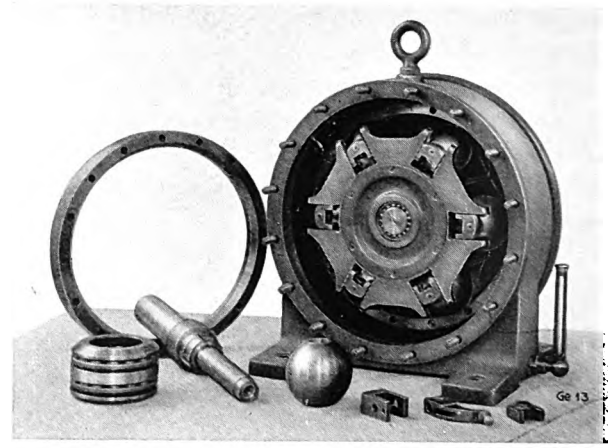

Fig. 4. Gear, type K, open

The experience thus far gained with the Escher Wyss gear is so excellent that quantity production has been taken up without hesitation.

We will now proceed to give a short description of the constructional details of the Escher Wyss gear.

Fig. 3 is a view of a gear, type K, for an output of from 15 to 20 HP, at a secondary torque of 545 ft. lbs., driving speed of 1500 r. p. m. and a speed variation range of from 200 to 0 r. p. m.

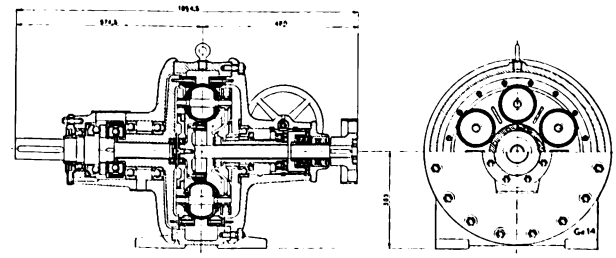

Fig. 5. Sectional elevation of a gear, type K.

Digitized by Google

Fig. 4 illustrates the same gear open. Fig. 5 is a sectional elevation of this type of gear.

Figs. 6, 7 and 8 are the corresponding illustrations of gear, type R, for an output of from 2 to 3 HP, at a secondary torque of 35 ft. lbs., driving speed 1500 r. p. m., range of speed variation between 1450 and 50 r. p. m. Also this gear may be regulated up to the standstill of the secondary shaft.

The efficiency diagrams are shown in Figs. 9 and 10. In spite of the comparatively small outputs, the efficiency values are very high. Such results cannot be obtained with gears of customary design, especially not with hydraulic gears. The test bed for small gears is shown in Fig. 11. The tests embrace the determination of the two speeds and the inherent torques under different service conditions.

The electrical data are also determined and serve as a check. The primary torque is measured with an Amsler torsion dynamometer, the secondary torque by means of the braking power acting on the spring balance, and the diameter of the brake drum.

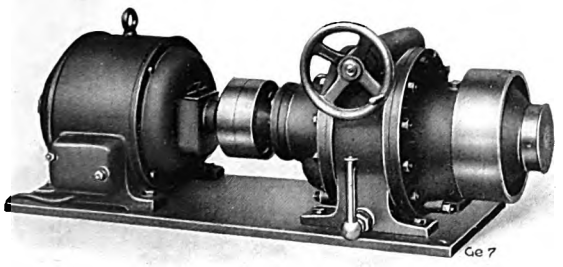

Fig. 6. Gear, type R.

All instruments are controlled before and after the tests. For continuous tests, the load is produced by d. c. generators switched on to resistances. Tests, which were made without interruption day and night during two months, irreproachably proved the dependability in service. A perceptible wear of the gears could not be ascertained after ever so long a period of service, some of the gears having up till now operated for 3000 hours and more.

Field of application.

The field of application is so vast that it is impossible to deal with it in detail here. We shall, therefore, restrict our remarks to some of the chief applications. The possibility of direct coupling of the motor with the work machine and of avoiding all intermediate transmissions; the absolute dependability in service paired with high efficiencies and

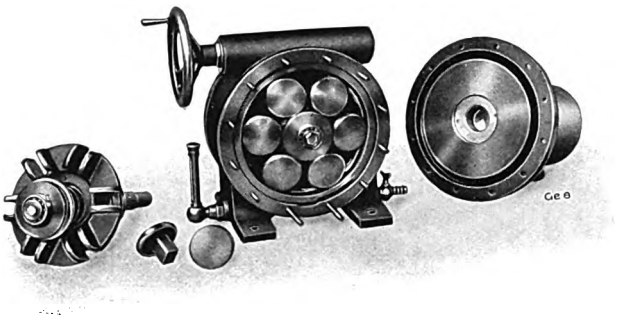

Fig. 7. Gear, type R, open.

accurate running, enable this gear to satisfy the most stringent requirements.

Textile industry.

Hardly any other industry is so dependent on variable speeds as this industry. Commencing with the spinning mill and proceeding to the dye works and printing works, all the numerous stuff refining processes require absolute adaptation of the working speed to the individual processes. The Escher Wyss gear is especially suitable for the drive of spinning machines owing to its wide range of speed regulation

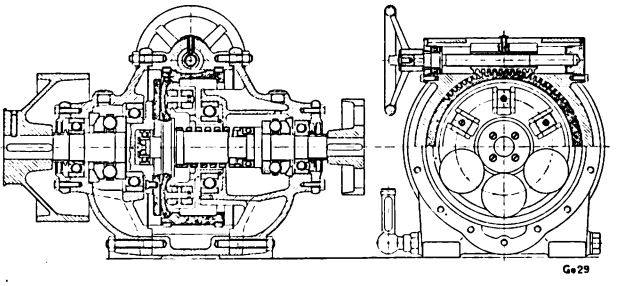

Fig. 8. Sectional elevation of a gear, type R.

and accurate running. These two properties will in a very short time conquer the whole field of the textile industry for the Escher Wyss gear.

Wire and cable works.

Wire drawing machines operate at different speeds according to the material and section of the wire. The appliances for galvanizing or hardening the wires are especially susceptible to the maintenance of the correct speed.

Machine tools.

The drive of machine tools is one of the oldest gear problems. The coupling of an Escher Wyss gear with a machine tool almost in every case offers

Digitized by Google

a more satisfactory solution than obtained with former constructions. Lathes, and more especially such for machining discs, are very suitable for this gear drive, likewise boring machines with which the

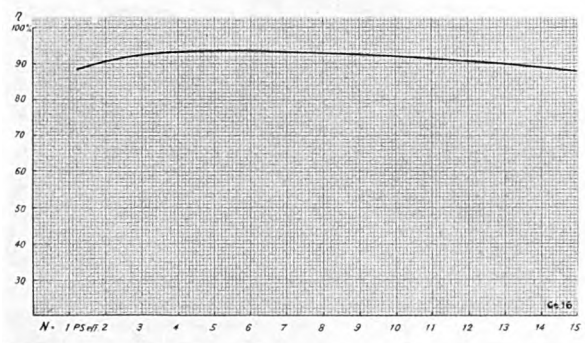

Fig. 9. Efficiency diagram of a gear, type K 12, at constant speed n_1 = 1500 r. p. m., n_2 = 150 r. p. m.

material and the diameter of the bore frequently changes. Saws and cutting-off lathes, especially in store rooms where different metals of varying strength have to be cut into smaller pieces. Grinding machines: amongst these, the drive of roll and cylinder grinding machines, which have to operate with constant peripheral speeds independently of the diameter and at varying machine speeds are of special interest. Our gears are also very important for older machine tools, which are still in good condition, but owing to the drive do not work economically.

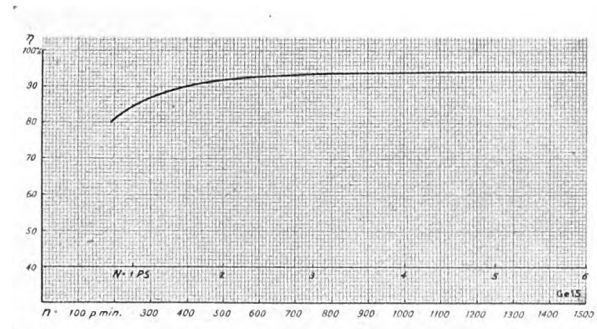

Fig. 10. Efficiency diagram of a gear, type R 7.5, at constant output of 3 HP, driving speed 1500 r. p. m. and constant speed at variable output.

Diverse works.

The chemical industry requires variable drives on a large scale for conveying plants.

With boiler or heating plants, the quantity of air required for combustion or drying is much better accomodated to the momentary needs by varying the speed of the fan than by any other mode of regulation. The drive of mechanical stokers by means of our gears likewise offers decided advantages.

Our gears render the drive conditions in printing works considerably more economical than is possible

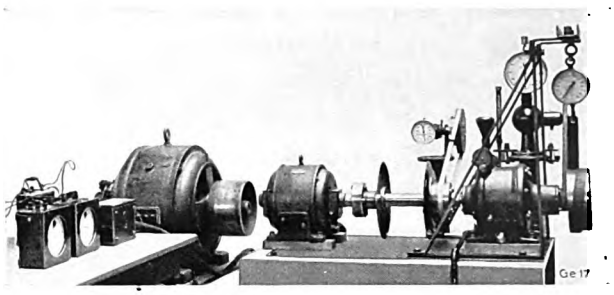

Fig. 11. Test bed for efficiency measurements.

with the present day variable speed motors.

The Escher Wyss gear will also be found suitable for the drive of compensating pumps, which are subject to considerable fluctuations of the head. Fig. 13 illustrates such a unit.

Paper mills.

General remarks. In paper mills and in the paper-working industry in general there is a large demand for variable speed gears. Messrs. Escher Wyss & Co. have elaborated a system for the drive of complete paper-making machines for which patents have been applied for. A description of this system will be given further on, our present remarks being restricted to the auxiliaries required for the manufacture of paper. Most of the these auxiliaries

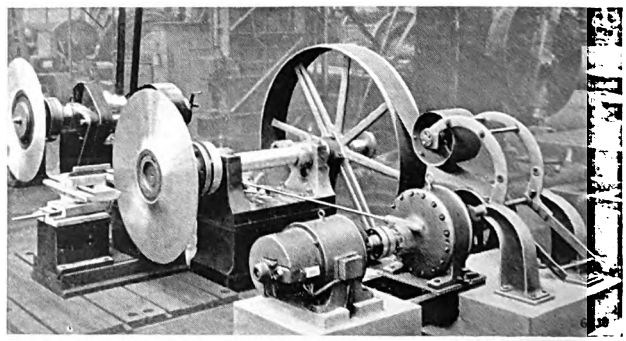

Fig. 12. Drive of a lathe for machining discs.

are inconceivable without adjustable speeds. Spray dampers, sizing machines, drying apparatus and colouring machines can only function satisfactorily and economically with carefully adjusted speeds. The Escher Wyss gear is also of outstanding importance for the drive of paper slitters and the machines for working the paper.

Digitized by Google

Fig. 14 depicts the drive of a rotary cross-cutter of the Dr. O. Strecker (Darmstadt) system, as supplied to a number of large paper mills.

Units as illustrated in Figs. 3 and 15 are employed for the drive of reeling and paper-cutting machines. The latter gear, type R 14, has an output of from 15 to 20 HP at a maximum secondary torque of 36 ft. lbs., driving speed of 1500 r. p. m. and a range of speed variation from 1450 to 50 r. p. m.

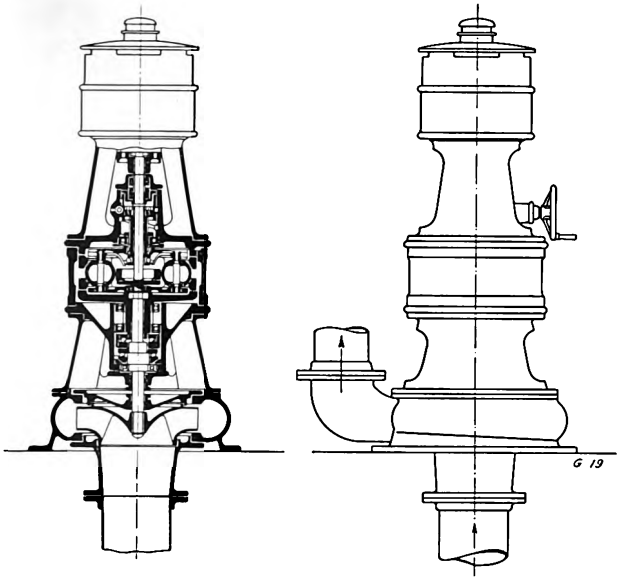

Fig. 13. Compensating pump for fluctuating service conditions.

The Escher Wyss gear is also well suited for the individual drive of the shaker.

The drive of the calender, requiring individual outputs of from 40 to 80 HP, is being studied by Messrs. Escher Wyss & Co. The wide range of speed regulation of the Escher Wyss gear allows of combining the feed and working speeds in one group.

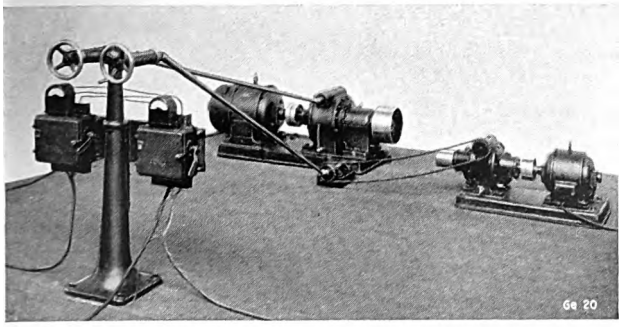

Fig. 14. Drive of a cross-cutter, Dr. Strecker system.

In cardboard mills and insulating tube works the Escher Wyss gear permits of exceptionally rational operation inasmuch as the winding speed may be adapted to suit the conditions, especially when manufacturing insulators.

The paper-making machine drive, Escher Wyss system.

The idea to split up the drive of paper machines and to drive the individual parts of the machine from separate sources of power is by no means new. The first proposition of the kind was put forth by Messrs. Brown Boveri & Co. in co-operation with the firm of Voith (Heidenheim), though attended with negative results. The fault lie in an efficient regulation of the individual driving motors. Harland solved the problem of regulation in an ideal manner. For his drive Harland employs variable speed d. c. motors. To avoid too large dimensions of these motors, Harland interposes a toothed wheel gear with fixed gear ratio between the motor and

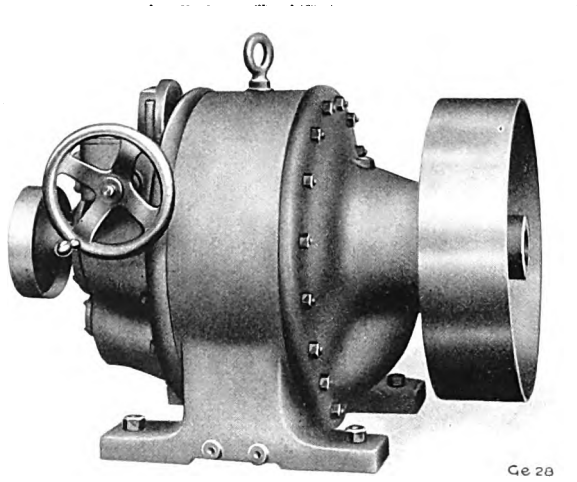

Fig. 15. Roller gear, type R 14.

roll. The Harland drive has been executed for large paper machines and is likely to monopolize this field. For medium-sized and small machines it is too expensive and, therefore, uneconomical. Similar solutions, however, electrically, were found by Messrs. Siemens-Schuckert Werke, Brown Boveri & Co., General Electric Co., Allgemeine Elektrizitäts-Gesellschaft, Bergmann Elektrizitätswerke Aktiengesellschaft. Apart from these, propositions for special hydraulic drives have been put forward (Ironside, Brown Boveri & Co.). Mechanical gears and drives over differential gears (Voith) are also mentioned in the patent literature. *)

*) Re history of paper machine drives, see Stiel 1924 „Elektrische Papiermaschinenantriebe". The same work contains very precise data concerning the requirements, which a modern paper machine drive must satisfy.

Digitized by Google

The paper machine drive according to the Escher Wyss system operates as explained hereunder:

In Fig. 16, let 1, 2, 3 be variable speed gears connected at one end with the motors 4, 5, 6 and at the other end with the paper machine rolls 7, 8, 9 by means of flexible clutches. Let group 1, 4, 7 be the so-called master group. Let 10 be a shaft running through the entire length of the paper machine and receiving its drive from the master group over the chain drive 11, shaft 12 and bevel wheels 13. This shaft might just as well be driven at constant speed from some extraneous source of power. The groups 2 and 3 are in regulating companionship with this shaft 10 via the differential gears 14 and 15. The chain drives 16 and 17 each drive a shaft 18 and 19 and these latter the one end of the differential gears mentioned (bevel wheel 20 in differential gear 15). The other end (bevel wheel 21 in gear 15) be driven from shaft 10 by means of the bevel wheels 22 and 23 via the clutches 24, 25, 26, and the auxiliary gears 27 and 28 by the shafts 29 and 30. The star-wheel (31 in gear 15) of the differential gear be connected with the regulating mechanism 35 and 36 of the corresponding gears by means of the chain drive 32 and 33. The regulating mechanism 34 of the master group may be operated by hand (handwheel 37) or by a motor 38 via the chain drive 39. The running of the paper machine may then be influenced from any point of the room. The remaining groups, when disconnected, may be tested as to their functioning by means of the handwheels 40 and 41. Nos. 42, 43 and 44 are safety clutches. Further let it be assumed that the motor of the master group be a synchronous motor, in the case under consideration combined with an exciter 45.

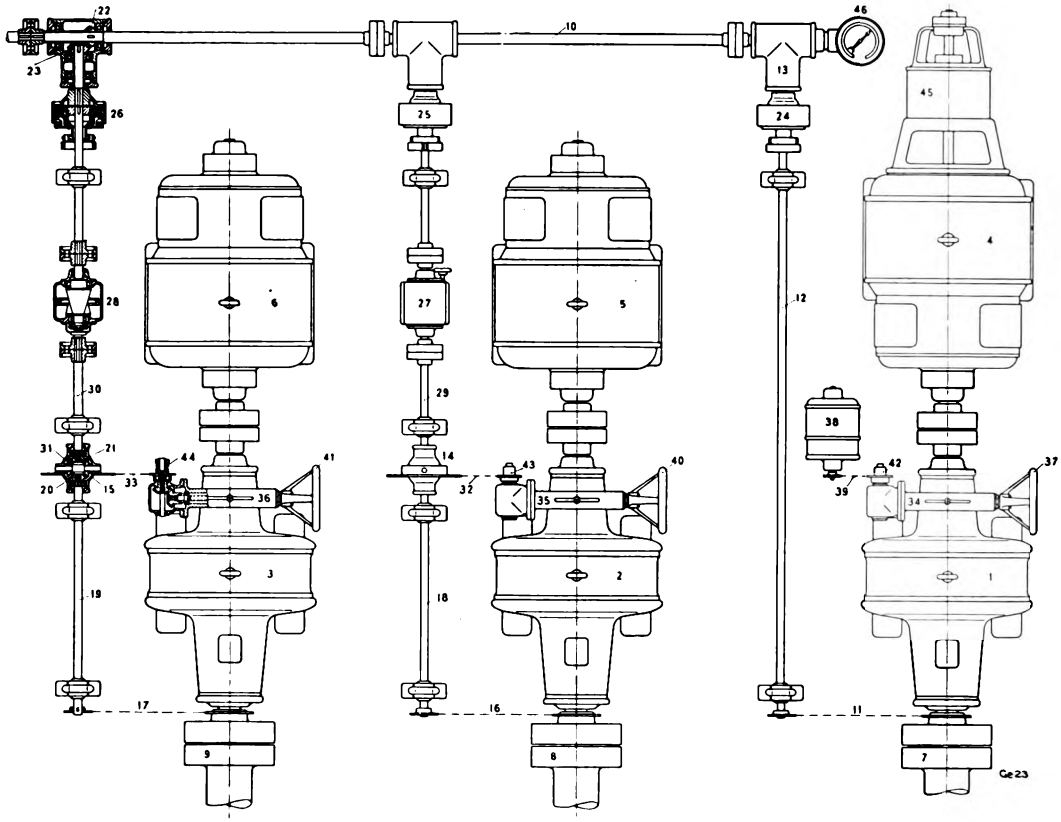

Fig. 16. Diagram of the Escher Wyss drive for paper-making machines.

The other motors are normal asynchronous motors, whose speed could be kept synchronous if the electrical conditions (voltage and power factor) rendered this necessary. 46 is a tachometer. In normal service the machine is operated as follows: Group 1 is switched in and the shaft 10 made to turn by throwing in the clutch 24. Then the single groups are successively switched in and their regulating mechanism connected with shaft 10 by means of the clutches 25 and 26. Each group thus started up is at once regulated to the required service speed. Now when the basic speed of the paper machine has to be altered, for instance owing to fluctuations of the density of the pulp or the like, only the gear ratio of the master group has to be

Digitized by Google

influenced (either by the handwheel 37, or motor 38). The master group should appropriately drive the drying part, as that part of the paper-making machine, which is started first and stopped last and always has a uniform power consumption. The regulating shaft 10 running at a higher or lower speed transmits the regulating impulse to all other gears. In the differential gears this impulse manifests itself

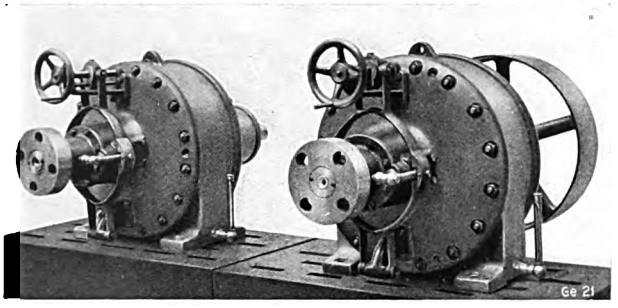

Fig. 16a. Gears, type K, for the individual drive of paper-making machines.

as a rotation of the star-wheel until the pertinent gear has acquired the new speed. The differential gears behave in the same manner when the gears or asynchronous motors alter their speed owing to fluctuations of the load. The necessary deviations betwen the individual groups due to the differences of length of the drying paper sheet (regulation of the tension) are effected by means of the auxiliary variable speed gears 27 and 28. Thus much concerning the principle of this drive. The economical

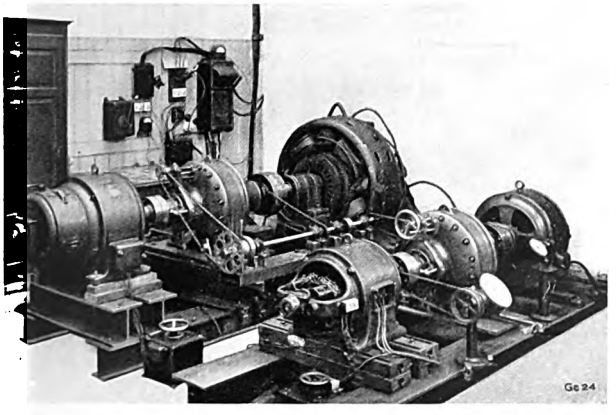

Fig. 17. Part of an EWC drive on the test bed.

aspect is also very instructive. Let it be assumed that the paper mill has a three-phase current supply or is connected to such a network. The following comparison refers to the ratio between the input three-phase current and the power given off at the roll clutch.

Efficiency of an E W C drive:

Normal three-phase motors and variable speed gears.

η_{total} = motor (85 %) × gear (90 %) = 76.5 %.

Efficiency of the usual drive:

Ward-Leonard set, variable speed motor and line shafting.

η_{total} = W-L set (90 × 90 = 81 %) × variable speed motor (90 %) × line shafting (80 %) = 58.3 %.

Efficiency of the Harland drive:

η_{total} = W-L set (90 × 90 = 81 %) × variable speed motor (85 %) × toothed wheel gear (95 %) = 65.5 %.

From this follows:

E W C drive	= 76.5 %,	power utilization	100 %
Usual drive	= 58.3 %,	»	76.2 %
Harland drive	= 65.5 %,	»	86.2 %

or in other words, the E W C drive compared with the usual drive saves 24 % of power, and compared with the electrical individual drive 14 %.

Messrs. Escher Wyss & Co.'s paper machine drive offers quite exceptional advantages especially for small and medium-sized plants. Patents have been applied for for the complete design and regulating mechanism.

Fig. 17 illustrates part of such a drive on the test bed. The group in the foreground is the so-called master group, the one in the background a group controlled by the former. The governing shaft with differential gear is seen lying in between the two groups and is connected with them by means of chain drives. The Escher Wyss drive is also important for the extension of existing plants, be it that the working speed is to be raised in order to increase the production, or that further presses and dryers are to be erected in order to alter the quality of the product. In many cases the existing Ward-Leonard sets no longer suffice to produce the increased output. By installing Escher Wyss gears driven by three-phase motors, which may be made to regulate in strict dependency on the other parts of the paper machine, this problem may be solved

Digitized by Google

in an irreproachable manner. A further advantage lies in the comparatively small capital outlay, which such a reconstruction necessitates.

Steam turbine drive of paper machines.

Messrs. Escher Wyss & Co. have also duly considered the conditions in small paper mills and more especially wood pulp mills. In such mills a rational power and heat economy is often of vital importance. Hitherto in some cases electrical energy was purchased and the steam raised in the boilers utilized via a pressure reducing valve for heating and cooking purposes. Very frequently also the variable steam engine with its complicated and uneconomical service was erected. A new drive, Fig. 18, introduced by Messrs. Escher Wyss & Co., eliminates these troubles. In the main this drive consists of a small back-pressure steam turbine and a two-stage toothed wheel gear, whose first stage drives the variable transmission via an Escher Wyss gear, type K, whilst the second stage drives the constant transmission. In many cases the drive of the beaters is combined with the latter. For small outputs, the turbine should appropriately be one-stage with back-pressure regulation, the accuracy of the regulation being controlled by a pendulum governor. The manufacture of such pendulum governors is specialized by Messrs. Escher Wyss & Co. In cases of mixed heating and cooking operation, where steam of two distinct pressures must be available, the turbine is designed with two stages and for intermediate bleeding of steam. The details of the turbine must be determined with due consideration of the heat and power consumption. The excess steam may be utilized for preheating. Low-pressure ejectors might also be fed with this steam instead of the suction pumps. The advantages of such a set

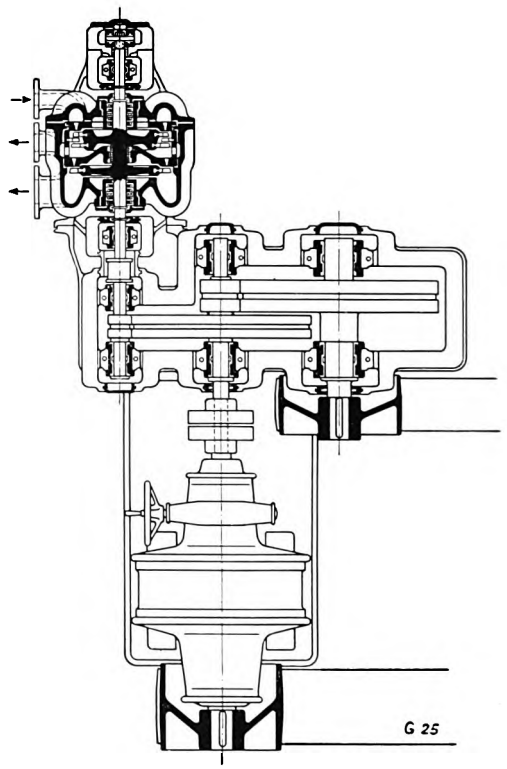

Fig. 18. Steam turbine drive for small paper-making machines.

are numerous. The Escher Wyss gear has a regulating range of 1 to 20 and more. Felt and paper may be inched at the lowest speed and the speed thereupon raised to the working speed. Tearing of the paper sheets through sudden acceleration is no longer to be feared.

Digitized by Google

The 710 lbs./sq. in. Zoelly bleeder turbine of the Arnau Paper Mill.

(Czechoslovakia).

By H. Bauer.

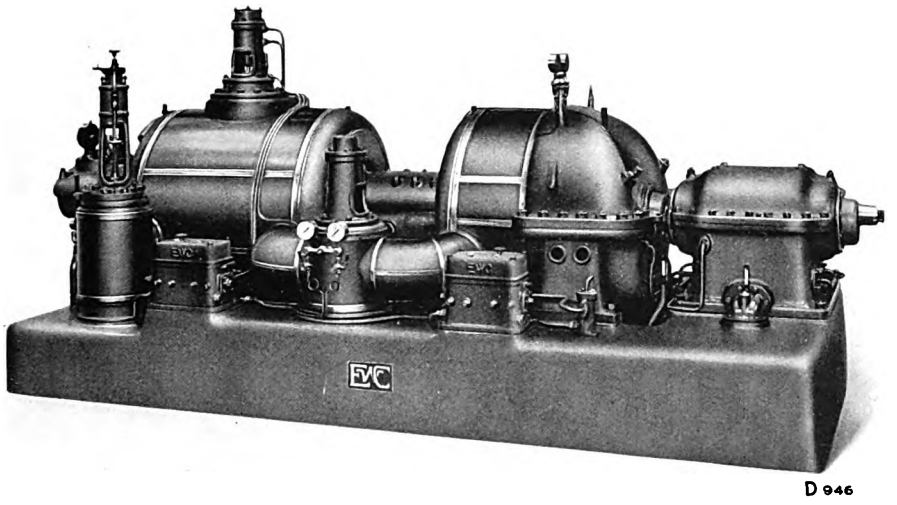

Fig. 1. View of the Arnau geared turbine.

Introduction.

The cellulose and paper industry at an early date recognized the importance of combining power and heat economy. In such works, varying quantities of steam and different heating temperatures are required for cooking, drying and bleaching purposes and it was, therefore, quite logical to generate the steam at a higher pressure and expand it in an engine performing work down to the pressure required in the heating pipeline. Few plants will be found nowadays in which the steam is separately utilized, i. e. in which the steam for heating purposes is raised in low-pressure boilers, whilst the steam for energy production is generated in separate boilers and utilized in separate machines.

The utilization of steam in this manner inevitably leads to the construction of back-pressure or bleeder turbines. It is universally acknowledged that the steam turbine, apart from its economy, offers several further advantages, such as minimum space requirement, simple handling, maximum reliability in service, oil-free exhaust steam and condensate, minimum oil consumption, simple and reliable regulation, which have been responsible for its exclusive use in numerous industries and especially in the cellulose and paper industry.

A back-pressure turbine should only be considered when the output obtainable from the required quantity of heating steam coincides with the power demand of the works. This is not usually the case in paper mills and, therefore, in these circumstances a bleeder turbine should be considered as prime mover. Frequently also different heating steam pressures are required and it might be thought desirable to equip the turbine with a corresponding number of tappings. However, to stipulate that several tappings are required giving varying automatically controlled steam quantities and steam pressures would result in a rather expensive and complicated turbine, the control of which would not be absolutely reliable, so that nowadays such special turbines are designed with a maximum number of two automatically controlled tappings.

With the increasing use of higher operating steam pressures and temperatures it has been possible to produce much more readily the total energy of a works from the quantity of heating steam required. For many years Messrs. Escher Wyss & Co. have given this question their special attention and they were the first turbine manufacturers to take up the design of steam turbines for pressures up to 2555 lbs./sq. in. and temperatures up to 840°

Digitized by Google

Fahr. The experience gained with these turbines induced the Arnau Paper Mills to give us about two years ago an order for a bleeder turbine designed for a pressure of 710 lbs./sq. in. and a temperature of 750° Fahr., with two automatically controlled steam tappings.

Before describing this turbine, we would briefly mention that two ways are open for improving the thermo-dynamic efficiency of such special turbines:

1. By increasing the number of stages or the mean diameter of the wheels, which results in considerably larger and heavier turbines involving excessively high costs.
2. By increasing the speed of the turbine with moderate number of stages and employing small mean wheel diameters.

Messrs. Escher Wyss & Co. decided to adopt the second method. In 1918 geared steam turbines were introduced, which opened up a considerable field for the application of the steam turbine and the excellent results obtained with these turbines indicated that it might be advisable also to design the Arnau bleeder turbine as a geared unit.

Description of the turbine.

The Arnau turbine is of the pure impulse design with a small number of stages, the rotating part of which consists of two sets of steel discs. The runner blades, made of a special material, are inserted in dovetailed slots along the periphery of these discs. Cast-iron diaphragms, into which the guide blades are accurately cast, subdivide the casings into a number of chambers in such a manner that each runner wheel rotates between two guide wheels.

Fig. 2 illustrates this arrangement diagrammatically. A designates the guide wheels and B the runner wheel with inserted blades. The main features and advantages of the impulse principle are:

A certain expansion of the steam takes place in the guide channel A and a steam velocity corresponding to the respective difference of pressure is produced. Part of the available pressure energy of the steam is thus converted into kinetic energy at the exit of the guide blade. This kinetic energy is transmitted to the wheel, or shaft, by means of the runner blade B. An expansion of the steam in the runner blade does not take place as in reaction turbines. The steam pressure at the entrance of the runner blade is exactly the same as at the exit of the runner blade and consequently a uniform pressure prevails in the runner wheel chamber, which permits large clearances being employed between the fixed and rotating blades and constitutes one of the main advantages of the impulse turbine. This constructional detail alone adds greatly to the reliability of the plant in service, and the

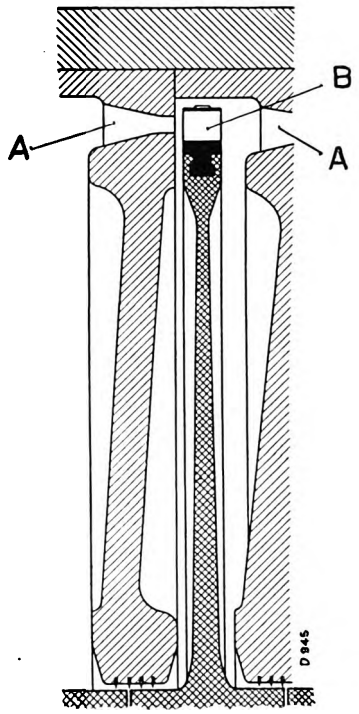

Fig. 2. Diagrammatic sketch of the guide wheels and runner wheels.

blade clearances of the Arnau turbine are at least 0.08″ to 0.12″ axially and 0.2″ radially.

The runner blades, shown in Fig. 3, are made of a 5 per cent nickel steel. The short blades are of uniform thickness, whilst the longer blades taper towards the top, the blades being milled from the solid. The guide wheels, illustrated in Fig. 4, are made of a special cast material and all guide blades are carefully cast in. The steam passages are machined with special machines and hand filed in order to reduce steam friction to a minimum.

The turbine, shown in Figs. 1 and 5, was designed for a normal pressure of 710 lbs./sq. in. and a temperature of 750° Fahr., the normal steam consumption being 28 600 lbs. per hour. Of this amount, 5500 lbs. per hour are bled at 128 lbs./sq. in. abs. pressure and 16 500 lbs. per hour at 43 lbs./sq. in. abs. pressure. The specified and guaranteed rating is 2520 HP, whilst it was also required that the two steam tappings should be automatically controlled. Under normal service conditions the turbine has to work as bleeder-back-pressure turbine, whilst the additional low-pressure part is only exceptionally used for increased power supply up to 3000 HP.

Digitized by Google

A further stipulation was that steam from waste heat boilers should be supplied to the first tapping.

The speed of the turbine is fixed at 7500 r. p. m. and reduced to 3000 r. p. m. by means of a reduction

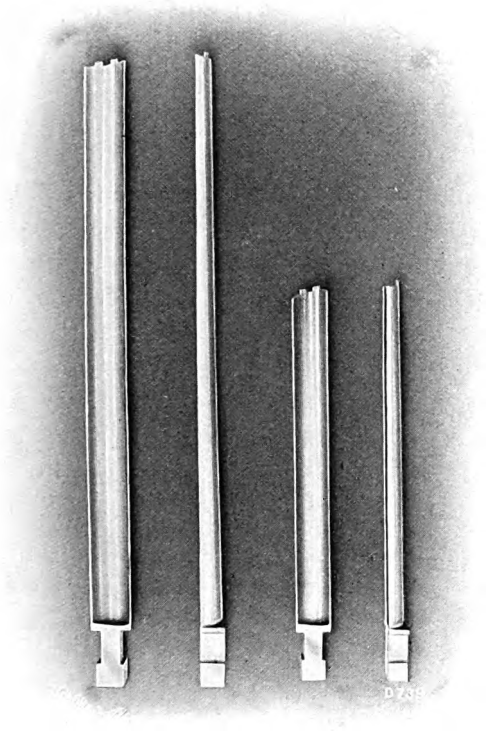

Fig. 3. Runner wheel blades.

gear. The three-phase generator was supplied by the A. E. G.

Our illustrations show the simple, compact design of the turbine together with the reduced number

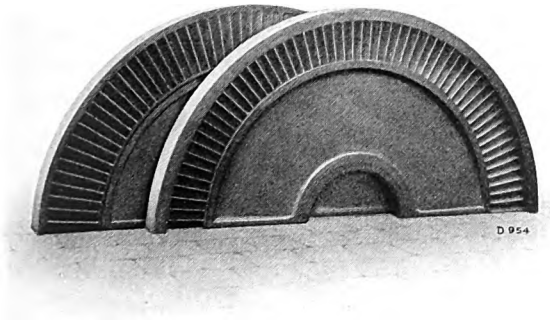

Fig. 4. Guide wheels with cast-in blades.

of stages within which the heat drop from 710 lbs./sq. in. to vacuum is utilized. The cast-steel high-pressure casing contains five impulse wheels the low-pressure casing three. With the small diameters involved and the robust construction of the runner wheel blades the stressing of the material of the rotary parts in spite of the high speed is quite within normal limits of 3000 r. p. m. turbines. It would be incorrect to assume that abnormal stresses are involved with the high speed, since these stresses are easily controlled by appropriately dimensioning the parts.

By subdividing the turbine into two casings, it is only necessary to provide the high-pressure casing with a bleeding chamber, since the second tapping is taken from the lateral connecting pipe between the two casings.

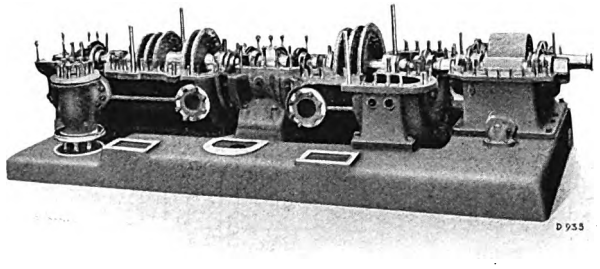

Fig. 5. Arnau geared turbine with upper part of casing removed.

The rotors, both of which are made from one forging, are short and very rigid ensuring perfectly steady running.

The speed governor, emergency governor, oil distributing valve and oil pump drive are built into the high-pressure bearing. The speed governor only controls the throttle valve, whilst the two Arca pressure regulators contained in the small boxes on the turbine bedplate influence the steam tappings.

The spur wheel gear, the teeth of which are hardened and ground by a special process, runs perfectly noiselessly and is subject to practically no wear.

Fig. 6 illustrates the regulating devices of the turbine and at the same time shows in how simple and perfect a manner the most difficult regulating problems are solved by Messrs. Escher Wyss & Co. The pressure in the bleeding branches I and II has to be kept constant independently of the required quantities of steam and the loads on the turbine. Branch III leads to the condenser.

The main stop valve N is influenced only by the normal speed governor and output regulator. Thus the speed governor dominates over the two pressure regulators. To a certain extent the output of the turbine is dependent on the quantity of steam bled,

Digitized by Google

If, for instance, much steam is to be bled from the branches I and II, then the electrical output of the set must be correspondingly large. If this is not so, and the quantity of steam corresponding to main stop valve N, which is not directly influenced by the two pressure regulators.

Two emergency governors are provided to prevent dangerous speeds being reached, one of which acts

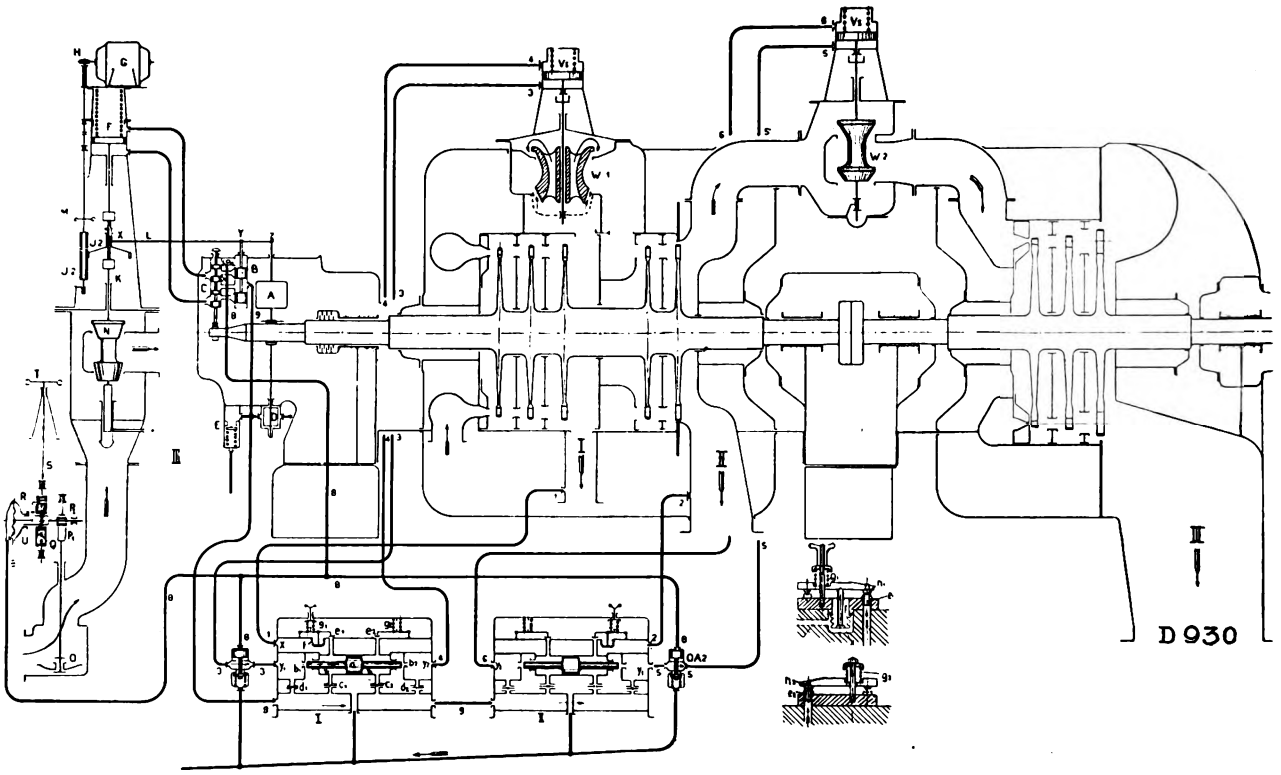

Fig. 6. Diagram of the bleeding-back-pressure control of the Arnau geared turbine.

the electrical output is smaller than the quantity of steam to be bled, the speed governor closes the stop valve N untill the quantity of live steam corresponds to the electrical output.

In this case the pressure in the bleeding branch drops below the desired value, and therefore, automatic pressure reducing valves must be provided in the bleeder piping. As soon as sufficient steam can no longer be bled from the turbine, and the pressure, drops below the normal value, these pressure reducing valves open and admit live steam.

Conversely, the turbine may work under load when both bleeding branches are closed.

The complete regulating mechanism is controlled by oil under pressure, the latter being supplied by the toothed wheel oil pump D. The relief valve E is provided to keep the oil pressure constant. The speed governor of this turbine is similar in every respect to that of a normal turbine and acts on the on the throttle valve N, and the other on the stop valve O.

1. When the load is suddenly thrown off the turbine, the two valves W_1 and W_2 must be closed, as otherwise steam would flow back through the two branches I and II and the turbine might race. The pressure regulators have the tendency to close the overflow valves W_1 and W_2 since the pressures in the bleeding branches drop as soon as the throttle valve is closed. However, in normal service these valves may only open and close very slowly as pressure variations usually also take place gradually. To ensure rapid closure when the load suddenly fails, the two oil discharge valves O_1 and O_2 are provided in the piping 3 and 5.

When normal speed is exceeded, these valves open and the oil under the pistons V_1 and V_2 is released. These oil discharge valves are controlled by the emergency governor C. As soon as the latter

Digitized by Google

trips, the oil under pressure can flow to the valves through pipe 8. The two small pistons are forced downwards and the oil discharge is thus liberated.

When the emergency governor C is reset, the oil behind the two small pistons is retained. To allow of the oil flowing off again, a hole 8 a is provided, which communicates with the oil discharge. In the tripped position, the hole 8 a is closed by the emergency valve so that no oil can be discharged.

2. The pressure of the stop valve is transmitted to the toothed wheel P_2 by means of the rack P_1 fixed on the valve spindle. A worm wheel Q is loosely seated on the piston spindle and a clutch is provided between the toothed wheel P_2 and the worm wheel Q. A worm S engages the worm wheel and the valve is opened and closed under normal conditions by means of the handwheel fixed on the worm spindle.

When the safety governor trips due to overspeed, the emergency valve leads oil under pressure to the diaphragm U through pipe 8. After a certain travel this diaphragm forces the pawl R out of the groove in the worm wheel Q and the clutch between the toothed piston and worm wheel is released.

The valve spindle having a diameter of approx. 1.4″ acts like a piston pushed into the steam chamber from outwards. The steam has, therefore, the tendency to force the spindle out with a very powerful thrust, for instance for a spindle diameter of 1.4″, i. e. approx. 2 sq. in. cross-section and 710 lbs./sq. in. steam pressure, with $2 \times 710 =$ 1420 lbs. pressure. This power is used to close the valve whereby the toothed wheel P_2 including the spindle and clutch turns, whilst the worm wheel itself remains stationary. When the toothed wheel P_2 is coupled with the worm wheel, the steam cannot close the valve, since the worm gear is self locking.

To reopen the valve, the handwheel is turned in the direction in which the valve is normally closed until the clutch between the toothed wheel and worm wheel is engaged, whereupon the valve may again be normally opened. Oil under pressure behind the diaphragm U is also released through the bore 8 a as soon as the emergency valve is reset.

The quantity of oil required for the control of the emergency governors is very small so that they act almost instantaneously.

A study of Fig. 6 will render the performances described above perfectly clear. In addition we would refer readers to the description of a similar regulating apparatus, which was published in the «Escher Wyss News» No. 3 on page 91. In conclusion it may be stated the turbine was delivered about a year ago and has given every satisfaction, so that the problem of employing high pressures for special turbines may be considered as solved. This may partially be attributed to the experience gained with the 1420 and 2555 lbs./sq. in. turbines built by Messrs. Escher Wyss & Co.

The excellent steam consumption of the above-described bleeder turbine is shown in the following table:

Operating steam pressure 710 lbs./sq. in., steam temperature 750° Fahr., cooling water temperature 60° Fahr.

Steam quantity	34 100	28 600	26 400	25 300	22 000 lbs./hr.
1st bleeding at 128 lbs./sq. in. abs. . .	7 700	5 500	9 900	5 500	5 500 »
2nd bleeding at 43 lbs./sq. in. abs. . .	18 700	16 500	16 500	16 500	16 500 »
To condenser	7 700	6 600	– –	3 300	– – »
Output secured	2 000	1 640	1 050	1 220	840 »

Digitized by Google

The electric steam generating plant in the Padalarang Paper Mill.

By E. Walder.

With the ever-increasing development of the water power resources in the countries concerned, corresponding quantities of surplus energy become available, either because the new power stations cannot fully utilize their total output for some time to come, or because energy is only required at certain times of the day or year. Within recent years waste energy has been increasingly utilized for heating purposes in a number of industries, especially for raising steam. Works with continuous service and requiring much heat are best suited for the purpose, for instance paper mills, chemical works, hospitals, etc. all of which can utilize electrically produced heat directly without storage. According to the service conditions it may eventually be found necessary to provide small compensating accumulators.

Close by the Padalarang Paper Mill (Java) there is a State-owned power station, whose output is utilized only during the main lighting period, i. e. from 6 to 9 p. m. During the remainder of the day and for the greater part of the year 500 to 3000 KW are available, which are utilized in the paper mill for steam production.

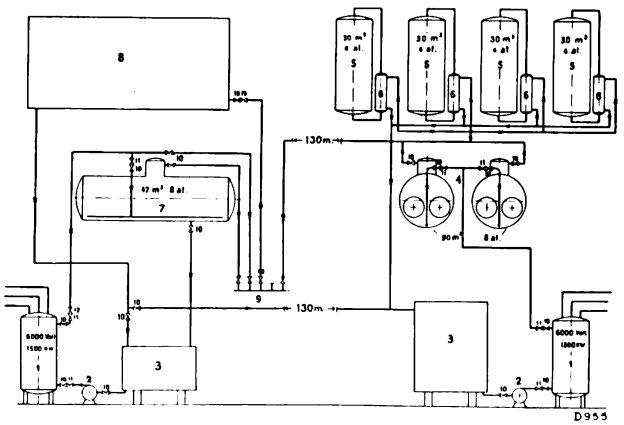

Fig. 1. Diagram of the steam boiler plants in the Padalarang Paper Mill.

1 = Electrode boiler
2 = Feed pumps
3 = Feed water reservoir
4 = Lancashire boilers
5 = Straw digester
6 = Lye preheater
7 = Steam accumulator
8 = Paper machine

Steam is chiefly required for the digester plant, 880 to 4400 lbs. per hour at 85 lbs./sq. in. pressure, and for the paper-making machine, 880 to 3950 lbs. per hour at 36 lbs./sq. in. pressure. The existing oil-fired boiler plant consists of 2 Lancashire boilers, each of 965 sq. ft. heating surface and 115 lbs./sq. in. operating pressure. The two principal places of consumption lie 430 ft. apart so that it was decided to erect two plants in order to avoid as far as possible radiation losses in the piping. The one plant is erected in the existing boiler house near the digester plant, the other closely adjacent to the paper machine. Both plants are interconnected by means of the existing steam pipe. The lay-out is shown in the diagram, Fig. 1.

1. The plant in the boiler house, Fig. 2.

The very spacious boiler house allowed the electric steam generating plant being installed without difficulty. The steam produced in the electrode boiler is admitted to the lowest point of the water chamber in the two Lancashire boilers and

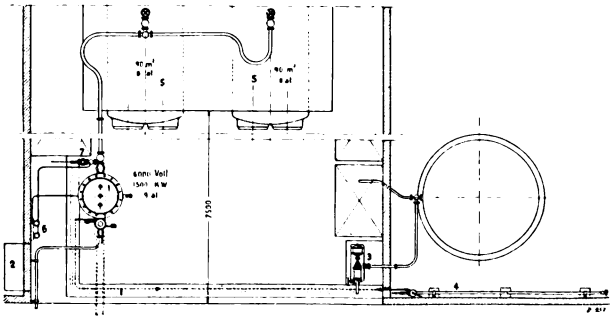

Fig. 2. Electrode boiler plant in boiler house.

1 = Electrode boiler
2 = Switchboard
3 = Feed pump
4 = Counterflow apparatus
5 = Lancashire boilers
6 = Arca electric pressure relay
7 = Arca regulating valve

it is thence conducted through the existing piping to the points where it is utilized. This arrangement allows the two Lancashire boilers being used as heat accumulators to compensate the considerable fluctuations in the steam consumption of the digester plant. At the same time the boilers are always

Digitized by Google

under pressure and may, therefore, in case of a breakdown of the electric plant, for instance failure of the supply, be brought into action within a few minutes, equivalent to the time required for starting up the oil burners, and they will then take over the supply of steam.

At least one of the boilers has to be put into service every evening between 6 and 9 p. m. when no energy is available. This daily service of 3 hours with oil firing prevents the complete cooling down of the masonry and the heat losses of the two Lancashire boilers when serving as accumulators are, therefore, very small.

2. The plant near the paper-making machine, Fig. 3.

Contrary to the digester plant, the steam consumption of the paper machine for a certain quality of paper is constant. At exceptional periods, for instance when the paper sheet tears, short interruptions occur, but on no account may the steam supply fail. To avoid this with the electric boiler plant (failure of electrical supply), a separate accumulator boiler was erected. This boiler during short stoppages of the paper machine receives the excess steam and is capable of giving off 5500 lbs. of steam at 114 to 36 lbs./sq. in. pressure over a period of 1½ hours, i. e. the paper machine may be fed by the accumulator alone during 1½ hours at maximum steam consumption. This interval of time suffices to repair a breakdown or to start up the spare boilers.

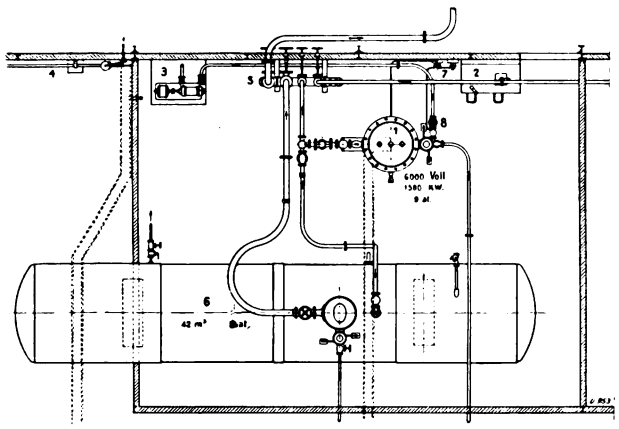

Fig. 3. Electrode boiler plant near the paper machine.

1 = Electrode boiler
2 = Switchboard
3 = Feed pump
4 = Counterflow feed heater
5 = Steam distributor
6 = Accumulator boiler
7 = Arca electric pressure relay
8 = Arca regulating valve

The electrode and accumulator boilers are erected in a separate room in the immediate vicinity of the paper machine. The steam raised by the electrode boiler is conducted to the water chamber of the accumulator, is extracted at the dome, and is then led to a steam distributor, which connects the electrode boiler and the existing Lancashire boilers to the paper machine. The valves of the steam distributor are controlled from the paper machine room, in which also the gauges for the two boilers are fixed. The operators at the paper machine are, therefore, in a position to control the steam plant without trouble.

The condensate received from the drying part of the paper machine is led either into the feed water reservoir near the electrode boiler, or to the existing reservoir near the boiler house according to whether the electrode boiler or the Lancashire boilers are in operation.

3. The electrode boilers, Fig. 4.

Since the digester plant and the paper machine have the same maximum steam consumption, it was possible to provide two boilers of equal size, which is very advantageous as regards spare parts. The distribution of the total output over two units also permits comparatively small outputs being secured with relatively good efficiency.

The boilers of our design are equipped with stationary electrodes, fixed to the removable cover. The conductors through the cover are worthy of special notice. They have no stuffing boxes and automatically seal themselves by reason of the internal pressure. Breakdowns are quite out of the question with this design.

With electrode boilers the water to be evaporated serves as the heating resistance. This principle has been further developed in our boiler system to vary the output of the boiler by altering the depth of immersion of the electrodes. Insulating bodies are provided in between the electrodes in order to regulate the path of the current when operating with a voltage of 6000 volts. The insulating bodies are so designed that the steam bubbles may rise by the shortest path without baffling.

A safety device prevents the live electrodes protruding above the water level, which at 6000 volts tension would give rise to arcing. The main circuit breaker is operated by means of a contact in the circuit of the no-voltage coil, as soon as the water

Digitized by Google

level in the boiler drops below a certain level. The pump is automatically switched off when the main circuit breaker is cut out or in the event of the water level becoming too high.

In operation the water in the boiler becomes saturated with the salts contained in the feed water. This concentration may, however, not exceed a certain limit, as otherwise the conductivity would be considerably increased. A blow-down device permits the concentration and consequently also the conductivity being regulated within wide limits. The heat of the blow-down water is absorbed by the cold make-up water in a counter-current feed heater.

Both boilers are equipped with a combined Arca electric pressure regulator, which on the one hand adjusts the boiler output to the steam consumption

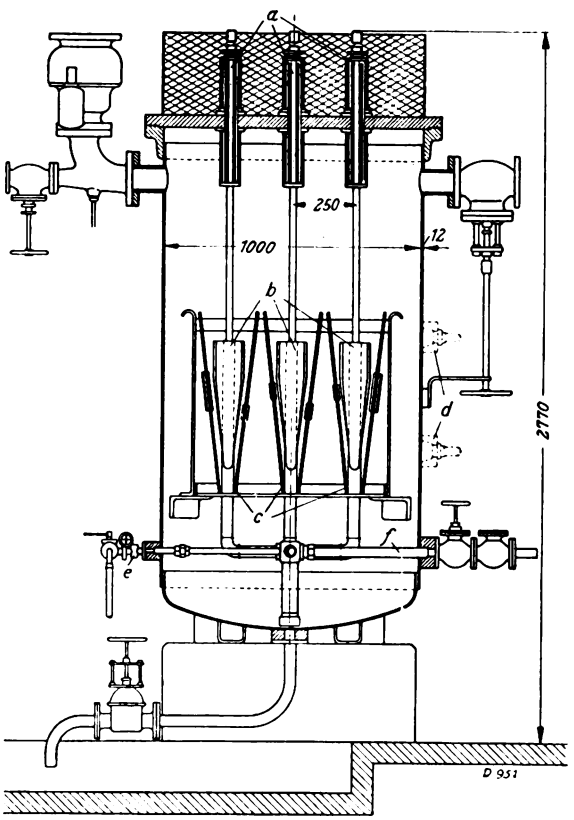

Fig. 4. Section through the electrode boiler.
a) Conductors; b) Electrodes; c) Insulating bodies; d) Water contacts; e) Blow-down device; f) Feed pipe.

and on the other limits the output to the range of from 350 to 1500 KW. The maximum limit of output is adjusted to the energy available from the Electricity Works. The pressure relay receives its impulse directly from the boiler and prevents the rising or falling of the boiler pressure by a corresponding diminution or increase of the output. The output can be increased only to the maximum limit set by the electric relay, which relay is energized by a current transformer in the supply circuit. Both relays act on a regulating valve in the feed piping, influencing in the required direction the water supply and thereby also the output.

The supervision of the boiler is exceedingly simple, and may be performed incidentally by the personnel required for other jobs, being confined to a brief inspection every 1 to 2 hours according to the service conditions.

The boilers are each fed by a high-pressure centrifugal pump direct-coupled to an electric motor. Contrary to coal-fired boilers, water shortage does not endanger the electrode boiler and, therefore, one single feed device and one water level indicator suffices.

The electric switching apparatus comprises a three-pole oil circuit breaker, 3 ammeters, 1 voltmeter with the requisite current and voltage transformers, and 1 push-button switch for the remote control of the oil circuit breaker.

4. Accumulator boilers.

As mentioned above, the two Lancashire boilers serve as buffers to compensate the fluctuations of the steam consumption in the digester plant, whilst, for reasons of safety in service, a separate accumulator was erected near the paper machine. In both cases, the steam produced by the electrode boiler is led by a distributing pipe to the lowest point of the water chamber of the boilers. The escaping steam condenses and gives off its heat to the water. This arrangement ensures an efficient circulation of the water and the required uniform heating of same. The steam is extracted at the dome. Part of the heat supplied is lost by radiation and this gives rise to an excess of water in the accumulator, which is discharged at intervals into the feed water reservoir and is recovered in this manner. With the Lancashire boiler, serving as buffer during the day, the excess water is evaporated during the three service hours of the evening.

It is necessary for the accumulator near the paper machine being specially insulated against radiation losses. This is effected by a lining consisting of a layer of diatomite bricks and a layer of cork

Digitized by Google

Results of the acceptance tests.

Test No.	Charging 1	Buffer service 2
Duration of test with electrode boiler	2 h 50′	5 h 20′
Ditto with accumulator, discharging same	9 h 40′	—
Interval between charging and discharging the accumulator	0 h 20′	—
Total duration of test	12 h 50′	—
Mean outdoor temp. °Fahr.	46	48
„ boiler house temp. „	79	90
„ temp. over accumul. „	95	—
„ temp. on surface of accumulator „	109	—
„ temp. at steam meter „	97	—
Electrode boiler.		
Current consumpt., mean value of meter readings kW-hr	2450	6129
Equivalent heat B.T.U.	8 365 000	20 927 000
Current consumption whilst charging kW-hr	865	—
Ditto with buffer serv. „	—	1151
Equivalent heat transfer to the electrode boiler B.T.U.	2 962 000	3 925 000
Mean steam pressure in electrode boiler lbs/sq. in.	174.7	162
Mean temperature of feed water before entering electrode boiler °Fahr.	153	147
Mean heat content of steam produced B.T.U./lb.	1195.2	1195.2
Heat supplied to boiler „	1074.2	1080.2
Quantity of feed water lbs.	9315	22370
Quantity of blow-down water „	2059	3142
Quant. of water evaporated „	7256	19 228
Ditto, referred to water of 32° F. and steam of 212° F. lbs.	6765	18 010
Ditto lbs/hr.	2390	3380
Ditto for 1 sq. ft. of evaporating surface lbs/hr.	285	402
Steam production per 1 kW-hour lbs.	2.96	3.16
Ditto for water of 32° F. and steam of 212° F. lbs.	2.76	2.94
Quant. of make-up water „	1755	3419
Temp. of make-up water before heat exchanger °F.	54	55
Ditto beyond heat exchang. „	181	165
Differ. between temp. of make-up water and feed water °F.	28	18

Test No.	Charging 1	Buffer service 2
Temp. of blow-down water at outlet of electrode boiler °F.	212	208
Ditto beyond the heat exchanger „	75	68

Heat balance.	B. T. U.	%	B. T. U.	%
Input of electric current in electrode boiler	8 365 000	100	20 927 000	100
Transformed into steam	7 794 000	93.4	20 800 000	99.4
Recovered in heat exchanger	50 200	0.6	58 900	0.3
Total heat utilized in electrode boiler	7 844 200	94.0	20 858 900	99.7

Accumulator boiler, steam metering.	
Pressure in accumulator at beginning of charging lbs/sq. in.	30
Ditto at finish of charging „	166
Ditto at beginning of discharge „	159
Ditto at end of discharge „	30
Duration of steam metering	9 h 40′
Pressure before measuring nozzle p_i lbs/sq. in. abs.	34.1
Ditto beyond measuring nozzle p_a „	32
Nozzle section at steam temperature sq. in.	0.76
Pressure ratio $p_a : p_i$	0.938
Discharge index ψ	10.18
Specific volume of steam v_i cub. ft./lb.	11.2
Steam quantity lbs/hr	735
„ „ lbs.	7100
Heat content of discharged steam B.T.U./lb.	1168.2
Ditto of feed water „	120.6
Useful heat of discharged steam „	1047.6

Heat balance of complete plant.	B. T. U.	%
Transformed into steam	7 450 000	89.1
Recovered in exchanger	50 200	0.6
Efficiency of complete plant	7 500 200	89.7
Losses	864 800	10.3
Heat supplied by electric current	8 365 000	100

segments. Both layers are prepared with a mass of infusorial silica, pointed and wrapped with cotton cloth and finally coated with a light oil point. The steam pipes and valves are also carefully insulated.

Generally Lancashire boilers are not very suitable for use as accumulators since their water

Digitized by Google

content is small compared with their surface. In the case under consideration, however, where at least one of the boilers is operated daily for several hours and the surrounding masonry is thereby heated, the heat losses are negligible.

5. Test results.

As the electrode boiler installations at Padalarang are in course of erection, no test results of this plant are available. However, the Schweiz. Verein von Dampfkesselbesitzern (Association of Swiss Boiler Owners) undertook very elaborate tests with a similar plant erected in the Women's Hospital in Basle (6400 volts, 1200 KW accumulator boiler, 342 sq. ft. surface, 170 lbs./sq. in. pressure). Messrs. Escher Wyss & Co. had guaranteed an efficiency of 96 per cent for the electrode boiler and accumulator if the accumulator were uniformly charged in 3 hours from 28 to 170 lbs./sq. in. and subsequently discharged in 10 hours from 170 to 28 lbs./sq. in. The steam extracted from the accumulator boiler was determined by a rounded nozzle and a mercury differential gauge, employing the Bendermann's formula. The test results compiled in the following table show that the guarantee figures were not only reached but at times considerably surpassed.

6. Costs of electric steam generation.

With 1 KW-hour approx. 2.9 lbs. of steam may be generated, and with 1 lb. of coal about 3.2 to 4 lbs. Omitting the charges for interest on capital, sinking fund, maintenance and attendance, we arrive at the following equivalents according to Rutgers (Bulletin des Schweiz. Elektrotechn. Vereins, 1924, No. 8):

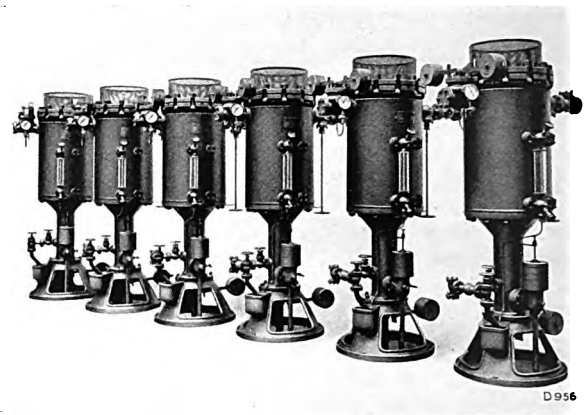

Fig. 5. Electrode steam generators, Revel system. 200 to 6000 volts, 200 to 600 KW output.

If the costs for interest, sinking fund, upkeep and attendance are taken into account, then according to Rutgers we have the following values for 2 definite examples:

1. Existing steam boiler plant of 1498 sq. ft. heating surface operating on day service, compared with electric boiler plant of 2500 KW capacity, which latter has to be purchased.

Running expenses index 2.32 i. e. 1 KW-hour may cost the 2.32 part of 1 lb. of coal.

2. Existing steam boiler plant of 4280 sq. ft. heating surface operating day and night, compared with a new electric electrode boiler plant of 8000 KW capacity.

Running costs index 2.62.

The factors influencing the running expenses vary from case to case, so that each scheme must be separately investigated as to its merits.

From the above remarks it is evident that, barring some few special cases, only surplus energy enters

Industrial heat utilization, for instance heating of rolls, drying plants, finishing works, distilling plants, etc.	approx.	0.5 to 2.3	KW-hr./lb.	of coal
Small steam boiler, day service	»	1.4 » 2.3	»	»
Medium-sized steam boiler, day service	»	2.3 » 2.5	»	»
Medium-sized steam boiler, day service with accumulator operation with energy at night for winter heating	»	2.6	»	»
Large steam boiler plant for day and night service	»	2.64 to 2.8	»	»
Large steam boiler plant for simultaneous coal firing and electric steam generation	»	3.0	»	»
Special cases:				
Direct electric heating compared with large boiler plant on 24 hours' service	»	2.0 to 2.5	»	»
Small steam boiler plant operated 3 days a week	»	1.7	»	»
Small steam consumption with large boiler compared with direct electric heating, day service	»	0.5 to 1.4	»	»

Remark: The indication 0.5 to 2.3 etc., does not imply that the value lies between 0.5 and 2.3, but that values of 0.5 and of 5 have already been observed.

Digitized by Google

the question of steam generation, the production of which entails practically no expense and which may, therefore, be sold without consideration of the production costs. Works requiring low-pressure steam may in this manner utilize very considerable quantities of energy. The economic aspect should, however, not be overlooked, namely the importance of saving considerable quantities of fuel. In the interest of the electric supply authority and also of the consumer the price of the current should be fixed with a definite ratio to the market price of the coal. Most current supply agreements for large works and that of the above paper mill are settled on this basis.

For various reasons such agreements are kept secret and, therefore, it is impossible to furnish data regarding the price for current paid by the Padalarang Paper Mill.

If in many instances it is a paying proposition to purchase electric energy for steam production from an external source, then it is undoubtedly of greater importance when waste energy from one's own water power plant is concerned. A Swiss paper mill absorbs in this manner the surplus output from its own water power plant of approx. 900 KW capacity, which operates under greatly fluctuating water volumes. Annually about 5 million KW-hours are generated and ½ million of this energy is utilized in an electric steam boiler. The saving in coal amounts to approx. 80 tons.

Another paper mill has purchased 800 KW annually for 24 hours per day for a lump sum. Temporarily the 800 KW are utilized only to the extent of 50 per cent. An electric steam boiler permits the complete utilization of the available current inasmuch as it absorbs the excess quantity by means of a regulator and thus keeps the load constant. Also, since the electric steam boiler may be taken off load in the shortest possible time, exceeding the maximum demand limit, which, if of long duration, would entail an increase in charges, is practically out of the question.

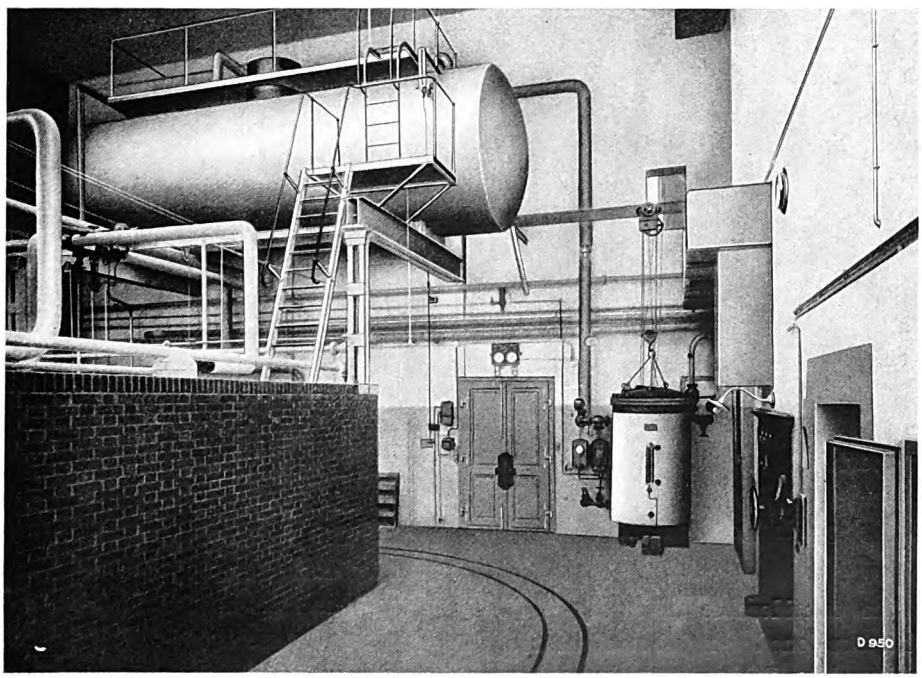

Fig. 6. Electric steam raising and accumulator plant in the Women's Hospital in Basle
Three-phase current 6400 volts, 1200 KW capacity.

Digitized by Google

Apparatus for concentrating waste sulphite liquor.

By Robert Peter.

Within recent years the utilization of sulphite liquor has made considerable progress. For instance, a wide application has been found in the use of sulphite liquor for the maintenance of roads. This liquor has the property of binding the surface material of the road and thus of rendering it practically dustless. In many districts around cellulose works, sprinkling the streets with liquor to combat the dust nuisance has become general practice in spite of the fact that the rain dissolves the liquor more or less and washes it away. The advantages and convenience offered by a road sprinkled with sulphite liquor are so considerable that they offset the disadvantage mentioned. In the immediate neighbourhood of the works the liquor is employed in the concentration in which it is obtained from the digesting process but it is further concentrated for the more distant places owing to the freight costs. This application of the liquor is steadily increasing, especially as attempts to render it less soluble by addition of certain ingredients have met with considerable success.

Also a process, which will enable a fuel to be economically produced from sulphite liquor, is being studied. The realization of this problem will, however, still require much time and work. In order to increase the economy, most inventors combine the production of fuel with the recovery of chemical substances from the liquor. According to an interesting Swedish process, the liquor, after substances have been recovered from it, is thickened and then worked up to a high-grade fuel by addition of wood refuse.

Apart from the considerable utilization in this direction may be mentioned a number of uses of a secondary nature, such as the use of thickened liquor with addition of other substances in foundries, briquette mills, tannin works, and for the production of absorption coal, etc.

Most of these applications require a thickening of the liquor. In many cases the correct manner of thickening the liquor is of vital importance for the economic utilization of the process involved, and indeed the concentration of sulphite liquor is one of the most difficult tasks of concentration technics. Three phenomena chiefly render the concentration a difficult matter: Firstly, the violent formation of foam; secondly, the escape of volatile substances resulting in a coating of the surfaces at the condensing end; and thirdly the strong tendency of the liquor to form rapidly growing and hard scale.

The following describes an evaporating apparatus in which the constructional design employed overcomes all these difficulties, and the evaporator is suitable for continuous service.

Fig. 1 is a sectional elevation of the apparatus, whilst Fig. 2 illustrates one of the types already in service.

The evaporator consists of an outer vessel equipped with the customary fittings, such as inspection holes, gauge glasses, test cock, pressure gauges, etc. The design of the heating system should be specially noted. It is composed of a number of concentric rings, each consisting of two cylindrical sheet metal jackets with reinforcing rings welded on at the top and bottom, heating steam being admitted to these annular rings. Fig. 3 shows one set of 7 rings with a heating surface of approx. 1285 sq. ft. The circulation of the boiling solution in the evaporator with ring system is very intensive owing to the large passages, and the boiling conditions are, therefore, very favourable. The walls of the rings are thick and consequently ensure a long life. Local corrosion of the walls resulting in the formation of holes, which occurs so frequently with tubular evaporators giving rise to breakdowns, has not occurred in the numerous installations we have supplied.

The use of heating rings offers another advantage of outstanding importance. All connections for the live steam, condensate and deaeration are fixed at the bottom and hence the cylindrical surfaces may

Digitized by Google

be mechanically cleaned by means of an appliance situated above the rings and operating in between them. After many years of careful investigation this applince has been adapted to satisfy practical

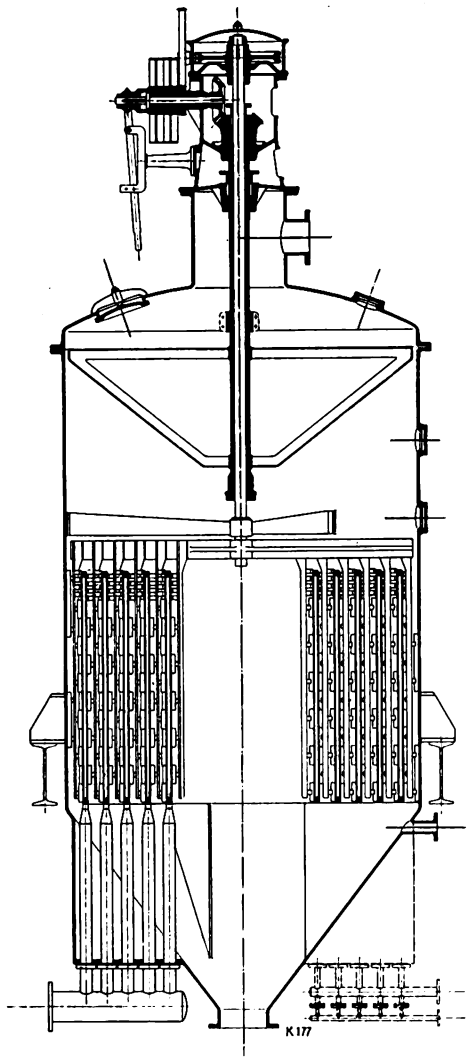

Fig. 1. Sectional elevation of an evaporator with ring-shaped heating units, scrubber and beater.

operating conditions, special care having being taken in the selection of the material used for its construction. Fig. 4 illustrates this scrubber. The shaft A situated in the centre of the apparatus and driven from an external source of power carries the cross arm C lying horizontally over the heating rings B. To the cross arm are fixed the rods D equipped with the scraping elements. The latter consist of a flat spring F with socket and a metal wire brush E. The contrivance is of heavy and robust design.

The scrubber allows the heating surfaces to be kept permanently bright. The wear of the rings is small and that of the scrapers so minute that a renewal of the metal wire brushes is necessary only after several thousand hours of service. This fact will be readily understood when considering that the scrapers operate at a very low speed and the pressure of the brushes on the rings is very weak. The duty of the scrapers is not to break away any

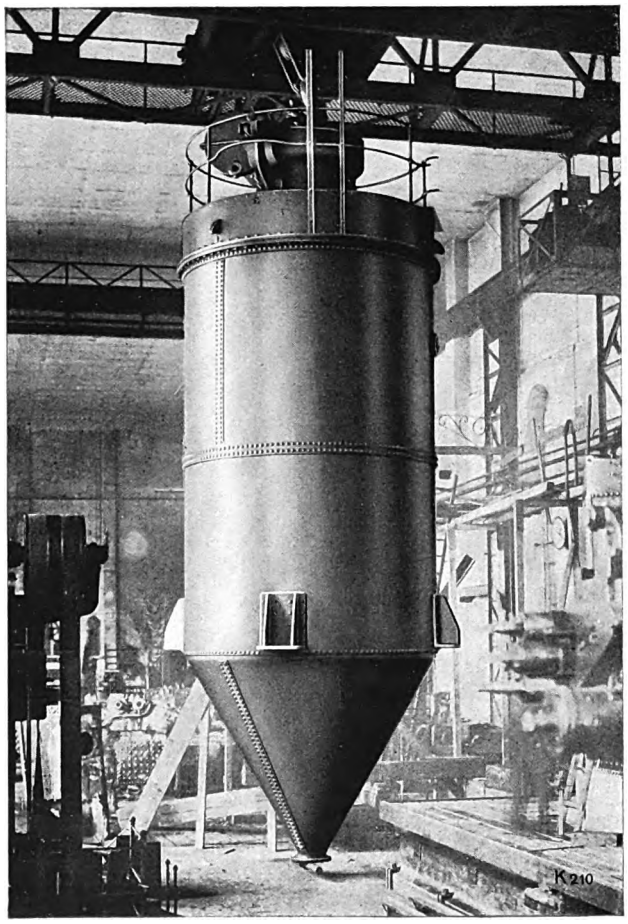

Fig. 2. View of an evaporator already in service with ring-shaped heating units and scrubber.

incrustations but simply to brush away the first minute traces of deposits.

Another characteristic item of the apparatus is the rotary beater arranged over the heating rings to combat the formation of foam. As may be inferred from Fig. 1, the beater consists of a simple, basket-shaped iron structure, which is driven simultaneously with the scrubber by the drive situated on the cover of the apparatus. If adequately designed, this beater can cope with the most violent formation of foam, and its use offers the further advantage that pressure losses in dealing with the vapours are avoided.

Digitized by Google

The heating rings are provided with a device arranged to intensively wash the incoming heating steam. This prevents deposits being formed on the heating surfaces, which would result in a decrease in the heat transfer rate and the output of the evaporator.

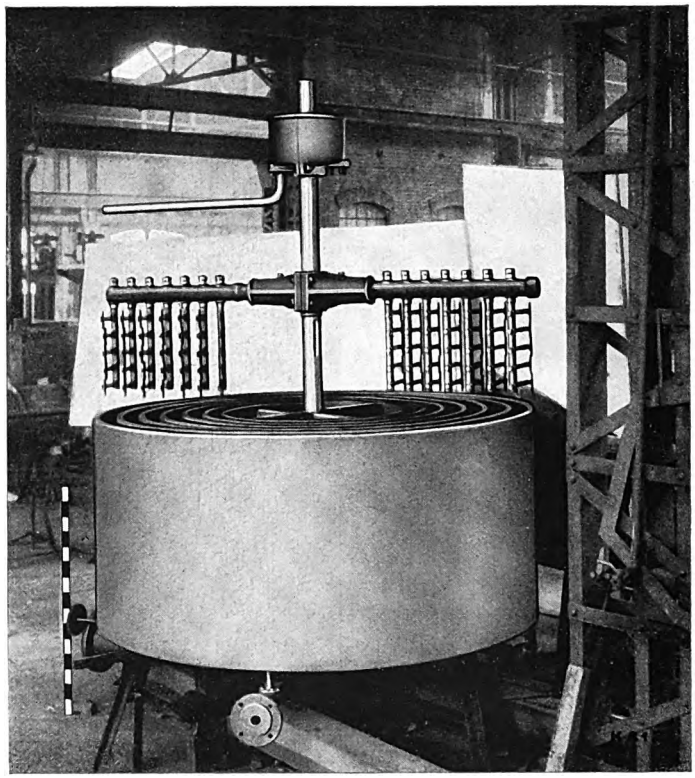

Fig. 3. A set of ring-shaped heating units with raised scrubber.

The important parts of the evaporator, such as the scrubber, the beater and the washing appliance for the steam at its entrance to the heating chambers, etc. are protected by patents. Evaporators constructed throughout of iron, and specially designed for dealing with neutralized liquor, have been thoroughly tested and tried. Experience shows that iron successfully resists the action of the liquor, when the liquor is neutralized in the hot state with CaO. Neutralization may be effected very simply, for instance by means of stirrers. The evaporators also operate with dilute liquor containing large amounts of precipitated lime.

It will be evident that the design of our evaporators is that of a mechanicalized evaporator, and it is quite natural that even experts should be suspicious of such an apparatus. However, we may point out that the results obtained with evaporators in service have been really excellent. The installations in question are not merely trial evaporators, but are such as have to satisfy the requirements of

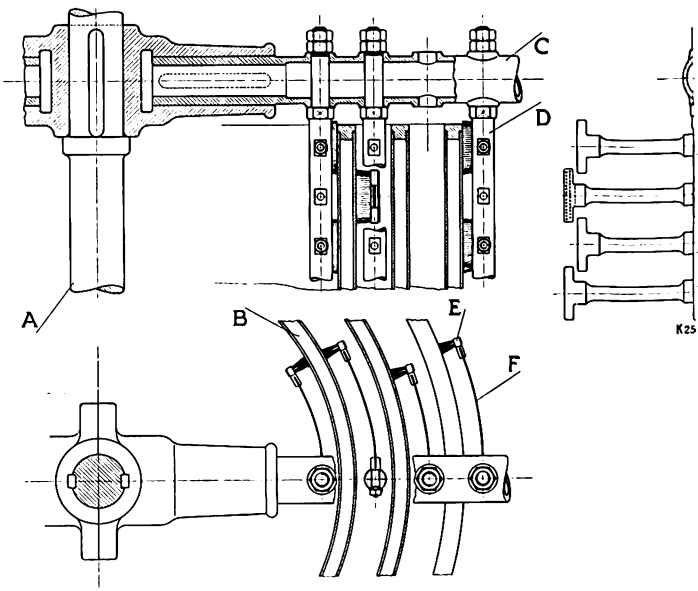

Fig. 4. Constructional details of the scrubber.

Digitized by Google

industrial service and they have operated many thousand hours. Amongst these are evaporators which concentrate solutions depositing scale and evaporators for salt solutions, whose heating surfaces without scrubbers would in a very short time be coated with inch thick incrustations. The scrubbers, if suitably designed, also satisfy the very heavy demands for such installations.

The initial cost of the apparatus is higher than that of an ordinary evaporator, but nevertheless it is quite in keeping with the special design involved. We are well aware of the fact that this special arrangement only enters the question when solutions have to be dealt with having a special tendency to form incrustations. Up till now there exists no other apparatus or process for the evaporation of such solutions, which are really satisfactory, and which meet the requirements of c o n t i n u o u s s e r v i c e exactly the same as does the above-described evaporator.

Usually the incrustation of the heating surfaces is accepted as a necessary evil and one is content with periodical cleaning. Continuous service, however, would require a considerable margin being made in the design of the evaporators, and their heating surfaces. The initial cost of a plant designed for continuous service including the spares and cleaning utensils is, therefore, not much lower than that of a plant equipped with special evaporators. The cleaning of the heating surfaces, which is equivalent to the boring of countless tubes, entails heavy expenses. The heating surface of even a medium-sized plant for handling say 17 650 cub. ft. of dilute liquor in 24 hours amounts to several hundred square feet, which must be cleaned every 2 to 6 days. Even when using mechanical tube cleaners, approx. 3 minutes for every square foot of heating surface are required. To this must be added the wear of the tubes and of the boring utensils. Another disadvantige is that such a plant operates very irregularly since the output is dependent to a large extent on the incrustations formed. On the other hand a plant equipped with our special evaporators may be kept working continuously at constant output with only the supervision of one operator. Our apparatus requires no cleaning but simply a periodical inspection at long intervals.

Of course the substances forming the incrustations may be precipitated by chemical reagents, or they may be transformed into easily soluble combinations whereby incrustations are completely eliminated This method, however, is in most cases ruled out owing to the excessive operating costs.

Of late years two new processes for the prevention of incrustations have received considerable attention, firstly, the employment of electric currents and secondly, the artificial displacement of the saturation zone from the heating unit to a special part of the apparatus. Neither of these two processes have so far been successfully adopted for evaporating sulphite liquor. The electrical method was tested by Messrs. Escher Wyss & Co. and the inventors were given the opportunity of making tests on a large scale over several months with existing evaporators. The results, however, were negative throughout.

On the strength of this fact, Messrs. Escher Wyss & Co. continued developing the evaporator with ring-shaped heating units and scrubbers so that their evaporators now satisfy the requirements of industrial service.

The evaporator is not only suitable for operation in conjunction with the Autovapor *) compression method built by Messrs. Escher Wyss & Co., but is equally adaptable to multiple evaporator plants. Our firm has at their disposal a vast experience in the design of compression and vapour condensing plants, and our system was especially adapted to the evaporation of sulphite liquor. We have built more than 50 Autovapor plants for different solutions for capacities of up to 88 000 lbs. of evaporation per hour. The compressors of these plants are sometimes driven by electric motors and sometimes by steam turbines.

The following table gives a summary of data relative to evaporators of 11 000 lbs./hr. and 55 000 lbs./hr. capacities designed for Autovapor and alternatively for quadruple effect. These capacities correspond to the handling of 4940 and 24 700 cub. ft. of dilute liquor per day at a concentration of from 7 ° Bé (1.052) to 36 ° Bé (1.332). The figures of steam, power and cooling water consumption are also given.

We would especially emphasize that the indicated values refer to c o n t i n u o u s s e r v i c e and were not obtained with a plant specially designed for testing purposes.

*) Kummler & Matter and Wirth system.

Digitized by Google

	Autovapor plant (Evaporation by compression).		Multiple evaporator plant. Quadruple effect.	
Hourly output approx. cub. ft./hr.	210	1 060	210	1 060
Initial concentration (60° F.)	1.052	1.052	1.052	1.052
° Beaumé	7	7	7	7
Final concentration (60° F.)	1.332	1.332	1.332	1.332
° Beaumé	36	36	36	36
Hourly evaporation output lbs./hr.	11 000	55 000	11 000	55 000
Hourly steam consumption lbs./hr.	660	2 750	3 750	17 710
i. e. dry steam of a pressure of lbs./sq. in.	14.2	14.2	43	43
Power consumption KW	170	800	30	100
Cooling water consumption (60° F.) cub. ft./hr.	106	350	1 060	5 295
Number of operators per shift	1	1	1	1

The values for steam and power consumption are not fixed values, as they largely depend on the size of the heating surface provided.

Fig. 5 illustrates a modern Autovapor plant equipped with evaporators of the type described above.

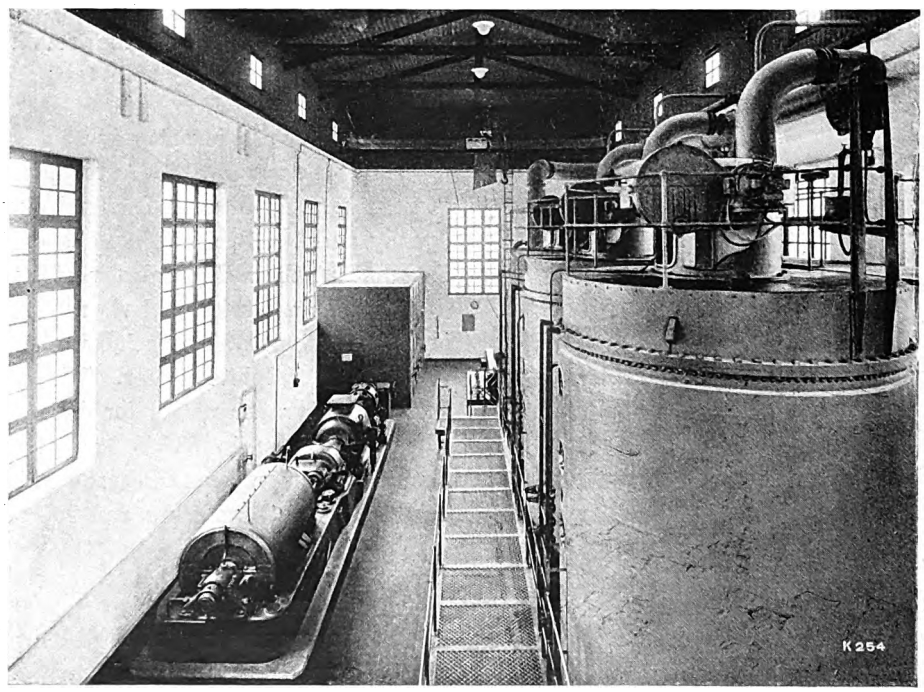

Fig. 5. Modern Autovapor plant with evaporators.

Publishers: Escher Wyss & Co., Zurich (Switzerland).
Printed by: Siegfried & Co., Zurich (Switzerland).
London Office: Escher Wyss & Co., 20 Grosvenor Gardens, Westminster, London S. W. 1.
Tokyo Office: Escher Wyss & Co., Marunouchi Building, Room 322, Tokyo.

Digitized by Google

ESCHER WYSS NEWS

Volume I

5

September 1928

Published by Escher Wyss & Co. S. A.

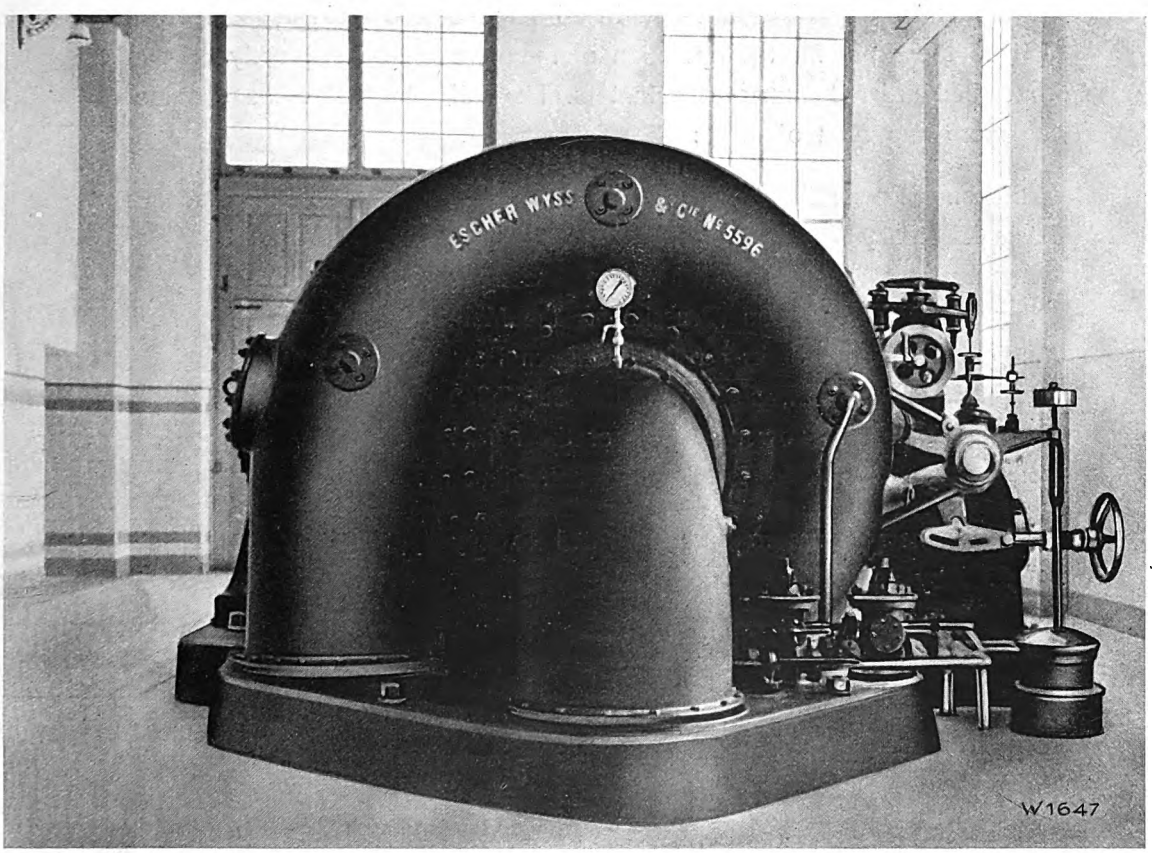

Kubel Power Station. 2500 HP turbine No. 9 equipped with universal governor.

Contents

	Page
1. Report on the governor tests performed with the new actuator of Messrs. Escher Wyss & Co on the 2500 HP Francis turbine of the Kubel Power Station	139
2. The Escher Wyss turbine governor for automatic plants	143
3. Tests with nozzles for Pelton turbines under natural operating heads	146
4. Apparatus for treating slaughter house offal, carcases and fish offal	151
5. The new cheese depot of the Emmental A.-G. in Lucerne	153
6. The Zoelly marine turbine of the twin screw steamship «Nieuw Zeeland»	159
7. The Zoelly steam turbo-locomotive (continuation 2)	163

AGENTS FOR UNITED STATES
THE NATIONAL POWER MACHINERY CORP.
2912 CHANIN BLDG., NEW YORK

Digitized by Google

Our new governor actuators, type 1925.

Lately quite a number of large installations have been equipped with our new actuator, type 25, which was fitted to the existing old turbine governors by way of experiment. In all cases considerable advantages were derived therefrom for the operation of the plant and consequently the works concerned ordered numerous actuators. The following list contains some of the more important of these:

Laufenburg Power Station	10	actuators
Basle Electricity Works for the Augst station	10	„
Olten-Aarburg Electricity Works for the Gösgen station . .	6	„
Oberweser Power Station (Prussia) for the Main Power Works	6	„
Munich Electricity Works for the Southern Power Station . .	3	„
Jungfrau Railway Co., Zurich, for the Burglauenen Works .	4	„
St. Galle-Appenzell Power Station for the Kubel Works . .	3	„
Berne Electricity Works for the Felsenau Station	2	„

The new actuators may be fitted to any type of governor formerly supplied by us.

Digitized by Google

ESCHER WYSS

High-pressure Francis Turbine

for the COMPANIA SEVILLANA DE ELECTRICIDAD, SEVILLA.

RIO CALA PLANT

Two Turbines,
each designed
for:

Head = 595 Ft.
Output = 12200 HP
Speed = 750 R. P. M.

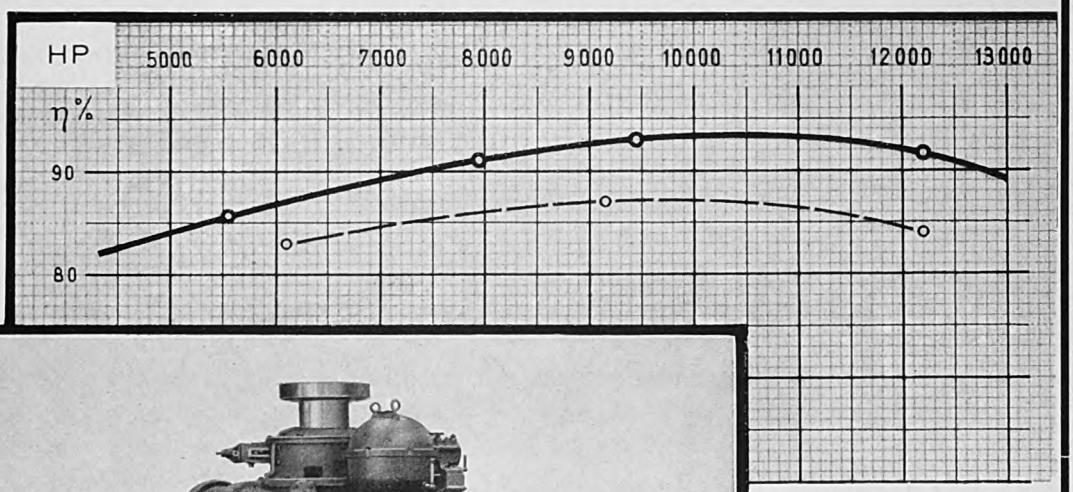

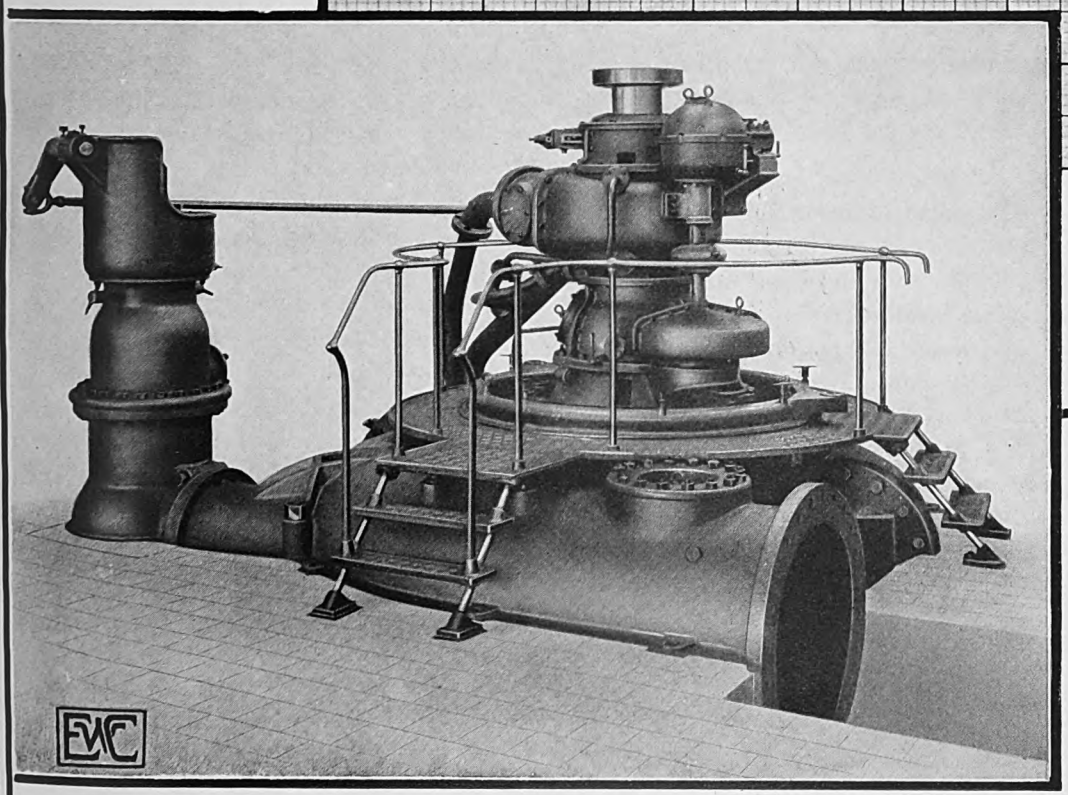

Test

Guarantee

RESULTS
of
official acceptance
tests made on
Feb. 12 th. 1928.

Efficiencies of more than 88 % from half load to full load
Maximum efficiency 93·3 %

Up to the end of March 1928 we had supplied

53 high-pressure vertical shaft Francis turbines for heads of from **330** to **960** ft.
having a total output of 869000 HP.
Output per unit up to 50000 HP.

No. 2042 W 5200 Ex. IX. 28.

Digitized by Google

AGENTS FOR UNITED STATES
THE NATIONAL POWER MACHINERY CORP.
2912 CHANIN BLDG., NEW YORK

Digitized by Google

ESCHER WYSS NEWS

PUBLISHED BY MESSRS. ESCHER WYSS & Co. S. A.

VOLUME 1 — No. 5 — SEPTEMBER 1928

The "Escher Wyss News" will be published periodically in bi-monthly issues. Reprinting of articles or illustrations appearing therein will only be permitted when source thereof is duly acknowledged. Single numbers 1/-; one year's subscription 5/-.

Report on the governor tests performed with the new actuator of Messrs. Escher Wyss & Co. on the 2500 HP Francis turbine of the Kubel Power Station.

By Prof. Dr. E. Braun, Stuttgart.

The «Schweizerische Bauzeitung», Vol. 89 (March 26 th 1927), countains a detailed description of the design and performance of the new actuator, type 1925, employed by Messrs. Escher Wyss & Co. with all types of their turbine governors, and a report on the excellent results obtained during extensive tests made in the Felsegg plant owned by Mr. P. Zweifel in Uzwil. In 1916 and 1917 Professor Dr. F. Prasil undertook a number of interesting tests with the speed governor, type 1916, supplied by Messrs. Escher Wyss & Co. for the Francis turbine set of the Kubel Works and reported on these tests in the «Schweizerische Bauzeitung» of 1917. After the new actuator had been fitted to the existing governor, further governor tests could be carried out in June 1927, thanks to the kind permission of the manager of the Works, in order to demonstrate the considerable improvement of the governing performance obtained with this new actuator.

Before entering into the details of these governor tests it may be of interest to give a short description of the machine set with which the tests were carried out. The single-wheel Francis turbine with overhung wheel and horizontal shaft is coupled direct to a three-phase generator and designed for an output of 2500 HP at 500 r. p. m. and at a head of 287 ft. The automatic governor is an exception in that it is not actuated by pressure oil, but by means of carefully filtered pressure water. In view of the pipeline conditions, the turbine is equipped with an automatic pressure regulator of the firm's well-known design. The flywheel momentum of the set is $WR^2 = 147\,000$ ft.^{2} lbs.

The set was loaded by means of a water resistance, the output being measured by means of the switchboard instruments and checked by comparison with the loads corresponding to various governor strokes and determined during the official acceptance tests. The excitation circuit remained closed when the load was thrown off. As the tests had to be performed during the operation of the plant, the effective head fluctuated according to the load and averaged 288 ft. The recording Horn tachograph for recording the movements of the servomotor was driven by a belt from the turbine shaft.

After careful preparation, the tests were made on June 25 th 1927. In addition to the author, Chief Engineer Gagg, Engineer Rinderknecht and Mr. Erzer, foreman of Messrs. Escher Wyss & Co. were present at the tests.

To begin with, a series of tests A were made with a cyclic irregularity of approx. 3.5 % and with normal damping.

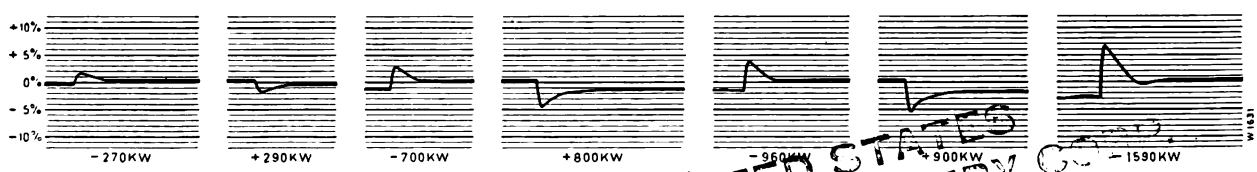

Fig. 1. Test series

AGENTS FOR UNITED STATES
THE NATIONAL POWER MACHINERY CO.
912 CHANIN BLDG., NEW YORK

Digitized by Google

This adjustment of the actuator approximately corresponds to normal service conditions. The tachograph records, Fig. 1, show a very fine transition process; at small load reductions a marked retardation of the governing performance is noticeable.

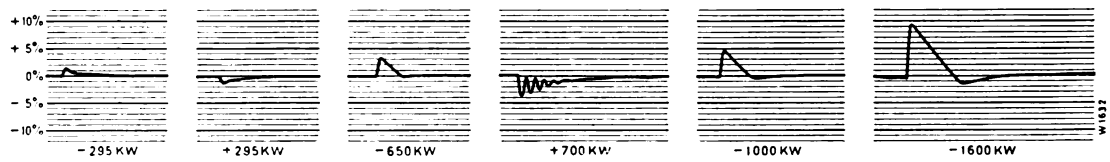

Fig. 2. Test series B; $\delta = 0\,\%$.

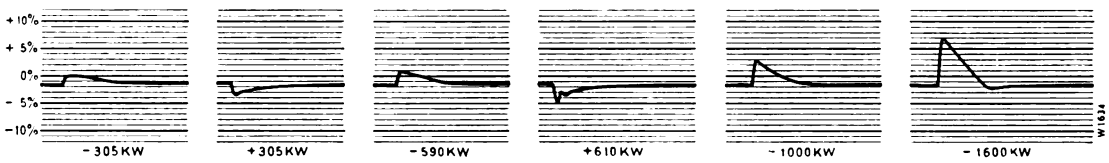

Fig. 3. Test series D; $\delta = 0\,\%$.

transition free of oscillations at all variations of the load.

The very considerable mass effect of the pipeline at the different loads should thereby not be overlooked.

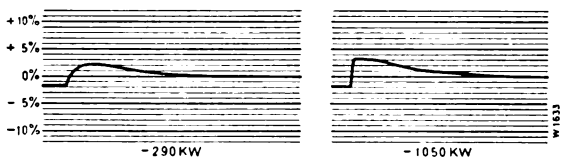

Fig. 4. Test series C; $\delta = 0\,\%$.

The test series B was performed with a cyclic irregularity of 0 %. The tachograph records, Fig. 2, illustrate the results. The transition must be considered very good for this isodromic adjustment. An increase of the damping effect (resetting time of cataract) resulted in the test series D. The tachograph records, Fig. 3, at medium and large load reductions show a considerable improvement of the transition process.

In order to more closely investigate this effect, damping was intentionally exaggerated to the maximum degree for the intermediate test series C. The two tachograph records, Fig. 4, clearly demonstrate the considerable retardation of the governing performance.

In test series E the normal admission diaphragm of 0.88″ bore was substituted by a diaphragm of only 0.32″ bore whereby a considerable prolongation of the closing time of the governor and increase of the speed fluctuations was obtained. The tachograph records, Fig. 5, likewise for isodromic adjustment, show a very favourable transition at all load reductions, which might even have been improved by sligtly increasing the damping effect.

Fig. 6 illustrates the speed fluctuations of the

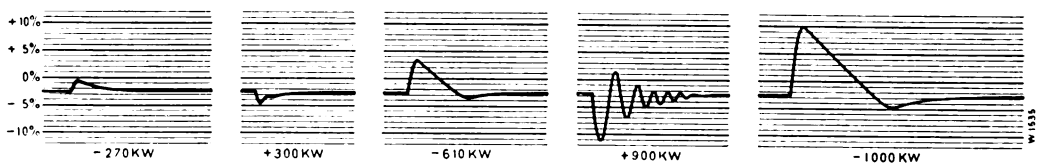

Fig. 5. Test series E; $\delta = 0\,\%$

above-mentioned test series. Passing from the cyclic irregularity of 3.5 % to 0 % results in a diminution of the speed fluctuations by about 0.7 %. The difference between the speed fluctuations of the test series B and D is practically nil.

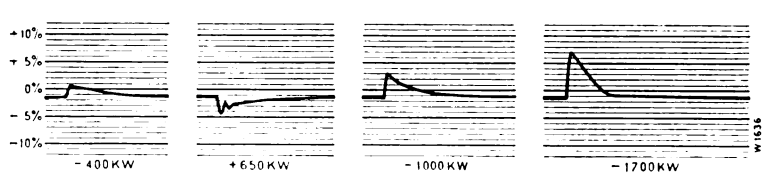

Fig. 7. Test series F; $\delta = 0.2\,\%$.

Digitized by Google

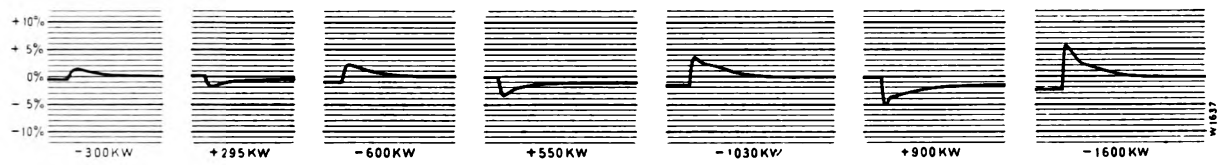

Fig. 8. Test series G; $\delta = 2.5\,\%$.

The shape of the short line C very clearly illustrates the unfavourable influence of exaggerated damping at small load reductions, which are of special importance in practical service.

test series F and G the damping was the same for both series, whilst it was somewhat reduced for the test series H. A number of tachograph records are reproduced in Figs. 7, 8 and 9. In each of these the

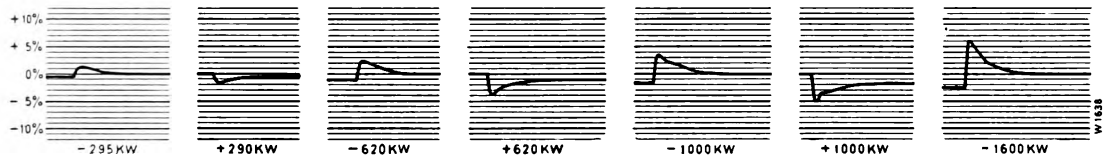

Fig. 9. Test series H; $\delta = 2.5\,\%$.

After completing these test series, the normal diaphragm was removed and the closing time of the governor shortened. The test series F, G and H were performed with this adjustment, to wit series F with a cyclic irregularity of only 0.2 % and the series G and H with one of approx. 2.5 %. With the

transition is remarkably good. In Fig. 10, the speed fluctuations are plotted over the load fluctuations. The increase of the cyclic irregularity from 0.2 % to 2.5 % in the test series F and G for uniform adjustment of the damping increases the speed fluctuation by about 0.5 %. The alteration of the damping in series G and H is not perceptible in the speed fluctuations.

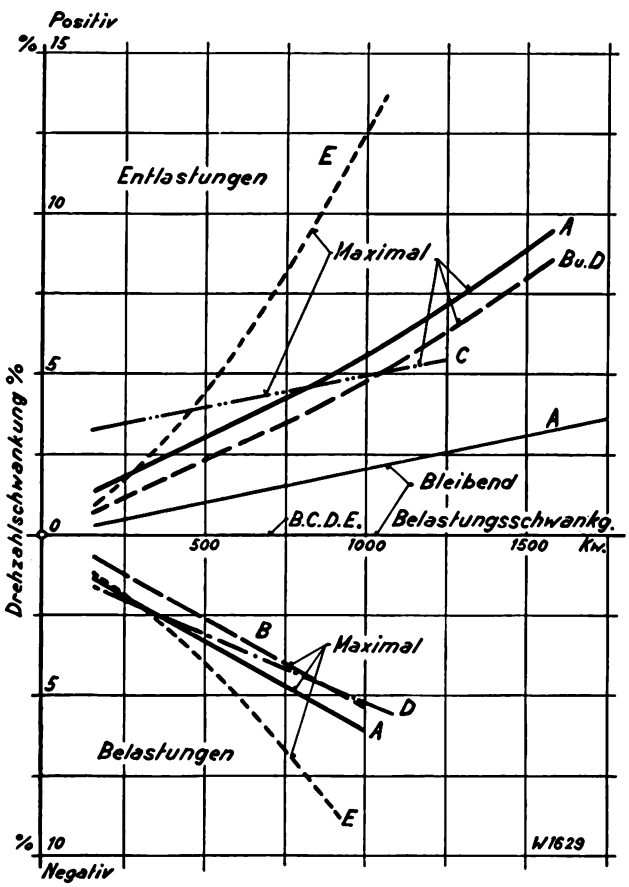

Fig. 6.

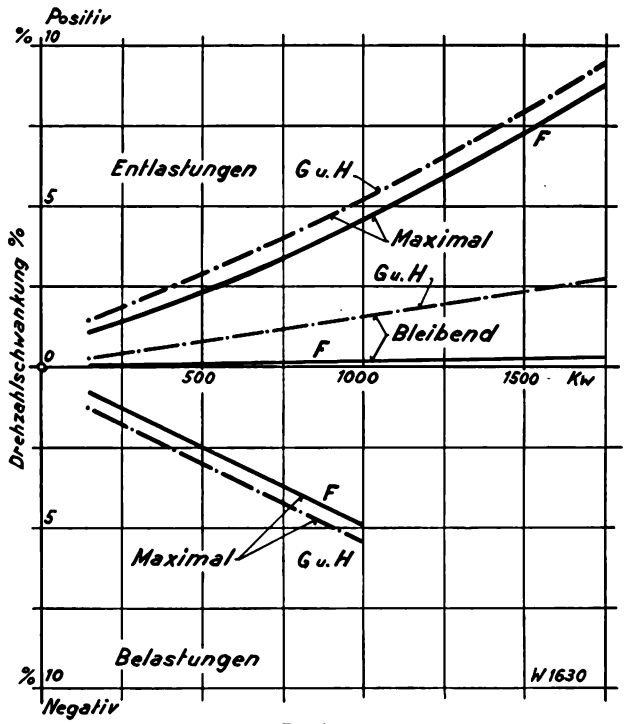

Fig 10.

Positiv = positive; Negativ = negative; Drehzahlschwankung = speed fluctuation; Entlastung = load reduction; Maximal = maximum; Bleibend = permanent; Belastungsschwankg. = fluctuation of load; Belastungen = load.

Digitized by Google

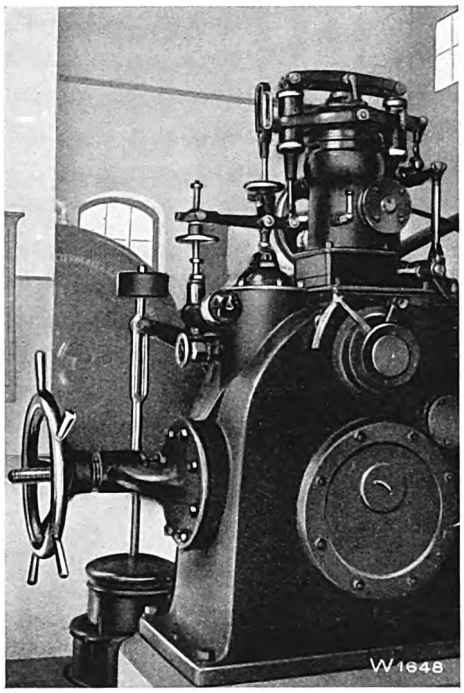

Governor with actuator, type 25, on the 2500 HP turbine No 9 of the Kubel Power Station.

After re-inserting the normal diaphragm of 0.88″ bore, a further series of tests I with a cyclic irregularity of approx. 2.5 % and increased speed of the paper strip were made. The results of these tests, Fig. 11, to all intents and purposes coincide with the results of the first test series A.

Tests with negative cyclic irregularity had to be foregone owing to the lack of time available for performing the tests.

The advantages of the actuator, type 1925, already demonstrated during the tests made in

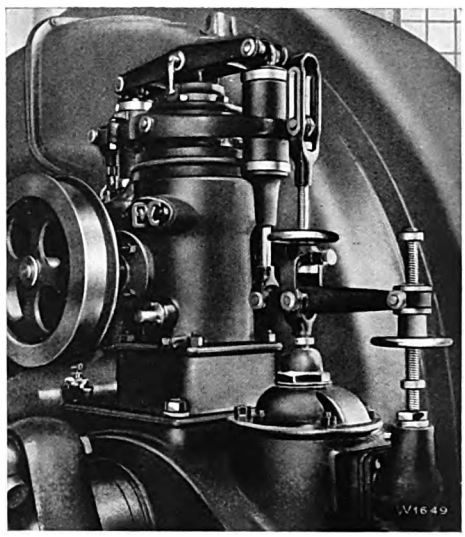

Actuator, type 25, viewed from the driving end (2500 HP turbine No. 9 of the Kubel Power Station).

Felsegg, were fully confirmed by the tests carried out at the Kubel Works. Although small speed fluctuations could not be obtained as during the tests of 1916 and 1917, yet the above results show that the speed transition during the governing performance has been considerably improved. The speed transition of the test series A and H or I with the customary degree of cyclic irregularity should satisfy all justified requirements, and likewise the transition for isodromic adjustment is remarkably good. The tests divulge the interesting fact that it is quite useless by increasing the damping effect to go too far in the way of improving the form of the tachograph records at large load reductions if the speed fluctuations at smaller load reductions, which in practical service play the more important part, are thereby unfavourably influenced.

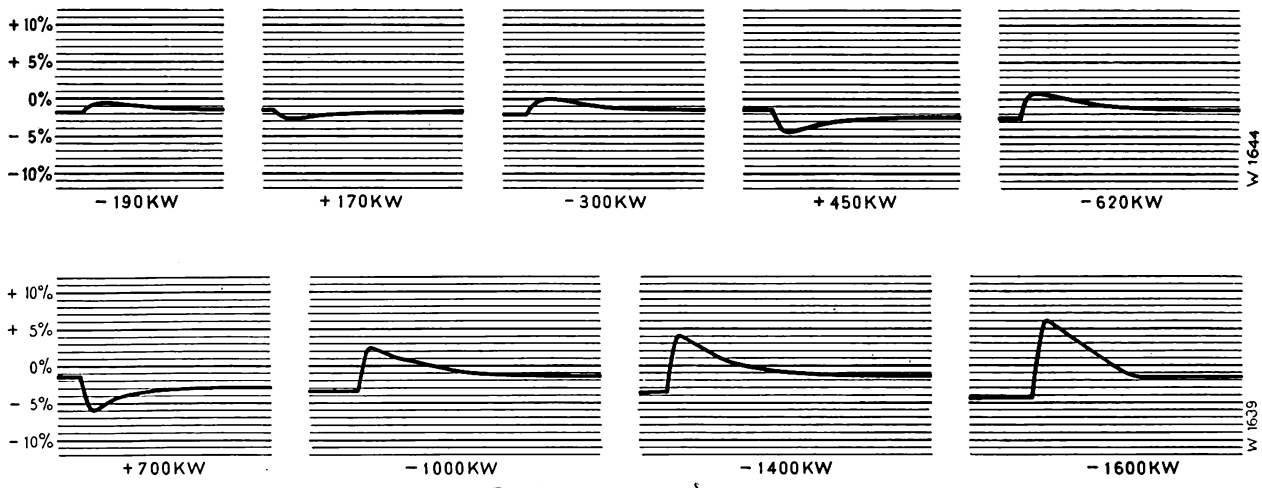

Fig. 11. Test series I; $\delta = 2.5\,\%$.

Digitized by Google

The Escher Wyss turbine governor for automatic plants.*)

By Anton Gagg.

The tendency to reduce the running expenses, especially of small turbine plants linked up to a main station, is increasingly paving the way to automatic operation of such plants. For this purpose apparatus have to be provided, which, after the high-tension supply has been connected, automatically start the turbine, bring it up to its rated speed and after paralleling the generator driven by the turbine, put on the load.

In the majority of cases, when starting, the main stop valve of the turbine is first of all opened, which is best effected by means of a magnet, which

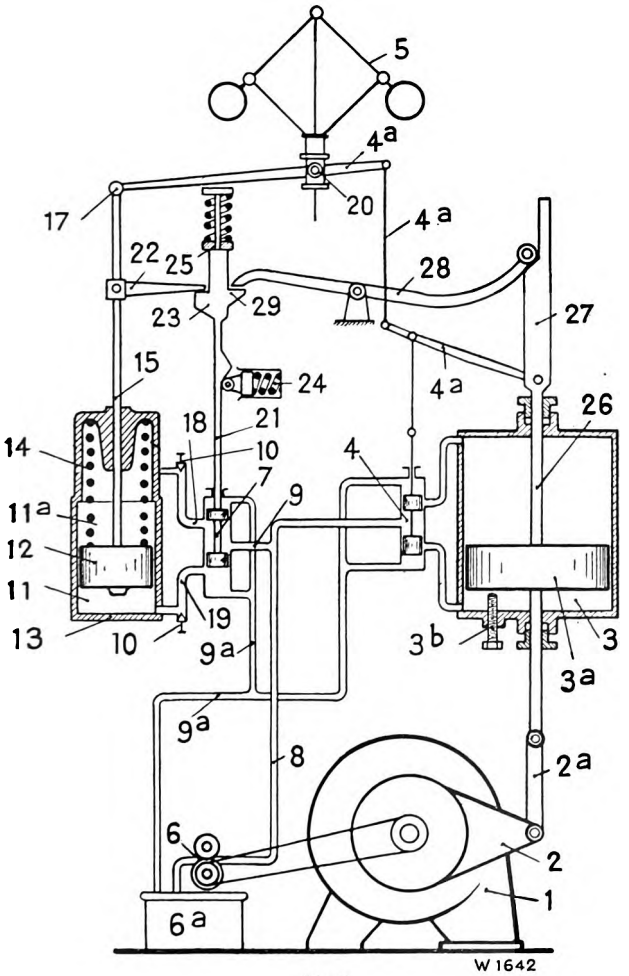

Fig. 1.

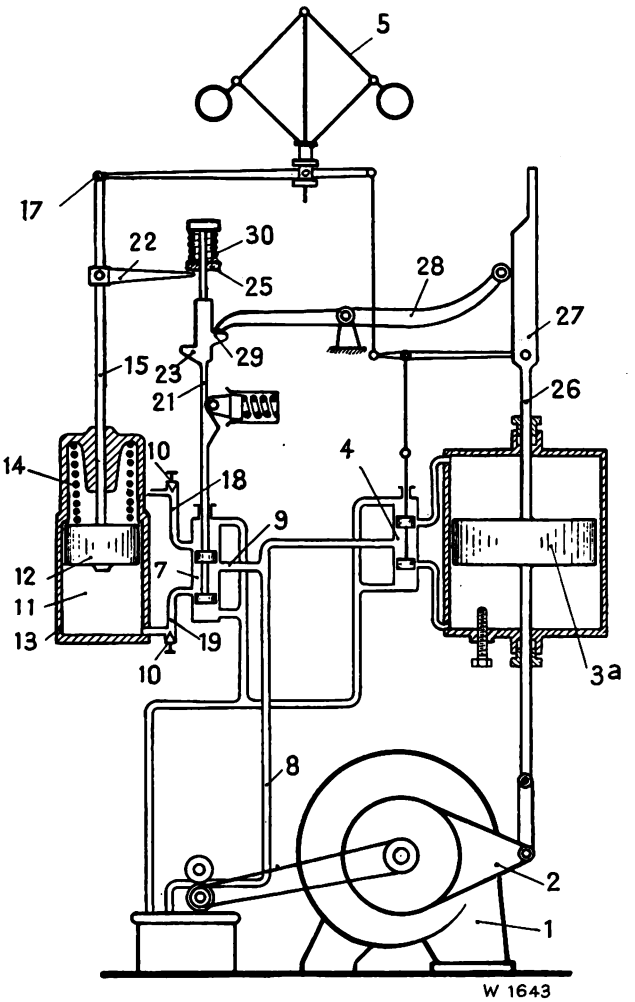

Fig. 2.

is energized as soon as the high-tension supply is switched on, and which operates the control gear of this valve. To start the turbine itself, two methods are customary. Firstly, when stopping the turbine, which is performed by closing the main stop valve, care is taken that the turbine is closed only to such an extent as necessary for no-load running so that when put under pressure it starts of itself. The governor pump driven by the turbine then at once produces pressure and the governor is ready to perform all other service operations. This method is especially suitable in connection with so-called circulating governors without accumulation of the oil under pressure.

With the second method, as soon as the supply is switched on, a special electric relay first of all starts the oil pump of the governor, which in this case is driven by an electric motor, and produces the necessary oil pressure. The completely closed turbine is then opened by the control gear of the

*) See also frontispiece.

Digitized by Google

governor. This method is especially suitable for governors fitted with air vessels.

Hitherto in all cases a number of electrical apparatus, connected with the governor, were required to initiate the above-mentioned performances and the corresponding movements of the governor. Our new type of governor for automatic plants avoids all these apparatus, inasmuch as the governor, as soon as the required minimum oil pressure has been produced, first of all automatically opens the turbine, then slowly adjusts its speed until electric paralleling has been effected and finally automatically fully opens the turbine. The extent to which the turbine is opened, may if desirable, be kept within certain limits by means of an automatic water level regulator. The equipment at the same time serves as safety device, especially for governors with accumulation of pressure oil (air vessel governors), inasmuch as the lever gear of the governor automatically tends to close when the oil pressure drops below the minimum required for safe operation of the plant.

Figs. 1 and 2 diagrammatically illustrate the new equipment. In Fig. 1, all parts are shown in the positions they occupy for no-load running of the turbine, whilst Fig. 2 illustrates the same parts in their positions when the turbine is running on half load. In both illustrations, 1 is the water turbine controlled by means of a servomotor 3 by way of the regulating ring 2 and the rod 2 a. The servomotor is influenced by a control valve 4 operated by the centrifugal governor 5 over lever 4 a. The oil under pressure required to actuate the servomotor 3 is supplied by a toothed wheel pump 6 through pipe 8 to the pilot valve 4. A pipe 9, leading to the pilot valve 7 of a small servomotor, is connected to pipe 8. Two pipes 18 and 19 lead from the pilot valve 7 to the chambers 11 and 11 a situated underneath and over the piston 12 moving in the cylinder of the servomotor. Piston 12 with its piston rod 15 forms a device acting on point 17 of the governor lever system for adjusting the speed of the turbine. The higher the position of point 17, the higher must the sleeve 20 of the centrifugal governor 5 move in order to secure the central position of pilot valve 4 for a given position of the servomotor piston 3 a. It is evident that the adjusted speed of the turbine 1 must be the higher, the higher the point 17.

The top side of piston 12 is loaded by a spring 14 tending to press the piston into its lowest position, in which it touches the bottom 13 of the cylinder, whilst the levers of the actuator are so set that even in the lowest position of sleeve 20 of the centrifugal governor, the turbine cannot be opened. As mentioned above, piston 3 a of servomotor 3, in the position shown in Fig. 1, is set for no-load admission of turbine 1. It is assumed that we are dealing with a plant in which the turbine is prevented from completely closing by the stop 3 b, so that it starts on opening the main stop valve. The oil pump 6 then at once supplies oil from the tank 6a to the pipe 8. Contrary to the position shown in the illustration, piston 12 is now in its lowest position, in which catch 22 of piston rod 15 presses on the lug 23 of valve rod 21 and keeps valve 7 in its lowest position (see Fig. 2). Pipe 9, therefore, connects with pipe 19 and the oil pressure produced by pump 6 acts on the bottom side of piston 12. As soon as its force exceeds that of spring 14, the piston 12 rises and moves point 17 upwards, whereby pilot valve 4 is set to opening. The servomotor piston 3 a then performs an upward movement tending to open the turbine 1; the oil-pressure speed governor is thereby brought into action and influenced by the centrifugal governor 5 in the well-known manner. The adjustable throttling device 10 permits of exact regulation of the speed at which piston 12 is moved by the oil pressure, i. e. of an adjustment of the machine's speed.

The upward movement of piston 12 with piston rod 15, tending to raise the speed of the machine,

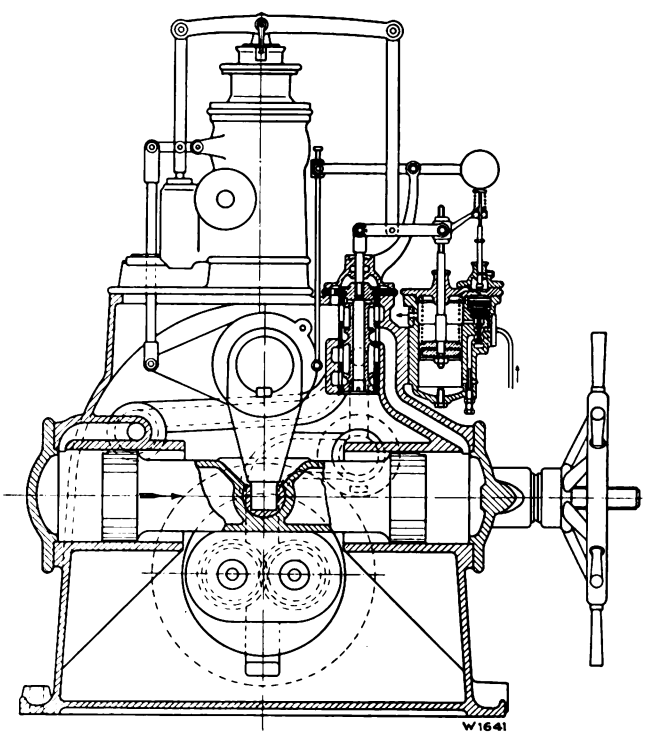

Fig. 3.

Digitized by Google

continues until catch 22 strikes the stop 25. The moment this takes place, rod 21 with control piston 7 is moved upwards. A device 24 prevents rod 21 remaining in the central position, which latter including control piston 7, therefore, assumes the upper position indicated in Fig. 1. In this position, chamber 11 a over piston 12 receives oil under pressure through pipe 18, whilst chamber 11 under piston 12 is connected with discharge pipe 9 a via pipe 19. Piston 12, therefore, under the action of the oil pressure in chamber 11 a and the influence of spring 14 moves downwards, which movement will continue until the piston rod 21 is reversed by the catch 22 striking the lug 23. These movements, whose speed may be controlled by the two throttling devices 10, are repeated and vary the speed of the machine near its mean value so long until the generator coupled with the turbine has been paralleled by means of a relay provided for the purpose.

As long as this paralleling has not been effected, the servomotor piston 3 a, owing to the movements of piston 12, only slightly alters its position, because the centrifugal governor 5 directly follows the movements of point 17. However, as soon as the generator is paralleled, the speed of the turbine 1 is maintained by the busbars. The centrifugal governor 5 now no longer follows the movements of point 17 and with the next upward movement of piston 12, pilot valve 4 is moved downwards, whereby the space under servomotor piston 3 a is put under pressure causing the piston to rise, simultaneously opening turbine 1. At the same time rod 26 with glide 27, rigidly connected to servomotor piston 3 a, moves upwards and the interlocking lever 28 is forced into the new position, shown in Fig. 2, in which it presses on a lug 29 of rod 21 and permanently keeps the latter in its lowest position. Chamber 11 is then under oil pressure so that piston 12 permanently remains in the uppermost position indicated in Fig. 2. Catch 22 now moves the stop 25 alone upwards compressing the spring 30, whilst rod 21 remains in the lower position. The governor is now permanently adjusted for maximum speed and keeps the turbine under full load unless an existing water level regulator acts contrarily.

Should the oil pressure whilst the plant operates drop below a certain limit determined by the tension of the spring 14, for instance through leakage losses, then piston 12 travels downwards, reverses the levers for closing and thus automatically prevents the machine racing should a reduction of the load take place.

In practice, provision is made for the adjustibility of the range within which the speed may be varied before paralleling, likewise for the adjustibility of the tension of spring 14 and consequently of the oil pressure at which the whole apparatus operates. Fig. 3 illustrates the constructional design of the apparatus in connection with a universal governor of the Escher Wyss system. The illustration shows that the complete apparatus is comparatively small and may be harmoniously combined with the governor. We call attention to the fact that a governor designed on the lines set forth above, as soon as the oil under pressure required for operating the servomotor is available, automatically performs all actions up to fully loading the water turbine, once the generator has been paralleled, without the aid of any electrical apparatus. This represents a considerable step forward in the field of automatic hydraulic power plants.

Digitized by Google

Tests with nozzles for Pelton turbines under natural operating heads.

Communications from our own hydraulic laboratory.

By R. Thomann.

The conditions of flow in Pelton turbines are of such a complicated nature that experimental research has always been given the preference over theoretical deductions. In diverse laboratories many runner wheels and nozzles have been investigated but in most cases the heads employed were considerably smaller than those obtaining in normal practice. Naturally the acceptance tests of such plants supply very valuable information regarding the difference between the various designs. For many reasons, however, elaborate tests in the majority of cases are impracticable.

Thanks to the courtesy of the Kraftwerke Oberhasli A.-G., an opportunity was offered in the months of August and September 1927 to connect a small test pipeline to the pressure pipeline of the Gelmer Power Station and to erect a test stand for nozzle and jet deflector tests.

In the following article, data concerning the test equipment and the test methods will be given, whilst a discussion of the test results must be postponed until the comparative measurements now being undertaken in our laboratory are completed.

The purpose of the tests was primarily to determine exactly the behaviour of free jets under different heads, and to obtain quantitative results. Other tests were conducted to investigate the inner structure of the jets, i. e. the distribution of the velocity over a certain cross-section under varying conditions. These results were obtained with impulse measurements by means of a Pitot tube. From these measurements important values may be derived in a very simple manner and important conclusions drawn regarding the behaviour of the jet. For the final evaluation of the results, supplementary and comparative laboratory measurements will be undertaken, which will establish qualitative differences.

To carry out the tests, the pressure pipeline of the Gelmer Power Station in the Handeck with a water volume of 22 gallons per second under heads of up to 1320 ft. was available, as mentioned above. A branch pipeline was connected to this pipeline whereby several bends were unavoidable. However, it was possible to provide a long piece of straight piping before the inlet bend. The curvature radius of this bend amounted to 20″, whilst the internal diameter of the pipe was 6″. The nozzles and needles illustrated in Fig. 1 were tested with this branch pipeline.

Fig. 2 shows the test equipment. The inlet bend was securely held by a channel-iron frame carefully embedded in concrete. The nozzles were fixed to this bend, the needle opening being adjustable in the well-known manner by means of a handwheel and spindle. The inlet bend was provided with a precision gauge for measuring the pressure, Fig. 2. A Pitot tube of special design, connected with a

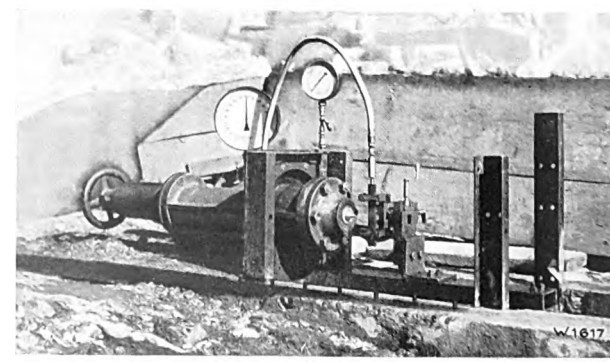

Fig. 2. Test equipment.

Digitized by Google

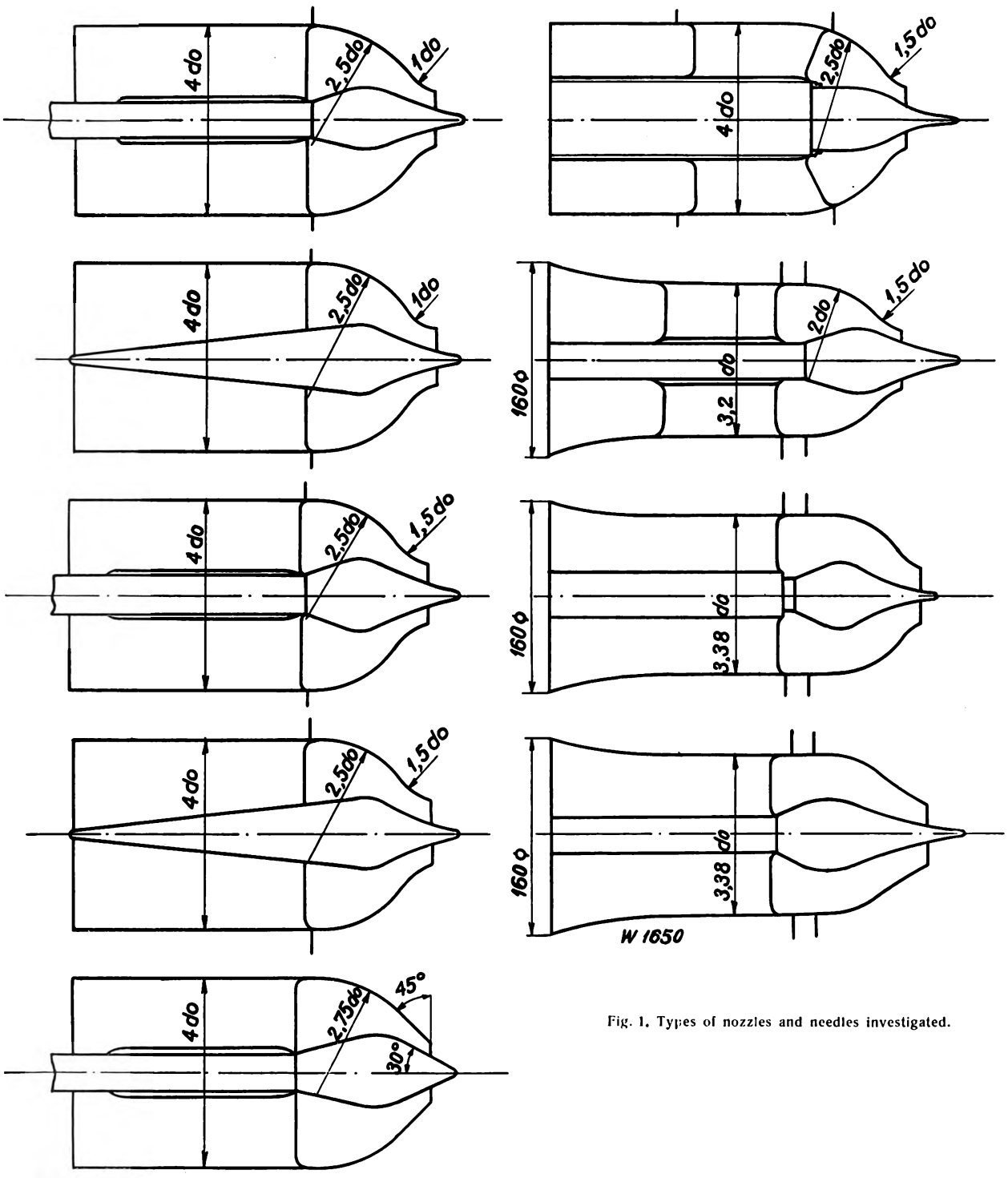

Fig. 1. Types of nozzles and needles investigated.

second gauge by means of a high-pressure hose, served for the impulse measurements.

This Pitot tube, Fig. 3, which did excellent service, consists of a bronze rod of knife-shaped cross-section with very keen edges. It is drilled from one end up to the centre, where a small capillary tube is soldered in, which communicates with the longitudinal bore and serves as a measuring pipe. It is advisable to make this capillary as small as possible ($< 0:02''$ diam.) in order to obtain accurate measurements in the outer strata where the pressure and velocity diminish very considerably.

Digitized by Google

This Pitot tube was clamped in a holder mounted on a small lathe slide, Fig. 3. The slide allowed the Pitot tube being introduced to the jet, and moved horizontally and vertically, in short of being moved into any desired position.

The lathe slide was bolted to a longitudinal joist provided with slots and holes at different distances. Fig. 4 illustrates the equipment in operation.

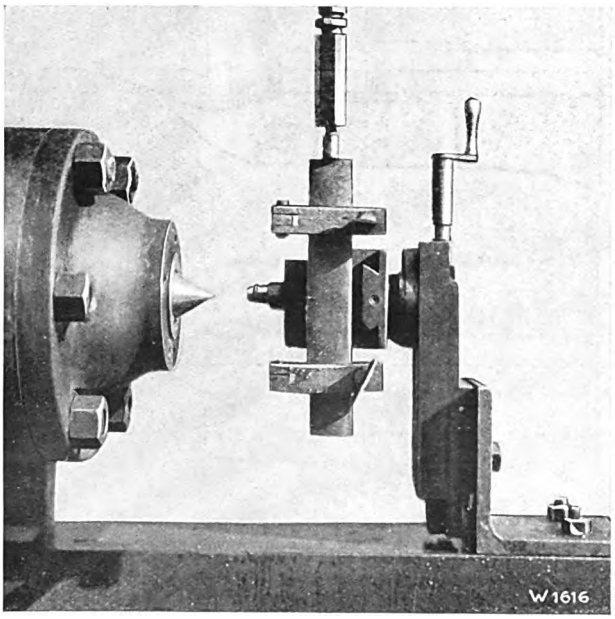

Fig. 3. Measuring equipment.

With this equipment the following measurements *) were made, using different types of nozzles and needles:

a) The pressure at the inlet.
b) The velocity pressure head along a diameter.

The measurements were taken for various openings of and distances from the nozzle orifice under heads of 330, 825 and 1320 ft. and inlet conditions varied widely, wherebey the nozzles and needles shown overleaf were employed.

The distance between the point of the Pitot tube and the nozzle orifice was designated by Z, the position along a horizontal diameter by x and along a vertical diameter by y. An arbitrary zero point was chosen for x and y.

The measurement of the pressure at the inlet was naturally quite a simple matter, as the pressure remained practically constant. The measurement of the velocity pressure head was more difficult. In the outer zones, in which the pressure rises from zero to the maximum within a distance of a few

Fig. 4. The equipment in operation.

thousandths of an inch, it was not always possible to avoid very considerable fluctuations of the gauge which at times occurred owing to the finite diameter of the small Pitot tube. In the central zones, in wihch the influence of the needle friction makes itself felt, the measurements were rendered easier. Nevertheless, the measurements turned out very fair, as proved by their evaluation.

Difficulties were also encountered when measuring at greater distances from the nozzle because the air friction had already considerably roughened the jet so that it was less compact.

Hereunder are given the results obtained with a certain type of nozzle. On the left hand side of Fig. 5 is shown the pressure distribution obtained with a nozzle at 2″ distance from the orifice of the nozzle and for different openings. The graph clearly shows how the velocity pressure and consequently also the velocity diminish considerably in the outer zones owing to friction. In the core of the jet the

*) Similar measurements have been made in America and were published in „The Engineer", January 1910 under: The application of the Pitot Tube to the Testing of Impulse Water-Wheels, by M. Rankine Eckart.
See also: William Monroe White: Impulse Water Wheels in „Transactions of the First World Power Conference 1924" Vol. II, and Reichel & Wagenbach: „Versuche an Becherturbinen", Zeitschrift des V. D. I., 1913, Vol. 57.

Digitized by Google

water particles are also retarded owing to the friction along the needle. With smaller openings, where the needle lies closer to the measured section, this is more conspicuous than with larger openings. Gradually a compensation between the different zones takes place, which is the more complete the

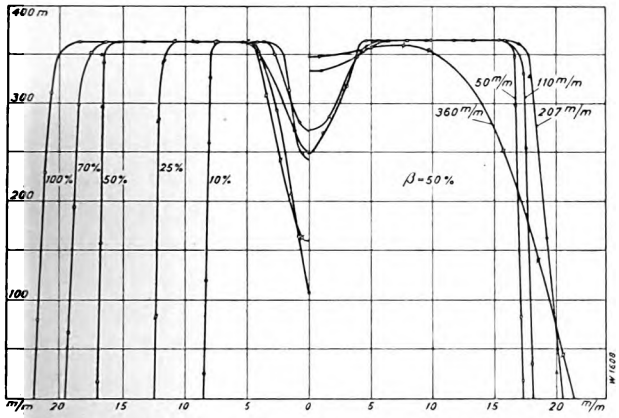

Fig. 5. Left hand: Variation of velocity pressure at 2″ distance from the nozzle for openings of from 10 % to 100 %.
Right hand: Variation of velocity pressure for an opening of 50 % at distances of from 2″ to 14.4″.

further one moves from the nozzle, as shown on the right hand side of Fig. 5. Here the pressure distribution for a constant opening and varying distances is plotted. The influence of air friction is especially conspicuous, which at a distance of 14.4″ already affects all the particles of water.

Fig. 6 illustrates the same measurements made with another nozzle. The illustration plainly shows that the outer zones are now much les affected, i. e. retarded by the action of nozzle and air friction.

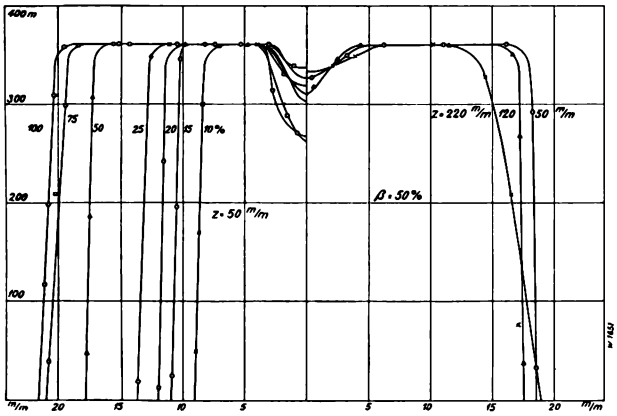

Fig. 6. Left hand: Variation of velocity pressure at 2″ distance from the nozzle for openings of from 10 % to 100 %.
Right hand: Variation of velocity pressure for an opening of 50 % at distances of from 2″ to 8.8″.

This clearly proves that by suitable design of the nozzle and needle, friction and the resulting energy losses may be reduced. These losses are to a great extent a function of the exterior condition of the jet, as a rough surface favours friction. The calculation of the water volume is now quite a simple matter. Let

$$Q = \int_0^R 2\pi r v dr, \text{ or since } v = \sqrt{2gh}$$

$$Q = 2\pi\sqrt{2g}\int_0^R r\sqrt{h}\, dr$$

wherein h represents the velocity pressure head measured over the radius r. If the asymmetry of the two radii is considerable, both radii have to be integrated and the mean value inserted.

Let us now investigate the course of the kinetic energy along the jet. The kinetic energy flowing through any given section per second is $\int \frac{m v^2}{2}$, wherein m designates the mass passing through a surface element. This integral is easily calculated and may be written as follows:

$E_x = 2\gamma\pi\sqrt{2g}\int_0^R r h^{3/2} dr$, wherein h again designates the velocity pressure measured over the radius r. E_x may be ascertained for all measured cross-sections. Fig. 7 shows the variation of this value for different openings with the distance from the nozzle orifice. From this it will be seen that the available energy E_x increasingly diminishes the greater the distance from the nozzle. This diminution is primarily due to the influence of air friction and the resulting retardation of the outer strata.

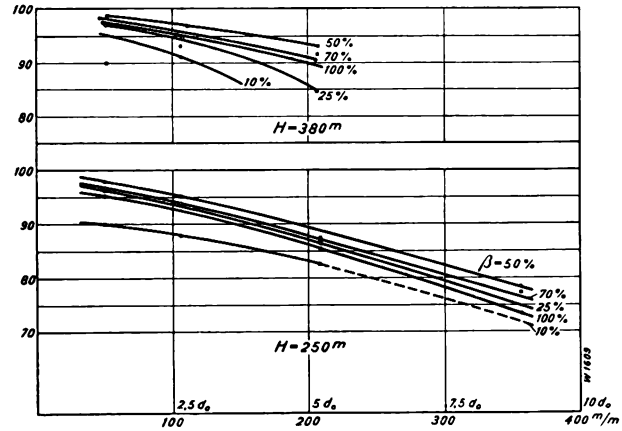

Fig. 7. Kinetic energy as a function of the distance from the nozzle orifice.

Digitized by Google

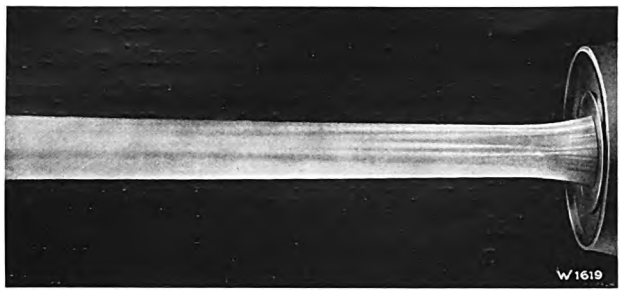

Fig. 8. Nozzle H I, opening 50 %, head 1238 ft.

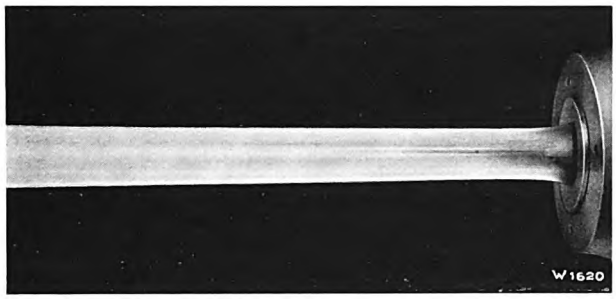

Fig. 9. Nozzle H III, opening 50 %, head 1220 ft.

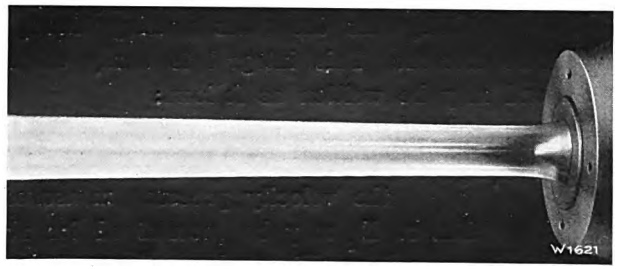

Fig. 10. Nozzle H III, opening 50 %, head 825 ft.

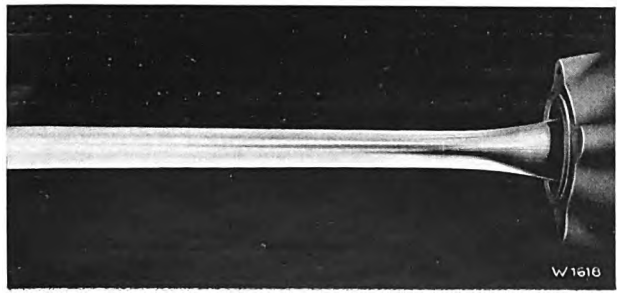

Fig. 11. Nozzle H VII, opening 25 %, head 825 ft.

Since in the above equation of E_x the $^3/_2$ power of the velocity pressure h is multiplied by the corresponding radius, the considerable reduction of the kinetic energy of the outer strata is self-explanatory. If we plot the same curve E_x for the measurements contained in Fig. 6, we find that in this case the reduction of kinetic energy with increasing distance from the nozzle is much less pronounced. The smaller retardation of the outer zones naturally results in smaller losses.

Figs. 8 to 11 illustrate some jets obtained with different types of nozzles. The difference in the external condition of the jets is plainly visible from nozzle to nozzle. The often stipulated «crystal clear» jet was obtained at the exit of the nozzle, as shown in Fig. 10, but could not be obtained at a greater distance from the nozzle. In these zones it is practically impossible to obtain «crystal clear» jets under a head of 1320 ft., since the influence of air friction always prevails. However, this condition is not an unequivocal criterion for the goodness of the jet, as proved beyond question by the measurements. The most favourable conditions are not necessarily coincident with the best outward appearance of the jet.

The problem of utilising the jet energy by means of buckets is well known to be very complicated. The individual water strata impinge on different diameters with different velocities and are deflected there. This deflection in turn differs for each element. To master the task one was hitherto content to ascertain the final result of these energy transformations by braking the wheels. However, these measurements have not permitted a deep insight in the nature of these phenomena. The above-described tests have now established a basis for laboratory research, whose purpose it is to investigate the mechanism of these phenomena.

Digitized by Google

Apparatus for treating slaughter house offal, carcases and fish offal.

By W. Steinmann.

In slaughter houses official inspectors confiscate infected and unrelishable parts of the animals' bodies and frequently also complete carcases. The destruction of such confiscated parts must be performed hygienically in an effective manner so that spreading of disease germs contained therein is effectively avoided. At the same time the valuable substances, such as fat and albumen, which this material contains, should be recovered.

Apart from confiscated material from slaughter houses, carcases found in the country are collected and sent for treatment to offal utilization plants. The destruction of carcases in such plants more effectively prevents the spreading of the germs of disease than burying them in the earth. These germs may be forced to the surface by ground water or vegetation and then they give rise to new epidemics. For this reason the burying of carcases is nowadays not accepted as hygienic and the sanitary authorities, therefore, insist on the destruction of the carcases in offal utilization plants.

Holland has of late energetically taken up the destruction of carcases in such plants, which are run by a private company, the Dutch Thermochemical Works in Amsterdam. This company has arranged by agreement for the supply of carcase material from the parishes and under supervision of the authorities collects it for further treatment. The company has erected its first plant in the Province of Friesland where the confiscated slaughter house material and the carcases of the whole of Northern Holland are handled. The apparatus for this plant was supplied by Messrs. Escher Wyss & Co.

Very considerable quantities of confiscated material and carcasses have to be dealt with, amounting annually to 550 tons in Zurich, to an average of 3220 tons in Berlin before the outbreak of the war, and to 6000 tons for the Friesland plant. From the economic point of view the treatment of this material is also of importance. When treating the slaughter house offal with the Escher Wyss apparatus, approx. 20 per cent of meat meal and 5 per cent of fat are recovered. The meat meal, which is an excellent foodstuff containing about 60 per cent of protein, is sold at about 1.8 d per lb. The fat is used in various industries and is sold at 3.5 d per lb. From this results a gross yield of about 0.55 d per lb. of slaughter house offal treated. The yield is still greater when handling carcases, amounting to nearly 0.85 d per lb.

The correct treatment of the carcase material requires great experience and can be performed only with adequate apparatus.

Messrs. Escher Wyss & Co. have manufactured these apparatus as a speciality for the last 10 years and have executed a large number of plants in Switzerland and foreign countries. A characteristic feature of the apparatus is that the raw material is completely worked up into fat and meat meal and the whole content of protein of the raw material is, therefore, contained in the meat meal. With apparatus of other make, the broth produced during the cooking process must be poured away owing to technical difficulties, whereby a large part of soluble protein is lost. The confiscated slaughter house material is freed from grease during 7 to 8 hours in the Escher Wyss apparatus and completely turned into meat meal without the slightest loss of protein. The guaranteed steam consumption amounts to only 1.3 lb. of steam per lb. of raw material.

In the Escher Wyss apparatus, the carcase material is cooked with steam under pressure and thereby sterilized, whereupon the fat is separated and the residue dried to form meat meal. The material is filled into a horizontal extractor containing a perforated drum strainer, which is turned

Digitized by Google

by means of a worm wheel gear. The material including the bones is reduced to a fine pulp by means of this drum strainer and under steam pressure and is then discharged into a fat separator.

Here the fat is extracted and led to a fat reservoir, whereupon the remaining pulpy material is forced back into the extractor by means of steam pressure in order to be dried to meal under vacuum. Thus a motor, line shafting and steam boiler of

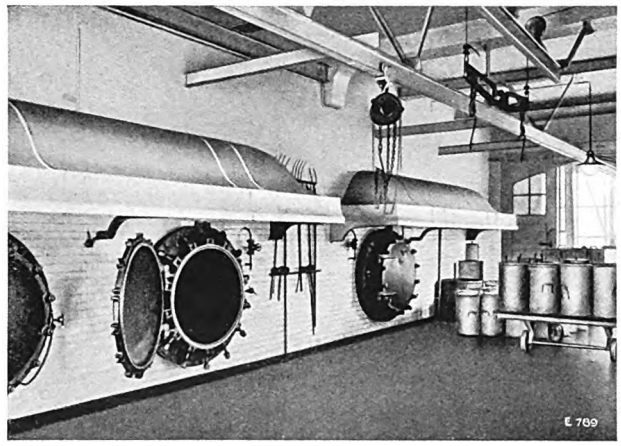

Fig. 1. Charging room of the Zurich plant

85 lbs./sq. in. pressure are also required to operate the plant.

The plants are laid out in such a manner that the charging room, to which the raw material is supplied, has no connection with the apparatus room in order to prevent a spreading of the disease germs.

Fig. 1 illustrates the charging room of the municipal plant in Zurich, and Fig. 2 the apparatus room of the municipal plant in Basle.

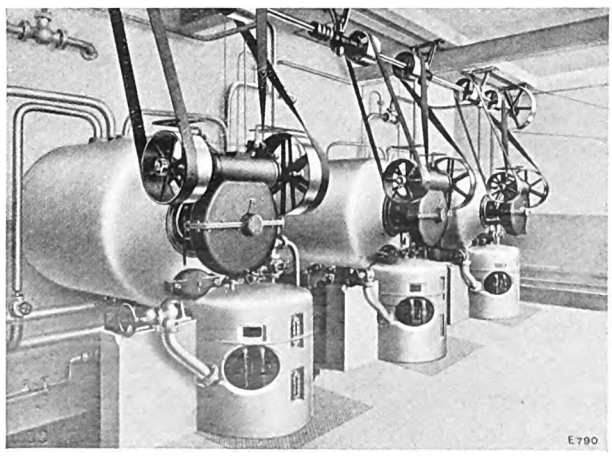

Fig. 2. Apparatus room of the Basle plant.

Each of the 3 groups of apparatus of Zurich and Basle has a capacity of 1¼ tons of carcase material, which is completely treated in about 7 to 8 hours. Messrs. Escher Wyss & Co. also supply this type of apparatus for a maximum capacity of 2.5 tons and have delivered 3 such apparatus to the municipal slaughter house in Milan.

The plant of the Dutch Thermochemical Works in Friesland, where the confiscated meat and carcases of Northern Holland are treated, receives as much as 40 tons of material per day and is thus the largest plant of its kind on the Continent. A special high capacity equipment was supplied by Messrs. Escher Wyss & Co.

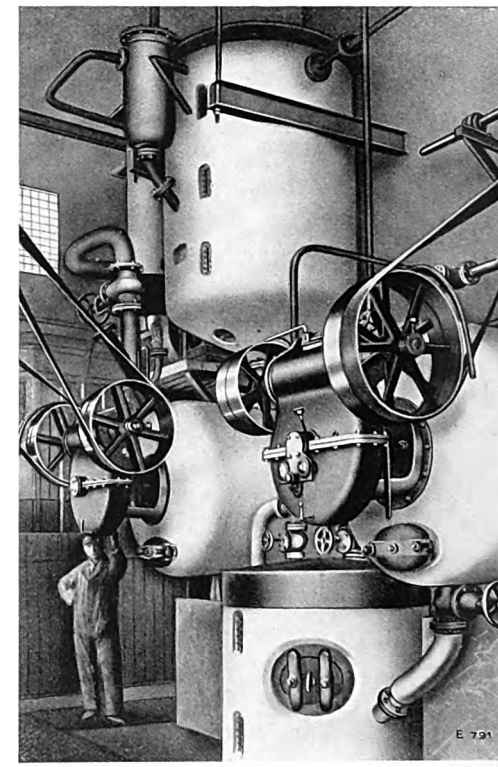

Fig. 3. Group of apparatus.

Fig. 3 illustrates a group of these apparatus, which treat 10 tons of carcase material in 16 hours and turn it into fat and meat meal without loss of protein. An additional installation for dealing with 25 tons in 24 hours has now been ordered.

Apart from these high-capacity apparatus, which are a technical novelty, Escher Wyss & Co. have designed apparatus permitting by means of a solvent of further separation of the fat from the meat meal recovered by the steam process, which still contains

Digitized by Google

12 to 18 per cent of fat, and thus renders the meal yet more valuable as foodstuff. Such a plant was erected and put into service in Basle.

This apparatus and more especially the high-capacity types, originally designed for the treatment of carcases, may now also be employed for handling fish offal, which is received in enormous quantities. A fish handling plant has already been supplied by Messrs. Escher Wyss & Co. to the Société Nouvelle des Pêcheries à Vapeur in Arcachon and a second plant is at the time being in course of construction for a concern in La Rochelle.

The new cheese depot of the Emmental A. G. in Lucerne.

By D. Mettler.

The new cheese depot of the well-known Emmental Company in Lucerne (St. Karli Bridge) in its totality presents features of interest, which are generally not encountered in such industrial establishments.

The agricultural building department in Brugg under the management of architect Hug was entrusted with the designing and execution of this undertaking and has succeeded in giving the whole building an external appearance, which is admirably

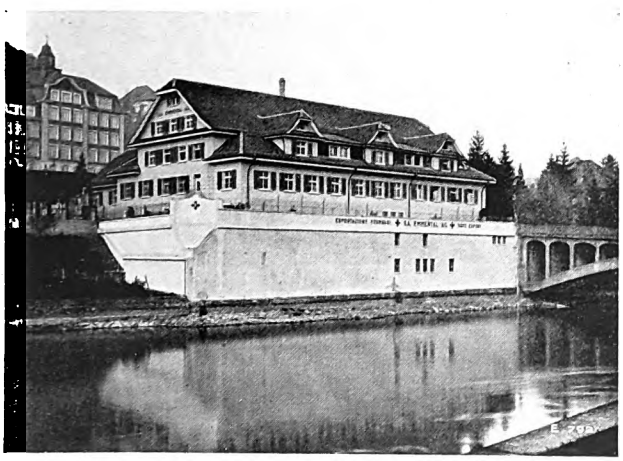

Fig. 1. View of the new cheese depot of the Emmental Company.

suited to the surroundings of the city on the River Reuss.

The question of locality also appears to have been advantageously solved inasmuch as the extensive cellars could be so arranged that weather conditions and temperature fluctuations have but little influence. To enhance this, the ceilings and walls of the storage building proper were provided with an insulating layer of cork up to 3½ ft. below the floor. The cheese storage cellars, as may be inferred from Fig. 1, lie underground, but on the broad side facing the River Reuss they extend overground throughout their whole height. The large, barren concrete wall with few windows approximately shows the height of the cellars, which, measured inside, amounts to 22 ft. throughout. The part of the building extending upwards over the cellars is reserved for the administration and dwellings.

The interior lay-out of the cellars, designed on quite novel lines, presents many features of interest. The available ground area of 7500 sq. ft. was divided into 10 separate compartments and a central passage. Fig. 2 illustrates this arrangement.

Cellars No. 1 and 2 are reserved for the storage of skimmed cheese, cellars No. 3 to 8 for rich cheese and cellars 9 and 10 for different kinds of cheese. Special attention was also paid to the inner equipment and its suitability to operate the plant. The central passage, whose position and general lay-out may be seen in Fig. 2, was subdivided twice horizontally. The two upper passages are connected with the lower passage by means of a modern, powerful electric goods lift and in addition by a normal staircase for people. All three passages are equipped with small suitable trucks for conveying the loads to and from the different cellars.

Digitized by Google

With exception of the double cellar No. 3, which is provided with 6 doors, each cellar has 3 lockable doors, one above the other opening on to the 3 passages. Therefore, there are 33 doors in all for the actual storage cellars. Excepting cellars Nos. 1, 5, 9 and 10, all rooms are clear throughout their height of 22 ft., i. e. they contain no subdivisions. The subdivision of the outer cellars was carried out simply to stabilize the building. Two rails in each cellar, on which a truck runs, lead to the 22 doors of the two upper passages. Fig. 3 shows one side of the double cellar No. 3, whilst Fig. 4 illustrates cellar No. 9 empty. Both illustrations clearly show the rails and trucks. At each door an ingenious automatic interlocking device is provided, which automatically opens when the truck arrives at the door and closes again when the truck leaves the door. Fig. 4 also gives a glimpse of the adjacent cellar No. 2 B. Fig. 5 illustrates the interior equipment of cellar No. 10, which will be described further on, and in the background the skimmed cheese cellar No. 1 A.

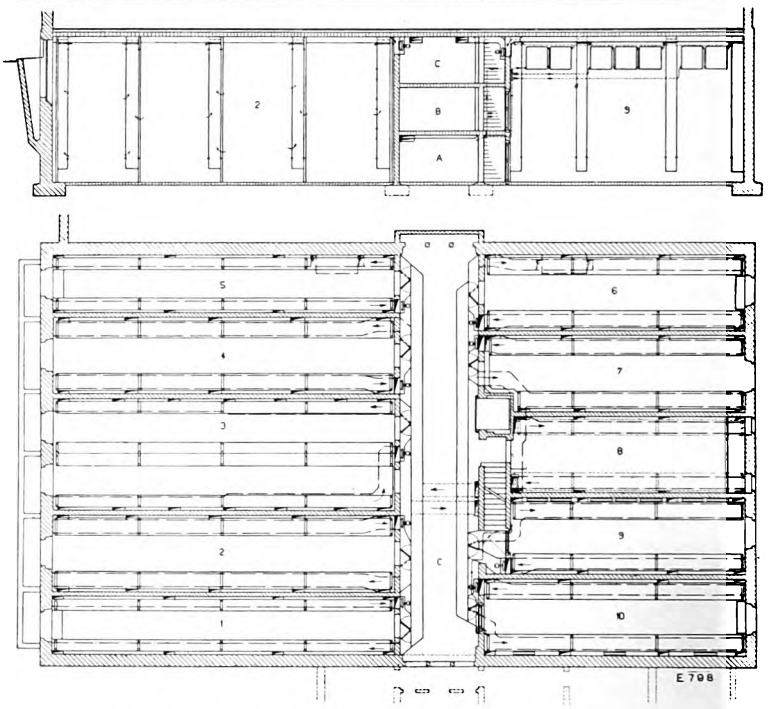

Fig. 2. Inner arrangement of the cheese depot of the Emmental Company.

The interior technical equipment also received due consideration. In view of the fact that a correct solution of the cooling and ventilating problems was of the utmost importance, the different ways and means to achieve this object were carefully studied and tested.

The ordinary technical problems were supplemented by another problem of considerable importance, which, however, had no bearing on the actual question of cheese preservation. In order to obtain from the local authorities permission, to erect the building, guarantees had to be given on the one hand that the whole neighbourhood would not be molested by cheese odours. On the other hand it is a well-known fact that an adequate system for the preservation of foodstuffs must operate in conjunction with a fresh air supply system. The odours developed when storing cheese are a natural consequence of the maturing process. Even perfectly matured cheese constantly emanates a certain amount of odoriferous substances, which are broadcast in the neighbourhood and may become a serious nuisance. It is, therefore, quite clear that air discharged from such cheese cellars may be most objectionable. With small plants this trouble may be neglected, but with larger plants it may cause very disagreable effects, which, however, are not dangerous to health. The odours in question are due to the development of volatile sebacic acid, which is produced in large quantities especially with skimmed cheese.

After a prolonged study of the questions involved and on the strength of the experience gained with existing plants of the Company, an equipment was proposed, which satisfied the following requirements:

1. Adequate ventilation and drying of all cellars by means of a central air cooler (to replace the total cubic volume of the cellars twice a day).
2. Irreproachable deodorization of the air discharged to atmosphere.
3. Artificial refrigeration of the storage cellars Nos. 9 and 10 to approx. 54 to 50° Fahr.
4. To maintain a moisture in the cellars of approx. 85 to 90 per cent.

The order for this mechanical equipment was given to Messrs. Escher Wyss & Co., who were in a position to submit a number of novel and interesting proposals, which would fulfil the requirements in the simplest manner.

In the following we publish a description of these interesting technical cooling and ventilating installations.

Digitized by Google

On first thought the fresh air ventilation plant appears to present no difficulties, but a closer study of the question soon discloses a number of points, which require due consideration. The fresh air from the atmosphere at all times of the year contains more or less moisture in the form of invisible vapour, according to the temperature and weather conditions. The temperature in the storage cellars, however, remains fairly constant, for long periods, whilst the outdoor temperatures are subject to considerable fluctuations during the course of the day. If now, for instance, warm, damp, fresh air is introduced into the cellars, it is cooled (if warmer) on the walls and the stored cheese and deposits the excess moisture in the form of water. The cheese, ceilings and walls become damp or even very wet and at times mildewy. From this it is clear that the air before being admitted to the cellars must be freed of its moisture, which is best done by cooling the fresh air. For this purpose an artificial air cooling plant was provided, which permits of cooling the air to a suitable temperature before it enters the cellars. Fig. 6 illustrates this plant diagrammatically.

The fresh air ventilating plant is designed for a capacity of 70 600 cub. ft. per hour. 317 700 cub. ft. of cooled fresh air may be admitted to the storage cellars daily. The temperature of the air was taken at 54° Fahr. with a mean moisture of 85 to 90 per cent. It was thereby assumed that the temperature in the cellars under the influence of ground radiation would be approx. 60° Fahr. For this reason it was considered quite superfluous to cool the cellars Nos. 1 to 9.

However, another item has to be considered. It is common knowledge that the temperatures in rooms not equipped with special appliances, measured at different places horizontally and vertically, show great differences. These differences are especially pronounced at different levels, and the higher a room, the more this disagreable phenomenon will be experienced, because the warm and specifically light air has the natural tendency to rise upwards, whilst the cold and specifically heavy air flows downwards. This disagreable condition was especially to be feared in the 22 ft. high cellars. On the other hand the air conditions for cheese storage must be practically the same in all parts of the cellar, at the top as well as at the bottom and at all intermediate levels. To achieve this, a separate air-circulating equipment was provided for each cellar,

Fig. 3. Double cellar No. 3.

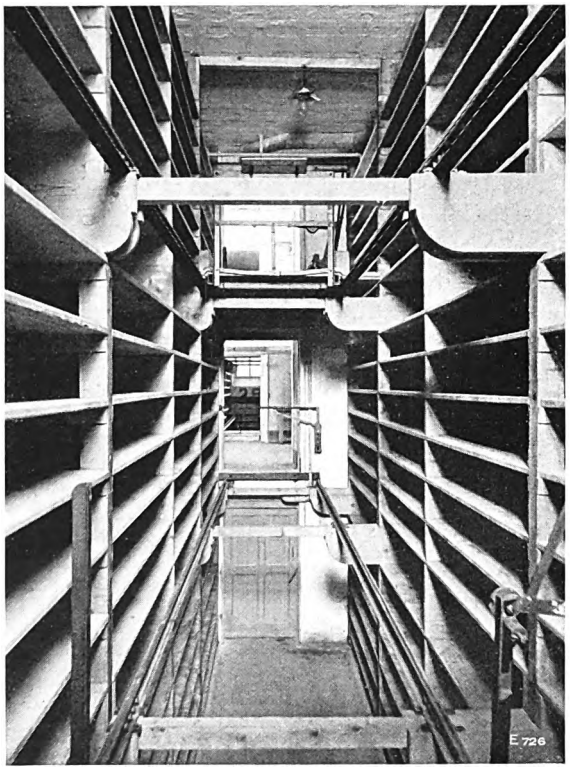

Fig. 4. Double cellar No. 9.

Digitized by Google

which has the duty of maintaining practically the same air temperature and moisture conditions at all levels of the individual cellars. These equipments are

Fig. 5. Interior equipment of cooling cellar No. 6.

calculated for a fivefold circulation of the air in the cellars per hour. The separation of the individual ventilation systems also more readily permits of the independent filling of the cellars with cheese. Since the cellar was subdivided into separate compartments, it was obviously quite logical to subdivide also the equipments accordingly.

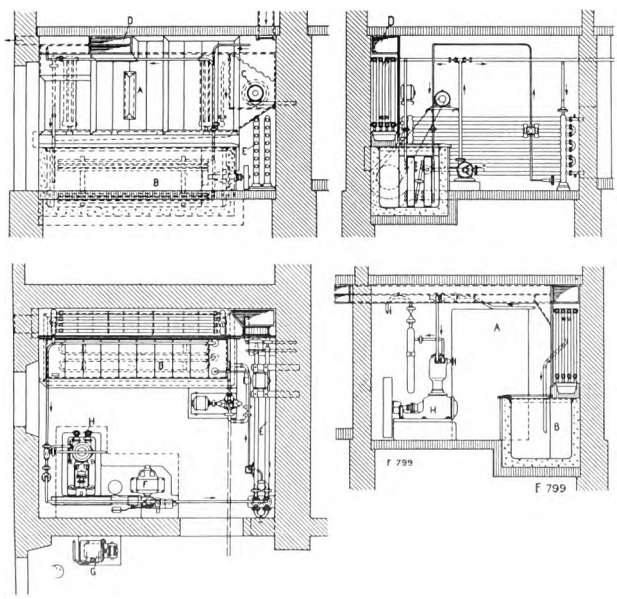

A Air cooler
B Evaporator
C Fan
D Suction channel
E Counterflow condenser
F Electric motor
G Ozone apparatus
H Compressor

Fig. 6. Diagram of the cooling machine plant

The horizontal distributing and collecting ducts of the air-circulating equipments, fitted to the ceilings, are provided with vertical branches reaching

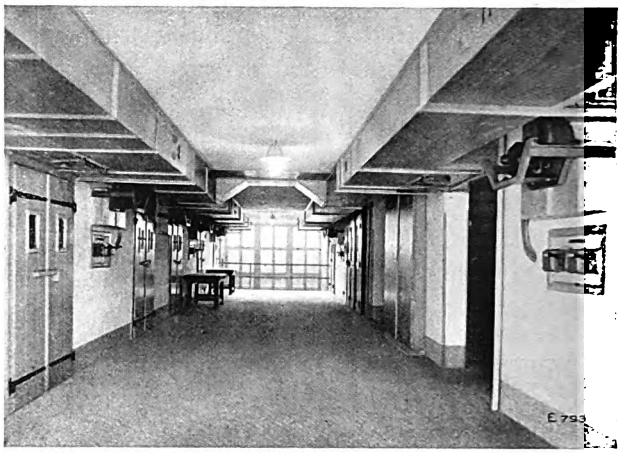

Fig. 7. Air-circulating equipment.

nearly to the floor. The control apparatus of the air-circulating equipments is situated in the uppermost passage. There are 10 such equipments in all, each of which may be separately kept in service, Fig. 7.

The fresh air and exhaust air ducts also terminate in the uppermost passage (see also the large longitudinal ducts in the plan, Fig. 2) and are arranged one above the other on both sides of the passage and connected with the air-circulating equipments in such a manner that by simply adjusting a lever the fresh air may be directed to any system of these equipments. The adjustment of the lever simultaneously opens the exhaust air channel so that a renewal of the air can really take place.

The deodorization of the cellar air is effected by means of an ozone apparatus. This is an electric high-tension apparatus in which part of the atmospheric oxygen is changed into ozone (O_3, three-atomic oxygen) by means of glow discharges. This three-atomic oxygen has the property of removing or binding all non-aromatic odours. Fig. 8 illustrates this ozone apparatus to the left of the door; it takes up very little room and is remarkably quick in its action.

The ozone apparatus is connected with the two main ventilating ducts by means of small pipes. A number of valves permit of effecting different combinations with the fresh air circulating equipments. The ozone apparatus extracts exhaust air from the

Digitized by Google

waste air duct and after exposure to the electrical discharges conducts it as ozonized air to the fresh air duct, which in turn carries it to the different

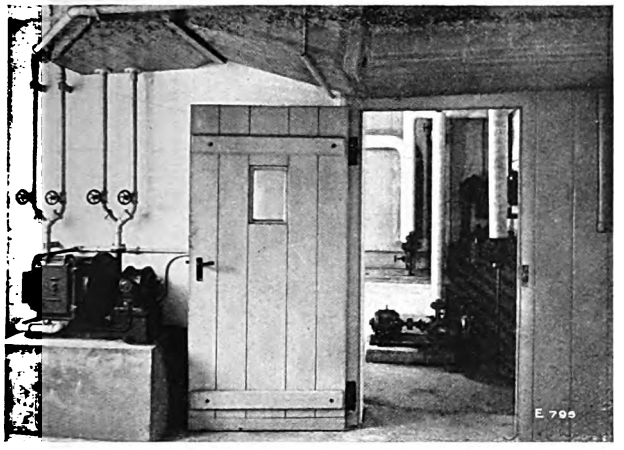

Fig. 8. Ozone apparatus.

cellars. After a relatively short time a considerable decline of the smell is perceptible.

The ozonisation apart from deodorizing the air also effects a general improvement of the air. The action of the ozone hampers the formation of mildew and rot; under favourable conditions this is even completely suppressed. It must be specially emphasized that the ozone neither affects the taste nor the quality of the cheese, as might be suspected.

The air cooler of the fresh air supply plant is connected with an Escher Wyss refrigerating plant, which is also visible in the plan, Fig. 6. This refrigerating plant is sufficient to also cool the cellars No. 9 and 10, in which a minimum temperature of 46° Fahr. may be maintained during the warm summer months. The ammonia system was chosen for the cooling plant. There was no special reason for doing this, and the carbonic acid system might just as well have been adopted.

The refrigerating plant proper consists of a single-cylinder plunger compressor of approx. 883 cub. ft. stroke volume per hour, corresponding to an hourly capacity of about 64 000 B. T. U. at an evaporation temperature of 32° Fahr. and a cooling water temperature of 60° Fahr., a duplex tube counterflow condenser and a brine cooler. All these apparatus are visible in Fig. 6. The electrically-driven ammonia compressor is shown in Fig. 9.

An electrically-driven centrifugal pump feeds the brine, cooled to about 41° Fahr., to the air cooler and the cooling systems of cellars No. 9 and 10. These cooling systems consist of individual cast-iron radiators of the type generally employed for heating purposes, which may be regulated. The air cooler proper is also built up of the same type of radiator elements. Cast-iron systems were chosen because they are less sensitive to the effects of the brine than wrought iron and steel.

Fig. 10 is a diagram of the air cooler, the cooling systems, the brine cooler and the connecting pipes.

Fig. 11 diagrammatically illustrates the refrigerating set with the connecting pipes.

Cellars Nos. 9 and 10 are provided with the above-described air-circulating and ventilating equipments besides the cooling systems.

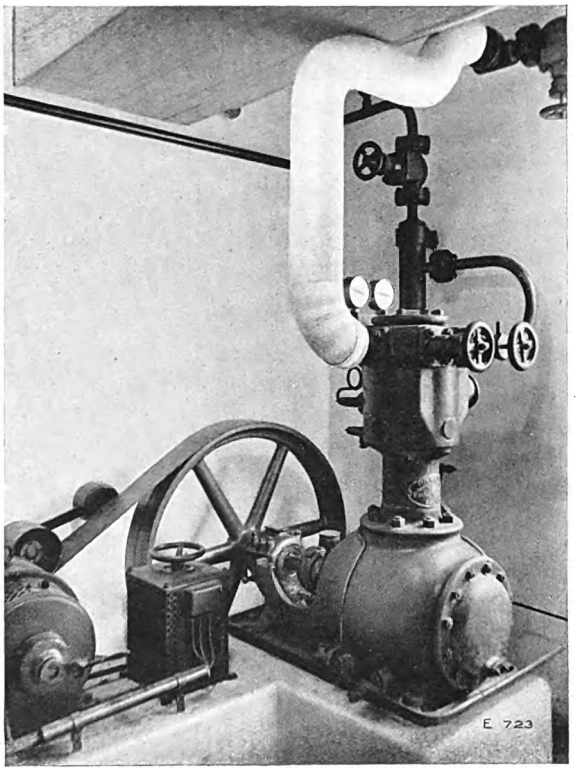

Fig. 9. Ammonia refrigerating machine.

The whole of the interior technical equipment is not tied up to a rigid system of control, because, as proved by practice the most suitable air and moisture conditions must be tried for each kind of cheese. Nevertheless, the ideal condition must be attempted to be reached by systematic and permanent control according to certain rules.

Digitized by Google

The complete installations are easy to handle in spite of the extensive equipments. However, the supervision should be entrusted to one person only,

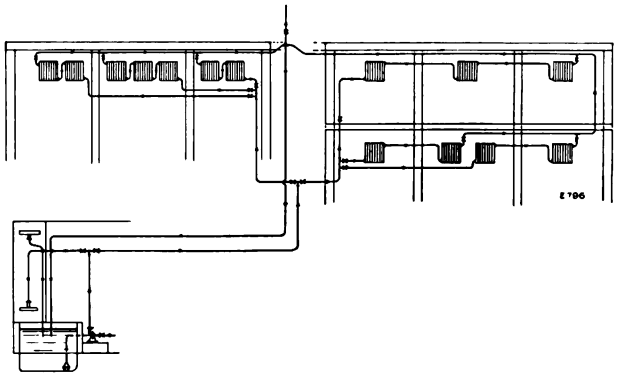

Fig. 10. Diagram of the air cooler, cooling systems, etc.

as otherwise incorrect manipulation might lead to faulty functioning of the plant.

The new cheese depot was put into service in 1926 to 1927. Stable conditions have not yet been reached because the walls of the cellars are not sufficiently free from moisture. However, the drying out process is progressing quickly and more satisfactorily than was expected.

All the above illustrations show at a glance what

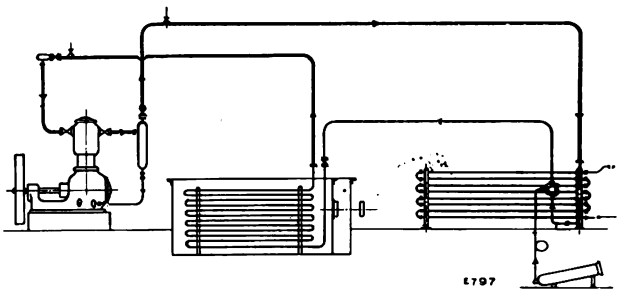

Fig. 11. Diagram of the refrigerating set.

care has been taken to employ the most appropriate apparatus. Nevertheless, the complete cooling and ventilating equipments are more of the nature of a test plant, whose results are not yet determined. The Swiss foodstuff industry, though smaller than that of larger countries, has long since conquered a place of honour and the instalment of such up-to-date plant as described above will undoubtedly enhance its importance.

Digitized by Google

The Zoelly marine turbine of the twin screw steamship "Nieuw Zeeland".

By B. Lendorff.

The steam turbine is used chiefly in connection with generators to transform the latent energy of coal into electric energy. Apart from this it is a suitable prime mover for ships of all descriptions. Nowadays the enormons power required by modern passenger steamers or battleships can hardly be coped with otherwise than by turbines since reciprocating engines for large outputs would be far too cumbersome and heavy.

The introduction of the steam turbine as prime mover for ships was initially fraught with considerable difficulties. The ships' propellers, according to the power transmitted, operate most economically at 80 to 200 r. p. m., paddle wheels at even a lower speed, viz. 40 to 50 r. p. m. In those days suitable means for reducing the speed were lacking so that the turbine designer had to revert to very low speed turbines, which were directly coupled with the propeller. Such turbines were naturally excessively large especially as regards the discs, which resulted in considerable windage losses. In addition, with a large number of stages the heights of the blades become comparatively small and the efficiencies were thereby reduced. To avoid the turbines being inefficient a high propeller speed had to be adopted and this again resulted in a bad efficiency of the propeller.

It follows that according to present day notions turbine-driven ships with direct drive operated very uneconomically and could only successfully compete with the reciprocating engine when very high outputs were concerned.

It was only after the problem of speed reducing gears had been solved in an adequate manner, that the economic superiority of the turbine even at small outputs was proved, so that nowadays geared turbines even at outputs of from 500 to 1000 HP are more economic than the reciprocating engine as far as steam consumption, weight and space requirements are concerned. The following is a description of marine turbines (Zoelly system), which were supplied to the «Koninglijke Paketvaart Maatschappy» in Amsterdam a short while ago.

The turbines in question serve as prime movers for a twin screw steamship of approx. 17 000 tons displacement, Fig. 1. The maximum speed was stipulated at 15½ nautical miles per hour. To attain this speed an output of 8000 shaft HP at a propeller

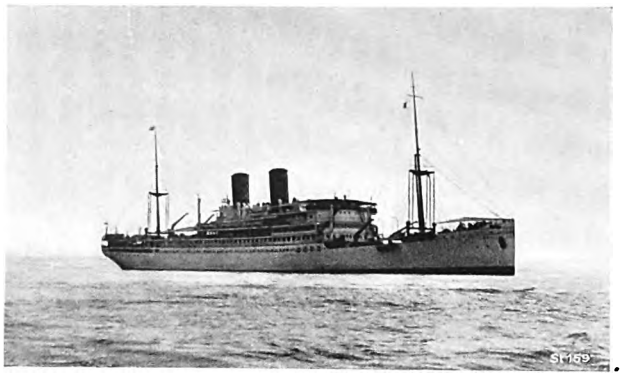

Fig. 1.

speed of about 115 revolutions is required.

The shipowners stipulated the following constructional and guarantee conditions:

Steam conditions at stop valve of turbine 250 lbs./sq. in. abs., 617° Fahr.

Back-pressure in exhaust steam branch 1 lb./sq. in. abs.

Normal output per shaft 3600 HP at a propeller speed of 110 r. p. m.

Maximum output per shaft 4000 HP at a propeller speed of 115 r. p. m.

Reverse speed 75 % of forward speed.

A steam consumption of 9.25 lbs. per shaft-horsepower at normal load and including the extraction

Digitized by Google

of 8.8 per cent of the live steam at 31 lbs./sq. in. for preheating the feed water was guaranteed.

The turbines of both shafts must work independently of one another. Therefore, two turbine sets,

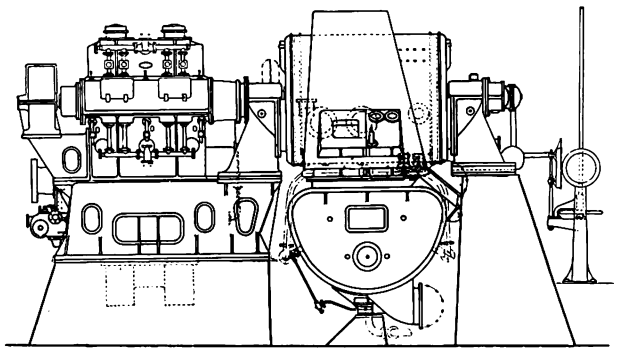

Fig. 2.

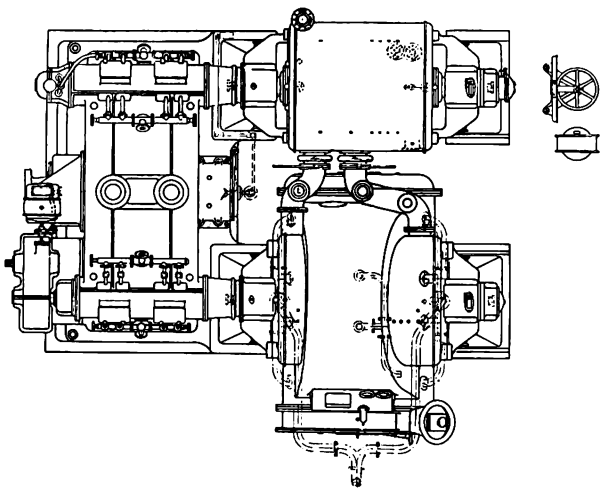

Fig. 4.

each of 4000 HP output, measured at the propeller shaft, and arranged symmetrically to the ship's axis, had to be provided.

Messrs. Escher Wyss & Co. submitted a number of proposals meeting these requirements, of which the shipowners accepted an arrangement with single reduction gear and two-casing turbines.

The choice of the single reduction gear limited the turbine speed to 2200 r. p. m. at normal load, since for constructional and practical reasons a higher gear ratio than 1 to 20 was not admissible.

Figs. 2 to 5 illustrate the turbines assembled with the reduction gear supplied by the firm of Krupp. The simple design of the set is at once apparent.

The turbines, flanged to the body of the bearing, are bolted on the one side to the bracket-shaped part of the gear casing, and on the other side are fixed by means of longitudinal wedges, and rest upon cast-iron foundation blocks so that axial expansion of the casing is possible.

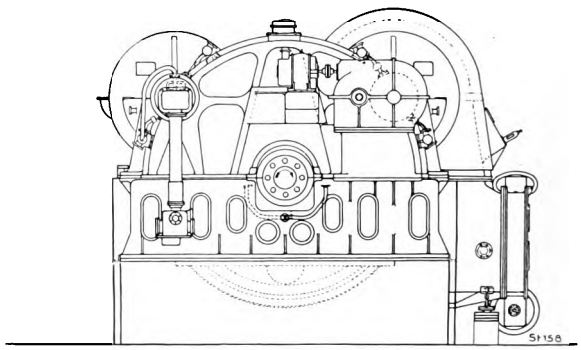

Fig. 3.

The foundation blocks and the gear casing are supported by ribs of the ship's hull.

Figs. 6 and 7 are sectional elevations of the high-pressure and low-pressure turbine.

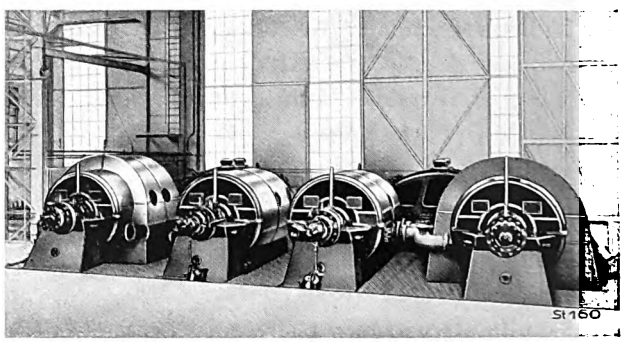

Fig. 5.

Both turbines have 9 impulse stages each for the ahead portions and 2 stages each for astern portions. The astern wheels are provided with a double blading in the high-pressure part, and a single impulse blading in the low-pressure part, similar to all the ahead wheels. Figs. 6 and 7 show the constructional design. The following details are worthy of mention:

The guide wheels of the first five high-pressure stages have very small channels. To reduce the friction losses in the channels to a minimum, the latter were milled from single steel blocks, which are placed in the T-shaped grooves of the guide wheel rim and of the intermediary bottom and then welded. This construction permits of most accurate machining of the side walls even with smallest

Digitized by Google

Digitized by Google

During the various trial trips the complete machinery of the «Nieuw Zeeland» was carefully tested and the turbine output determined from the torsion of the propeller shaft.

The steam consumption was ascertained firstly by measurements on the turbine, secondly, by means of a recording Venturi meter and finally checked by metering the quantity of feed water used.

In order to draw up a heat balance of the whole plant, measurements were made at approx. 100 points and at different speeds of the ship, which proved the steam consumption figures of the turbines in a conclusive manner.

The appended table contains the values determined for three different outputs.

The figures prove that the guaranteed steam consumption was considerably higher than the actual consumption in spite of the fact that the steam temperature before the turbine was only 580° Fahr. instead of 617° Fahr.

The calculation of the results obtained during the trial trips on the basis of the guarantee values mentioned on page 159, including the steam extraction for feed water heating, resulted in a steam consumption of 8.9 lbs. per shaft-horsepower-hour, i. e. a reduction of the guarantee figures by approx. 4 per cent.

The introduction of high-speed turbines on the one hand and the superheating and increased pressure of the steam on the other are responsible for the fact that the steam consumption of modern ships' turbines has been reduced by 30 to 50 per cent compared with the former directly coupled machines. The economy of turbine-driven ships will in future be considerably increased — as in land plants — by the further increase of the steam pressure (710 to 1420 lbs./sq. in.) and of the steam temperature (750° Fahr.).

Output at shaft (starboard)	1 670	3 345	3 880	shaft HP.
Steam consumption of starboard turbines . . .	16 940	31 020	35 090	lbs./hr.
ditto	10.01	9.27	9.03	lbs./shaft-HP/hr.
Steam conditions at stop valve:				
Pressure	122	222	253	lbs./sq. in. abs.
Temperature	558	554	580	° Fahr.
Extraction for feed water heating, % of live steam	0	7.8	8.8	%
Extraction pressure	—	32.5	36.5	lbs./sq. in. abs.
Vacuum in condenser	1.15	1.67	1.73	"Hg. abs.
Vacuum in exhaust branch	1.44	1.97	2.02	"Hg. abs.

Digitized by Google

The Zoelly steam turbo-locomotive.

By H. Nyffenegger.

(Continuation 2.)

V. The Zoelly turbo-locomotive as built by Messrs. Escher Wyss & Co.

The first turbo-locomotive of Zoelly design originated from a Swiss 1 C piston locomotive retaining the boiler, frame and wheel sets. The wet steam boiler was equipped with a superheater and the front Bissel axle substituted by a bogie truck, serving as support for the turbine and gear lying transversely to the longitudinal axis of the locomotive, Figs. 19, 20 and 21. The accomodation of the turbine at the front end of the locomotive and the first allocation of the condenser between the longitudinal frame necessitated a considerable raising of the boiler, Fig. 9.

The six-stage Zoelly turbine, Fig. 21, is designed for a normal speed of 6500 r. p. m. corresponding to a travelling speed of 40 miles an hour and develops 1000 HP. The runner wheel diameter is 24". The 2-stage turbine for backward travel is contained in the same casing as the turbine for forward travel. The discs and shaft are machined from one solid forging, which ensures the utmost reliability in service and durability.

The double reduction gear 7 to 1 and 4 to 1 with Maag spur wheel toothing is provided with case-hardened ground pinions and counter-shaft wheels with steel shroudings; the teeth of the wheels are planed but not hardened. The large gear wheel is overhung on the intermediate shaft outside of the right hand longitudinal beam, and the right hand crank pin is rigidly set in this wheel, whilst the left hand side of the locomotive is driven by a crank pressed on the intermediate shaft, Fig. 21. Thus the power transmission is unsymmetrical. The turbine and gear are supported in a cast-steel frame, firmly bolted to the main frame. The bearings of the high-speed shafts are supplied with oil from a toothed wheel oil pump coupled with the gear, and the warm oil is recooled with water in a heat exchanger. A small auxiliary reciprocating pump supplies oil to the bearings before starting.

The locomotive has undergone some changes, which were deemed necessary according to the experience gained in service; however, these alterations did not affect the fundamental system of the Zoelly locomotive.

The condenser originally situated between the frame underneath the boiler was inaccessible for cleaning and, therefore, substituted by two condensers lying on the platform at the side of the boiler.

The forced draught furnace had not proved satisfactory. Although it requires only about one half the power owing to the smaller volume of cold air conveyed as compared with the induced draught furnace (hot waste gases), yet it is considerably

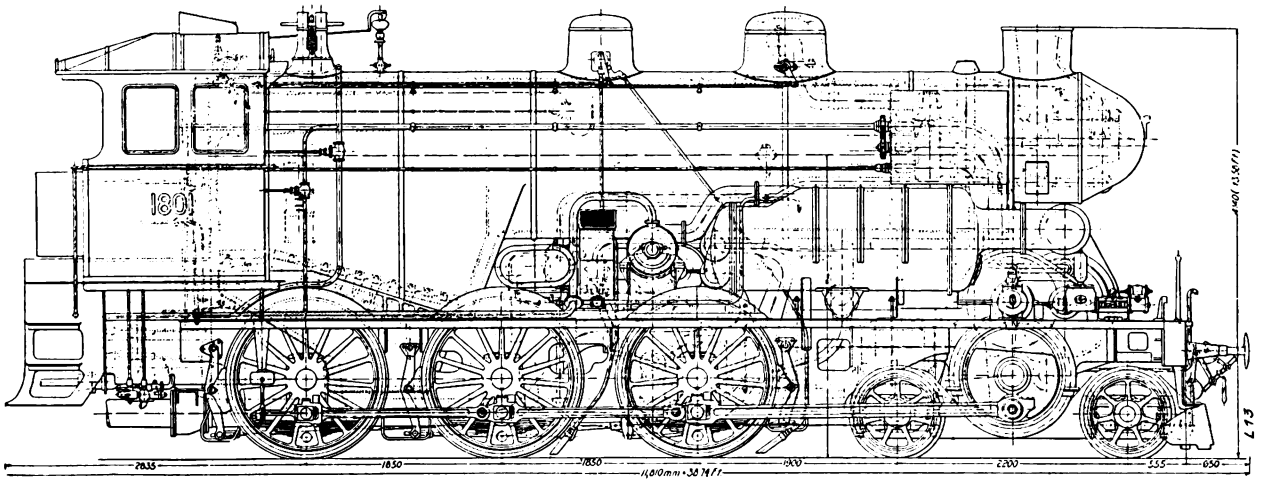

Fig. 19. Zoelly-turbo-locomotive, Escher Wyss design.

Digitized by Google

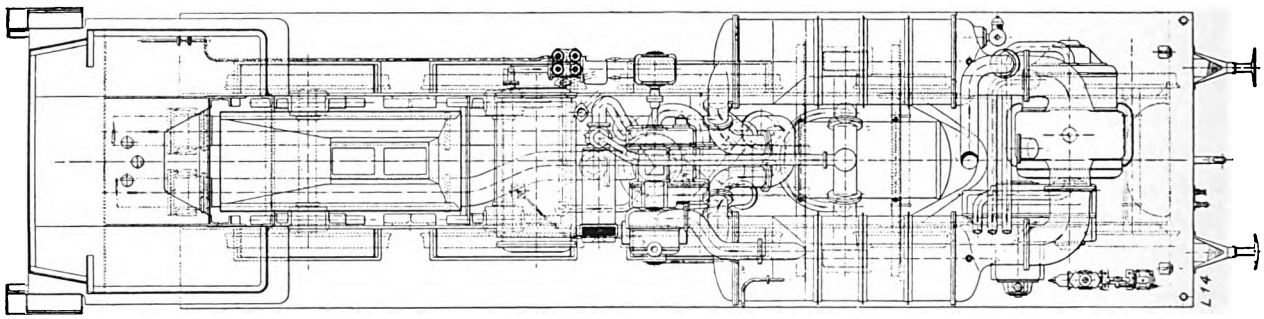

Fig. 20. Zoelly turbo-locomotive, Escher Wyss design.

inferior to the latter. At every charging of the hand-fired grate, the forced draught blower must be stopped in order to prevent the flame flashing out of the furnace door. This interruption of the draught is not conducive to a good steam production and, therefore, the forced draught furnace was replaced by an induced draught furnace. The fan situated underneath the boiler in the immediate vicinity of the grate was removed and fixed to the door of the smoke box and may be swung out so that the accessibility to the latter is not affected.

The single-stage condensate and feed water plunger pump and the rotary valve air pump for the condenser originally provided gave rise to trouble, which was eliminated by redesigning the whole pump set. Fig. 22 illustrates the ultimate arrangement of the pump set. A three-stage auxiliary turbine with horizontal shaft drives the vertical pump shaft through a reduction gear and bevel wheel gear. The centrifugal condensate extraction pump is situated at the bottom end of this shaft and supplies the feed water to a low-speed plunger pump, which in turn forces the feed water through an exhaust steam preheater to the boiler. The circulating water pump impeller wheel situated at the top of the pump shaft is connected with the tender collecting tank for the recooled water by means of a suction pipe, whilst the two condensers and the warm water distributing pipes of the cooler are arranged in the pressure piping. The two pipelines are provided with longitudinally flexible ball and socket joints between the locomotive and tender. The water evaporating in the cooler is replenished from the tender make-up tank and a float maintains a certain water level in the collecting tank. The pump wheel keyed on the centre of the pump shaft draws the water for the water jet air pump from the cooling water pressure pipe so that the rotary piston air pump, which is far too sensitive for these service conditions, has been replaced by a most simple and reliable contrivance. This new pump set has given every satisfaction and requires no attendance in service.

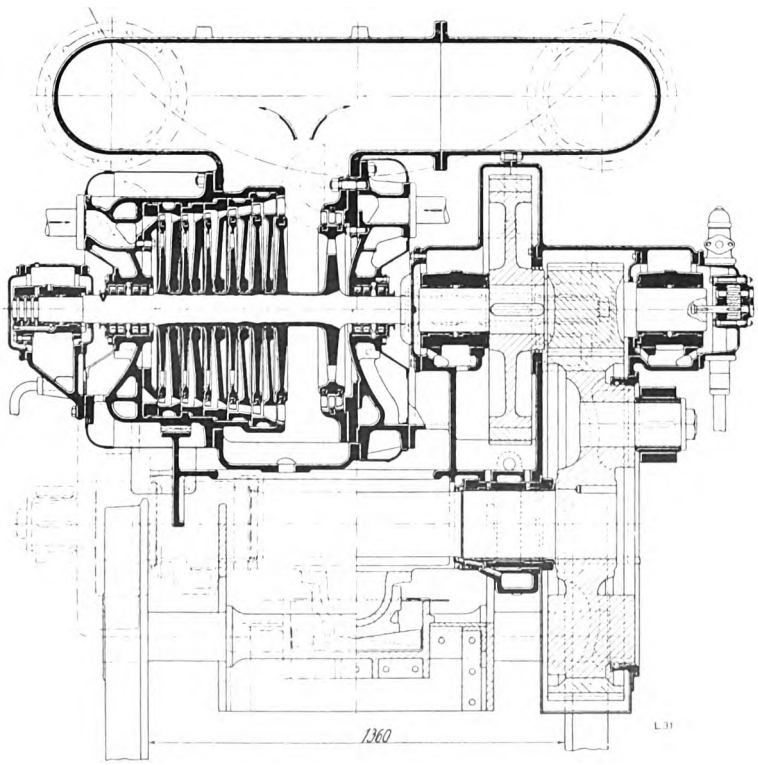

Fig. 21. Escher Wyss locomotive. Turbine and gear.

When reconstructing the cross-current spray cooler, Fig. 9, to a sprinkler cooler, Fig. 12, the utmost utilization of the travelling draught was aimed at. The longitudinally arranged cooling cells were ventilated by a spiral fan of well-known design with slanting driving shaft. This fan was, however, soon replaced by a Betz propeller with which excellent results were obtained. The reconstruction of the tender was a considerable step in the right direction.

Digitized by Google

The auxiliary turbines have runner wheel diameters of from 10.8″ to 12″ and drive the pumps and fans at 6 to 9000 r.p.m. through reduction gears. The cooler-fan turbine and the pump turbine are connected in series with the condenser, whilst the furnace-fan turbine, as back-pressure turbine, gives off its steam to the feed water preheater. In this manner the principles of good heat economy were fully satisfied, although in this first trial locomotive the auxiliary turbines were not run with superheated steam for the sake of simplicity.

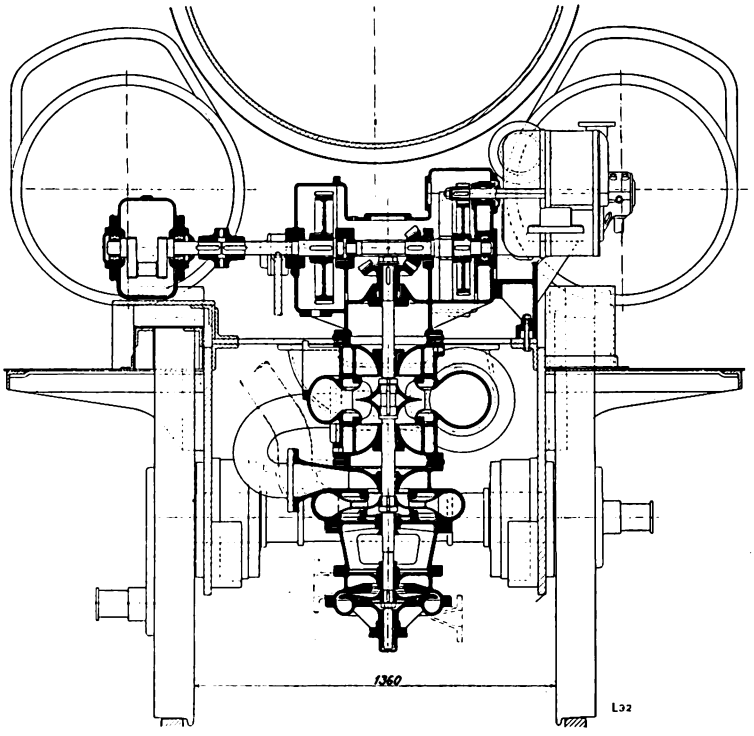

Fig. 22. Escher Wyss locomotive. Pump set.

VI. The Zoelly turbo-locomotive as built by Krupp.

The firm of Krupp as licensee of Dr. Zoelly has accepted the general design of the Swiss locomotive for its turbo-locomotive and the experience gained with the former could be utilized to a large extent for the design of the latter. As the Krupp locomotive has double the output of the Escher Wyss locomotive, viz. 2000 HP, the width of the teeth of the reduction gear lying between the frame had to be considerably increased. The turbines for forward and backward travel had also to be arranged in separate casings at both sides of the gear, Fig. 24. The rotors for forward and backward travel are each machined from a solid forging and coupled with the shaft of the duplex pinion by means of a tapered sleeve coupling. The six-stage rotor for forward travel has a runner wheel diameter of 26″ and at the normal speed of 53 miles an hour performs 6800 revolutions per minute. A lower economy may be accepted for backward travel and consequently this turbine has only three stages of 26″ diameter. To reduce the windage losses of the backward travel turbine, which at forward travel

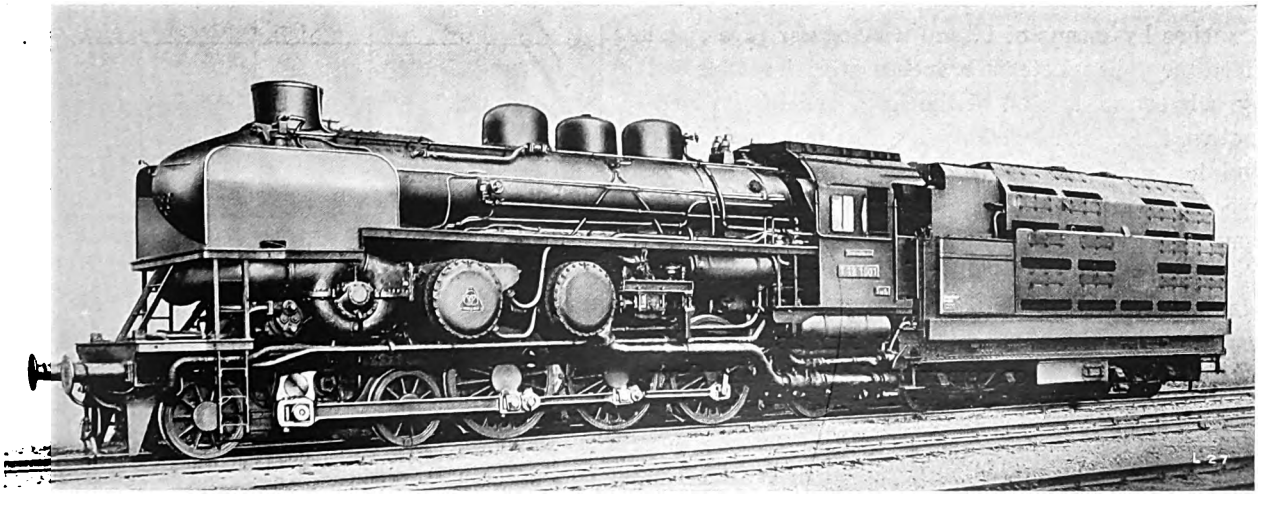

Fig. 23. View of the Zoelly turbo-locomotive, Krupp design.

Digitized by Google

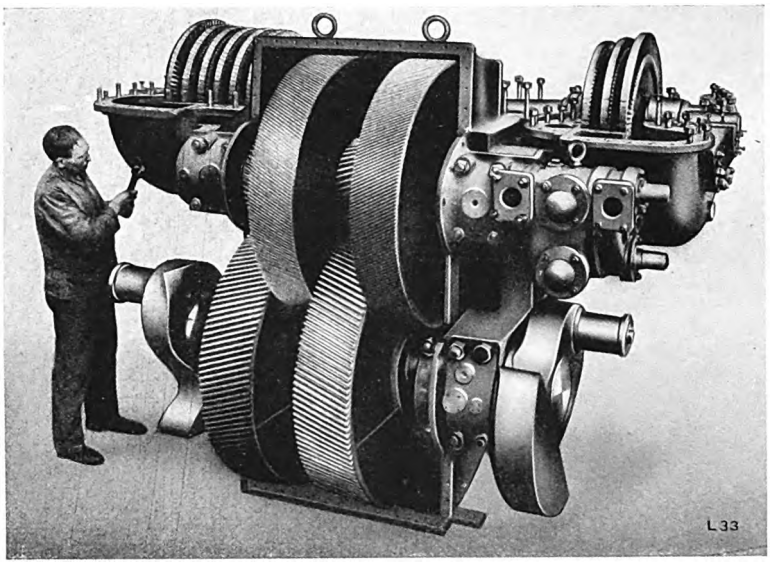

Fig. 24. Gear of the Krupp locomotive.

of the locomotive runs light in the vacuum, the last row of blades may be closed by automatically acting flaps. Fig. 25 shows the curves for draw-bar pull and output for 3 different quantities of steam.

The turbine casings are bolted on to the gear box, which in turn is supported in prismatic guides on the main frame and is bolted to the latter by means of a strong bolt on each side. The boiler support and gear box are bolted together at the level of the pinion shaft. The gear of Krupp design has helical teeth. The pinion and teeth of the wheels are made of hardened steel. The main turbine shaft is not provided with a thrust bearing, the axial thrust being balanced by the helical teeth themselves.

The two cylindrical surface condensers lie transversely to the boiler immediately behind the smoke box-boiler support, see Fig. 26. The foremost condenser is connected with the two exhaust steam branches by means of lateral rectangular pipes, and since the exhaust steam branches are interconnected by a byepass situated at the front end of the locomotive, the exhaust steam may flow in part directly and in part indirectly past the rotor of the non-operating turbine into the foremost condenser. This condenser receives the coldest cooling water and the steam, which is not condensed in it, passes into the rear condenser provided with the suction branch for the water jet air pump. The bundles of cooling tubes are accessible on removing the water chambers serving as covers. The ferrules at both ends allow of a quick replacement of each condenser tube.

The pump set is driven by an auxiliary turbine operating with live steam and exhausting into the condenser. This set comprises the cooling water circulating pump, which simultaneously supplies water to the water jet air pump of «Müller» design, the air compressor for the brakes and the feed water pump. The latter is a differential plunger pump with admission ports on the large side of the plunger. The condensate is drawn from a collecting vessel and forced to the boiler passing first through the exhaust steam feed water tank and secondly through the waste gas feed water tank.

Owing to the eccentric position of the bogie truck pin and the considerable load on the bogie truck, the furnace fan was originally not arranged in the smoke box door, the induced draught set

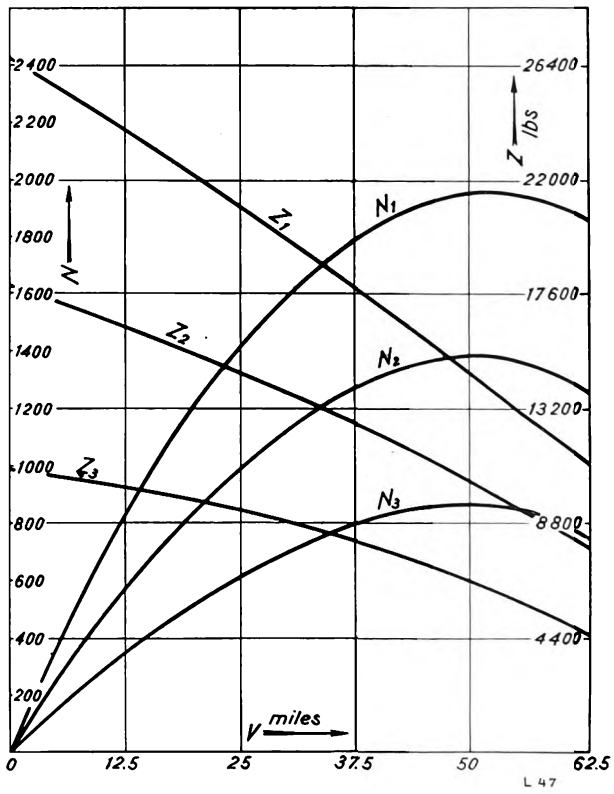

Fig. 25 Output diagram of the Krupp locomotive.
Draw bar pull Z_1 in lbs. and output N_1 in HP at 8800 lbs. of steam per hour
" Z_2 " " N_2 " 13200 " "
" Z_3 " " N_3 " 17600 " "

being placed underneath the boiler. This, however, led to complicated and long flue gas channels impeding the accessibility.

The smoke box was subdivided into a suction chamber and a pressure chamber by an intermediate

Digitized by Google

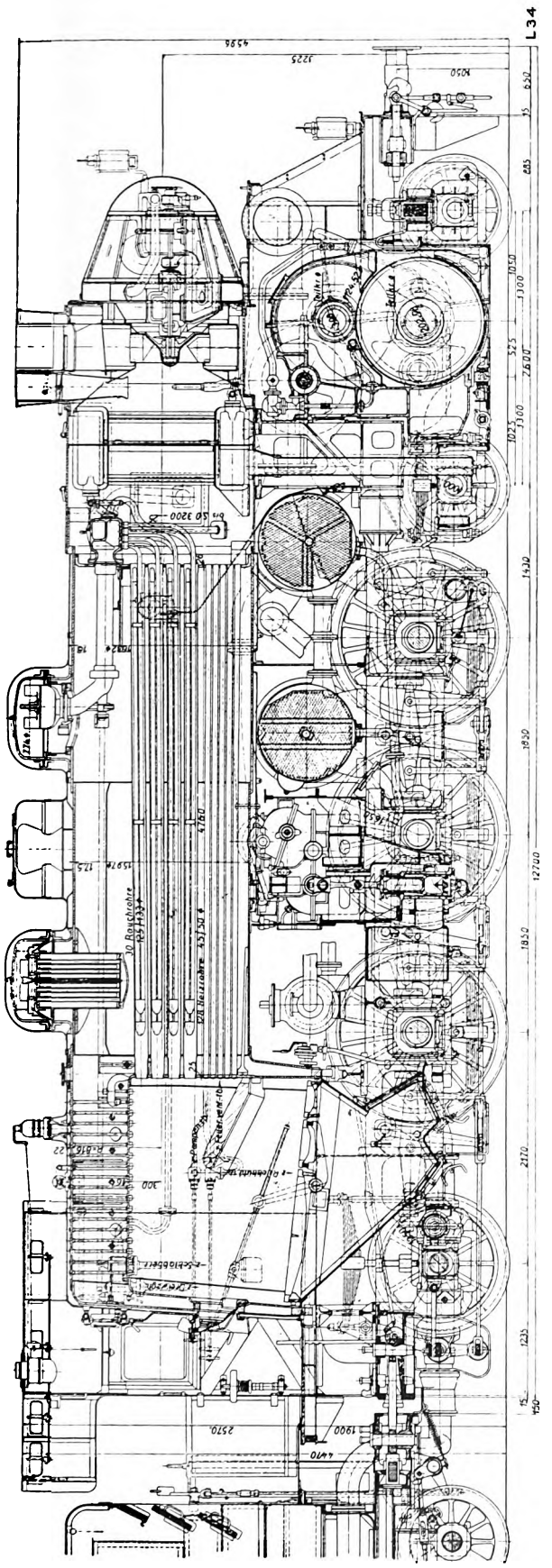

Fig. 26. Sectional elevation of the Zoelly turbo-locomotive of Krupp design.

double door. Later on, however, the approved arrangement of the Escher Wyss locomotive was adopted. The water tubes were shortened by 16″ in order to compensate the weight. The waste gas feed water preheater, formerly placed in the suction channel, is now arranged in coils in the considerably extended smoke box. It is worthy of special mention that the induced draught fan unit is fixed to the smoke box door and can be swung out without disconnecting any steam pipes.

The fan turbine is connected up in the same manner as the pump turbine. The cooler-fan turbine operates as back-pressure turbine and exhausts to the exhaust steam feed water preheater.

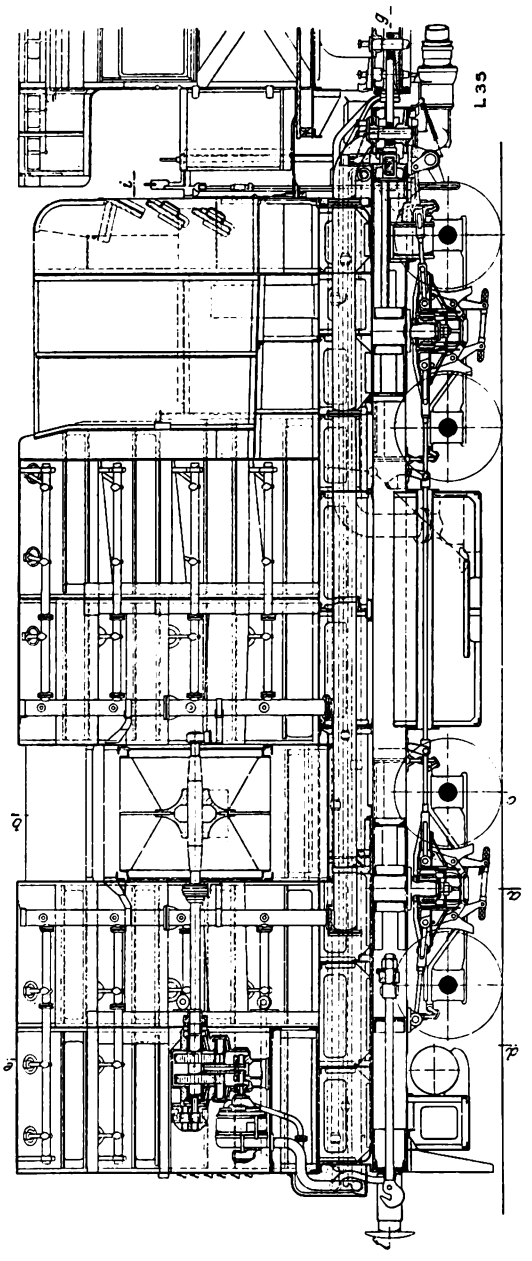

Fig 27. Sectional elevation of the Krupp cooling tender.

Digitized by Google

Contrary to the Swiss locomotive, also the auxiliary machines are supplied with superheated steam and for this purpose the Schmidt smoke tube superheater is divided into a larger part for the main turbine and a smaller part for the auxiliary turbines.

As the whole of the feed water is in constant circulation, only the losses due to the blowing off of the boiler safety valves and the stuffing box losses have to be replenished from the fresh water tank on the tender. The make-up fresh water is prepared for the boiler feed in an evaporator situated in the rear steam dome, so that all deposits are kept away from the boiler heating surface, rendering flushing of the boiler quite superfluous.

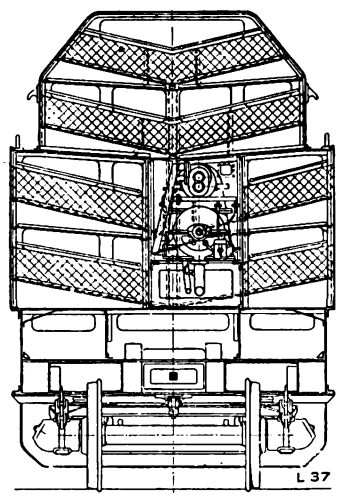

Fig. 28. Cross section of Krupp cooling tender.

The evaporator is of such dimensions that it can supply the steam for heating the train in winter.

The valves of the two nozzle groups of the forward travel turbine and the valve for the backward travel turbine are operated by means of cams driven by a control spindle. The usual governor serves as main cut-off and the manœuvring of the control gear and regulation of the output is precisely the same as with reciprocating engines.

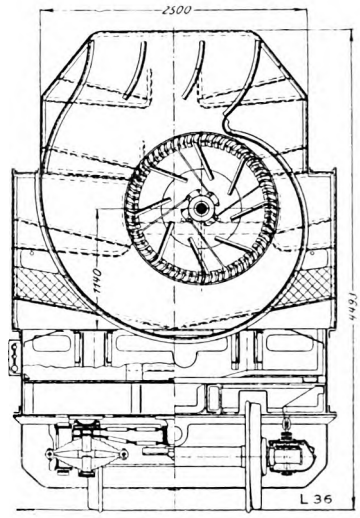

Fig. 29. Cross section of Krupp cooling tender.

The cooling cells of the Krupp cooling tender, Figs. 27, 28 and 29, are arranged transversely and a duplex centrifugal fan draws the air through the sides of the tender and the «Raschig» ring layers. The exhaust air is discharged through the roof of the tender. The store of coal may be easily reached by the stoker.

The following Table 2 contains the principal data of the two Zoelly turbo-locomotives:

Table 2.

	Escher Wyss-Locomotive		Krupp-Locomotive	
Driving wheel diameter	64″		65″	
Crank circle diameter	26″		25″	
Boiler pressure	198	lbs/sq.in.	213	lbs/sq.in.
Superheating	662	°Fahr.	662	°Fahr.
Heating surface of fire box	132	sq. ft.	134	sq. ft.
Heating surface in contact with water	1139	sq. ft.	1733	sq. ft.
Heating surface of superheater	405	sq. ft.	706	sq. ft.
Grate area	25	sq. ft.	33	sq. ft.
Dead weight of locomotive	60	tons	103	tons
Service weight of locomotive	65	tons	112.4	tons
Adhesion weight	45.6	tons	60	tons
Maximum speed	47	miles/hr.	63	miles/hr.
Dead weight of tender	21.5	tons	39.7	tons
Service weight of tender	39.5	tons	67.5	tons

(To be continued.)

Publishers: Escher Wyss & Co., Zurich (Switzerland).
Printed by: Siegfried & Co., Zurich (Switzerland).
London Office: Escher Wyss & Co., 20 Grosvenor Gardens, Westminster, London S. W. 1.
Tokyo Office: Escher Wyss & Co., Marunouchi Building, Room 322, Tokyo.

Digitized by Google

Ja 8'31 V

ESCHER WYSS NEWS

Volume I

6

November 1928

Published by Escher Wyss & Co. S A.

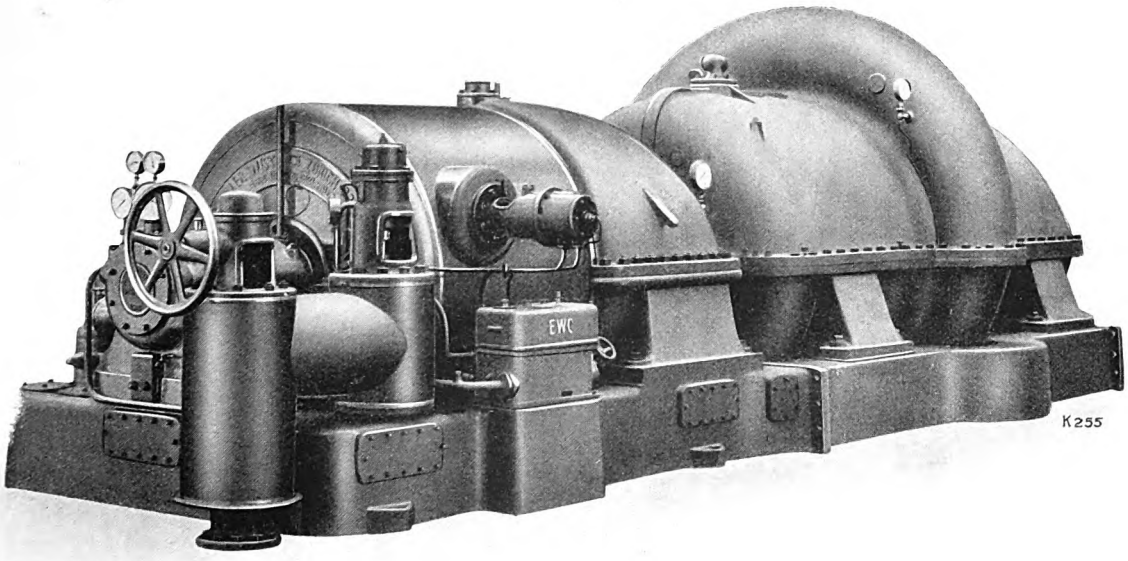

Blast furnace turbo-blower.
Supplied to Messrs. The Tata Iron & Steel Co. Ltd. Jamshedpore, India.
Equipped with precision regulator for constant inhaled volume. Capacity 55100 to 65250 cub. ft per minute inhaled volume; output of the steam turbine 4500 to 7100 HP; pressure 20 to 32 lbs/sq. in.; speed 2800 to 3200 r. p. m.

Contents

	Page
1. Experimental methods for ascertaining potential flow diagrams	171
2. Appendix	174
3. Hydraulic considerations for the lay-out of pipelines and the erection of surge tanks	176
4. Geared vertical water turbines for small and medium outputs	181
5. Automatic drainage plants	188
6. Small refrigerators	192
7. Miscellaneous	201

AGENTS FOR UNITED STATES
THE NATIONAL POWER MACHINERY CORP.
2912 CHANIN BLDG., NEW YORK

Digitized by Google

Digitized by Google

ESCHER WYSS NEWS

PUBLISHED BY MESSRS. ESCHER WYSS & Co. S. A.

VOLUME I — No. 6 — NOVEMBER 1928

The "Escher Wyss News" will be published periodically in bi-monthly issues. Reprinting of articles or illustrations appearing therein will only be permitted when source thereof is duly acknowledged. Single numbers 1/-; one year's subscription 5/-.

Experimental methods for ascertaining potential flow diagrams.

Communicated by our own hydraulic laboratory.

By H. Gerber.

The eddyless flow, or potential flow, of frictionless liquids is primarily only of theoretical interest, as it is not possible by any means to decide whether the shapes of the bodies adopted through which or past which the liquid flows are «suitable», without taking friction into consideration. The word «eddyless» must in this connection not be taken to be synonymous with «free of loss».

Yet potential flow is of the utmost practical importance, for two reasons, viz: firstly there are actually cases where the actual flow very closely approaches the potential flow. That is the case when the cross-sections converge in the direction of the flow, for instance in nozzles, guide apparatus, or in the blades of reaction turbines. The second reason is incident to the fact that the main deviation from potential flow is in reality caused by a parting of the liquid from the walls. This is nearly always combined with losses, which may be avoided only by the use of slender forms, moderate bends, etc. and thereby contraction is prevented. Under these conditions potential flow will coincide in a high degree with reality. From this we may deduce that not every conceivable potential flow is realizable; the flow in «well» shaped channels, etc. is in a high measure a potential flow, and a closer investigation is, therefore, of interest.

The mathematical treatment of the problem is in most cases exceedingly complicated. Such calculations can only be made within a reasonable space of time for two-dimensional problems, infinite number of blades and other very material simplifications, and, therefore, the establishment of experimental methods, which may be easily carried out, is advisable.

The method described hereunder is not new in principle; what strikes us, however, is the extreme simplicity and cheapness of the equipment, which nevertheless gives very excellent results, and permits of investigating not only two-dimensional but also three-dimensional problems. The method is based on the analogy between electric flow and eddyless flow of water. The hydraulic problem is, therefore, replaced by an electric one. It is well-known that the flow diagram of potential flow is identical with the flow line diagram of the field of an electric current, which is formed in the same space, between corresponding limiting conditions.

The direct determination of these electric flow lines will generally be fraught with difficulties. It is a far simpler matter to determine the equipotential lines in such an electric flow field, which, as is known, cut the flow lines at right angles. When, therefore, the equipotential lines are determined, the flow lines result as orthogonal trajectories of same, and the hydraulic problem of ascertaining the potential flow line diagrams is thereby reduced to the problem of determining the equipotential lines of an electric current field.

The testing equipment.

In practice it will be found necessary in many cases to investigate the flow in rotary hollow spaces and, therefore, we publish hereunder the description of a test equipment, which, for instance, may be employed for the investigation of the meridional flow in turbines. A sector is cut out of the hollow

Digitized by Google

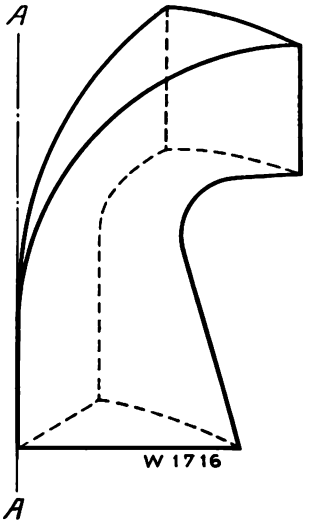

Fig. 1. Sketch of a wooden model.

space by means of two meridional planes and a wooden pattern made. A mould is then made in paraffin wax in a wooden box, in such a manner that one meridional section lies horizontally. Fig. 1 illustrates such a pattern of a Francis turbine profile.

If this paraffin mould be filled with an electrolyte (ordinary well water answers the purpose), then the surface of the liquid exactly corresponds to a meridional section. If a salt solution be used, care must be taken that its degree of concentration is everywhere the same. The end surfaces of the hollow form, corresponding to the inlet and outlet surfaces of the turbine, are fitted with a pole plate of copper sheet of 0.04″ thickness.

The measuring channel serving as potentiometer, Fig. 2, consists of a cement channel of

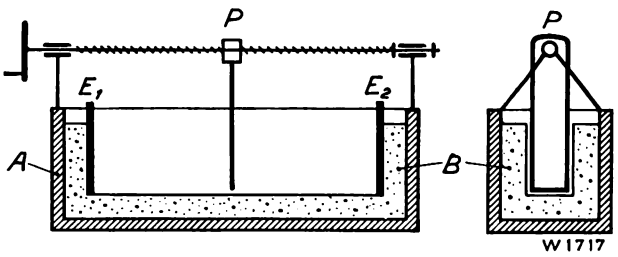

Fig. 2. Potentiometer or measuring channel.

P Movable pol plate
E_1 and E_2 Fixed pole plates
A Wooden box
B Cement

constant rectangular cross-section, insulated with Inertol, and likewise equipped with two pole plates E_1 and E_2.

Standard alternating current of 250 volts pressure and 50 cycles may be employed as source of current. This frequency produces a low, audible, buzzing tone in the telephone. Another source of

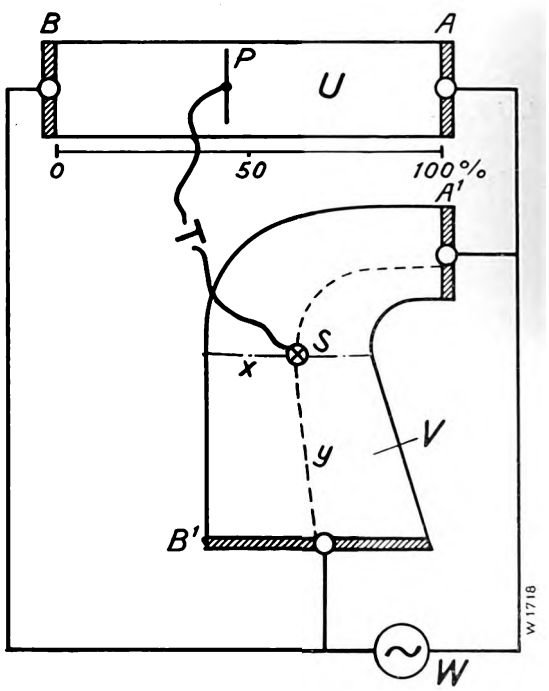

Fig. 3. Diagram of connections.

U Measuring channel
V Paraffin mould
W Source of current
S Detector
x Equipotential line
y Flow line
T Telephone

current may be provided by using an accumulator and a small induction apparatus. Owing to the higher frequency of the circuit breaker, the tone is somewhat higher. The connections are made on the principle of the Wheatstone bridge, as shown in Fig. 3, the measuring channel and the hollow space to be investigated being connected in parallel. The neutral wire connecting the movable pole plate P of the measuring channel U with the detector S is provided with an ordinary wireless head microphone of 4000 ohms resistance. This microphone at once responds as soon as a compensating current flows through the neutral wire.

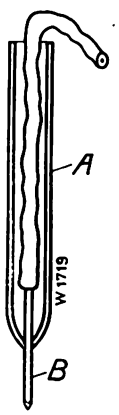

Fig. 4. Detector.
A Glass tube
B Copper wire

The detector, Fig. 4, consists of a copper wire B of minimum diameter sealed in a thin glass tube. To measure the potential inside the liquid, the detector must be as thin as possible and well insulated leaving bare only the point.

Fig. 5 is a photograph of the complete testing equipment, showing that an accumulator battery with induction apparatus was employed as source of current. In the centre of this picture is seen the measuring channel with the pole plate P, which may

Digitized by Google

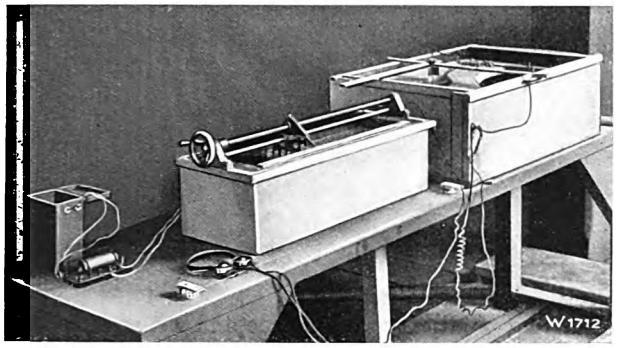

Fig. 5 Testing equipment.

be moved by means of a screw spindle. To the right is seen the wooden box containing the hollow models of the profiles to be investigated, made of paraffin wax. The two measuring bars for guiding the detector S are placed over the profiles.

The drop of voltage in the measuring channel is a linear function, see Fig. 6a. To this corresponds

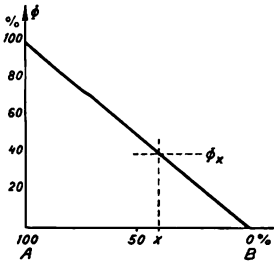

Fig. 6a.

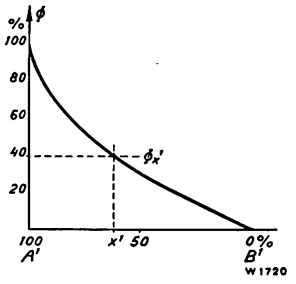

Fig. 6b.

another drop of voltage yet to be determined in the flow profile to be examined, see Fig. 6b. To each potential Φ x ascertained in the measuring channel, there corresponds an equipotential surface Φ x′ in the sector to be investigated, which intersects the meridional plane (identical with the surface of the water in the paraffin model) along an equipotential line. As soon as the telephone is silent, we have

$$\Phi_x' = \Phi_x$$

Now, instead of establishing a certain potential in the measuring channel, and to find with the detector the curve of equal potential in the model. it has been found far more convenient to lay out a system of coordinates over the model and to determine for each point of a quadratic net the corresponding potential by shifting the movable pole plate in the measuring channel. By interpolation the potential line may then be drawn and the flow lines plotted as the orthogonal trajectories to the former.

The evaluation of the potential flow diagrams.

The distance between two potential lines (applied to the hydraulic problem) offers a measure for the meridian velocity. According to Fig. 7

$$c_m = \frac{K}{\Delta s}$$

The quantity of water flowing through the section x—x′ is, therefore,

$$Q = \Sigma \pi \times D_x \times \frac{\Delta b}{\Delta s} \times K$$

D_x, Δb, and Δs are to be directly taken from the flow diagram. When the quantity of water is given, the factor K may be determined.

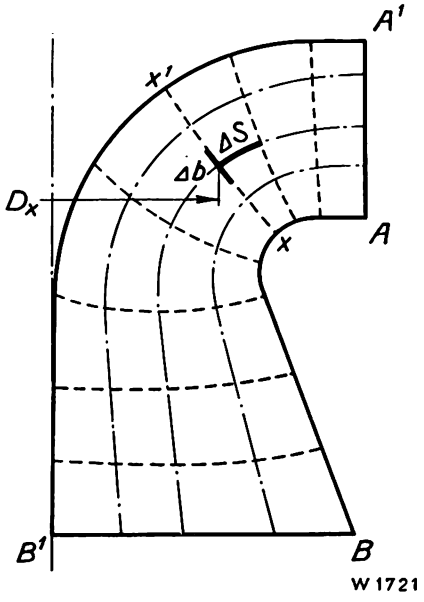

Fig. 7.

Generally it will be necessary to smooth out either graphically or mathematically the curves found experimentally (see appendix II). Thereupon it is possible to determine the velocities and pressures for every point of the meridian plane. Fig. 8, for instance, shows the distribution of pressure along the outer

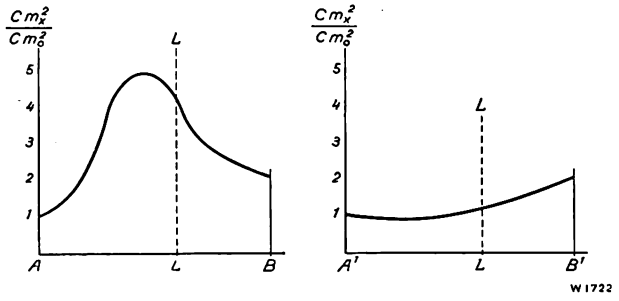

Fig. 8.

(A B, Fig. 7) and the inner (A′B′, Fig. 7) limiting profile.

Digitized by Google

It should be noted that all these diagrams are only valid when there is no runner wheel. One might, therefore, ask whether these meridian flow diagrams are of any practical importance for the design of

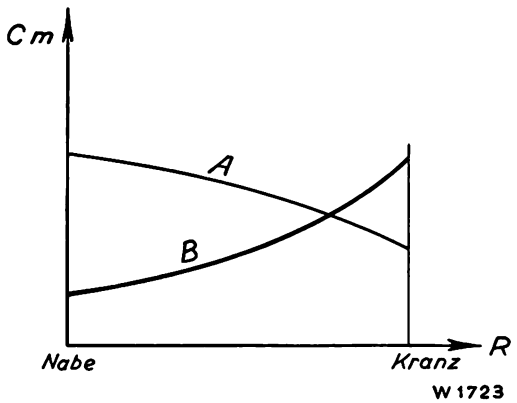

Fig. 9 Distribution of velocity between rim and hub.
Nabe = Hub; Kranz = Rim

the runner wheel. The facts of the case are as follows:

According to a theorem proved by Bauersfeld, Lorenz and Mieses, there is a blade form, which does not effect the meridian flow. To such forms, the flow diagram as obtained by the electrical method would, therefore, be applicable. For practical reasons, however, one departs therefrom in order to avoid cavitation and because due regard has to be given to the draught tubes, etc. Nevertheless, the flow line diagram is also valuable for the blade design, inasmuch as it may be used as a starting point. It may be accepted with hardly any alterations especially for Kaplan turbines, where the limit profiles are almost cylindrical, see Fig. 10.

With this method potential flow diagrams of nozzles, pipe bends and many other channels may also be easily determined with an accuracy sufficient for technical purposes.

Furthermore this method is naturally also of great importance for electrotechnical investigations as it can very easily be applied to very complicated conductor forms.

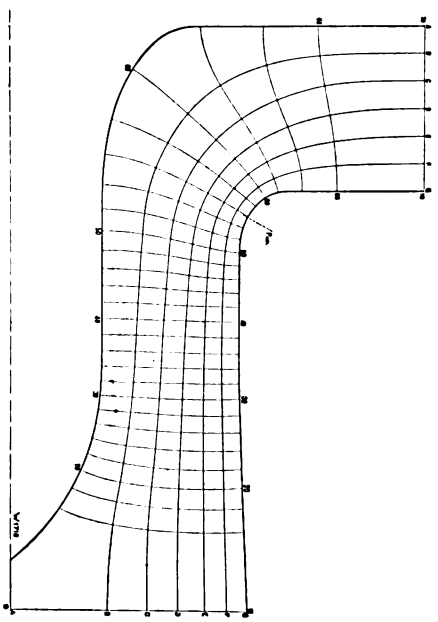

Fig. 10 Flow line diagram of a Kaplan turbine

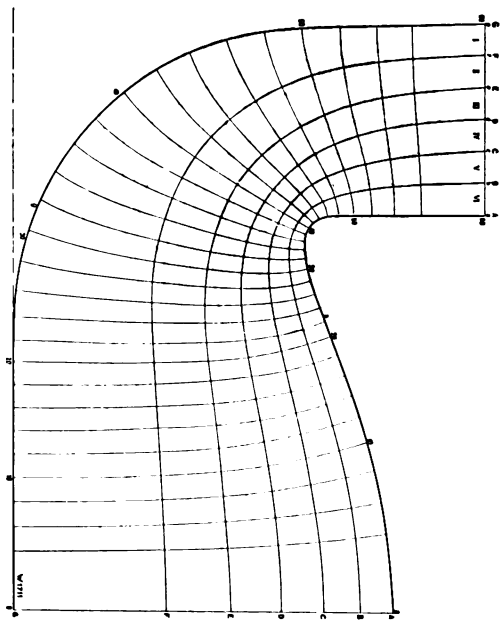

Fig. 11. Flow line diagram of a Francis turbine.

APPENDIX.

By J. Ackeret.

1. On the analogy between electrical flow and potential flow.

In the preceeding article it has been assumed as common knowledge that a direct comparison between the eddyless flow of water and electrical flow is possible. Since this fact is by no means obvious and is generally proved purely mathematically, it appears to me not to be out of place to give in as simple a manner as possible a physical insight into the fundamental phenomena. I consider this the more necessary as in descriptions of this method one meets very often totally erroneous opinions.

The transport of electricity through the conducting liquid is effected by the movement of so-called

Digitized by Google

ions, i. e. electrically charged molecules or complexes of molecules. These are subject to a very considerable friction in the surrounding liquid and, therefore, move very slowly (ten thousandths of an inch per second!).

Friction preponderates over the inertia of the molecules to such an extent that it is quite permissible to neglect the latter altogether. In that case, however, the charged particle moves along the path of the maximum difference of the acting force, i. e. at right angles to the lines of equal electric potential. A ball running down an incline with very considerable friction would move at right angles to the contour lines. Without friction, however, it would not by any means go the same way.

Let us now consider a particle of water of the analagous frictionless and eddyless flow (potential flow). The above-mentioned action of friction does not enter the question. The particle will, therefore, by no means move along the path of the maximum gradient of pressure. The equipotential lines, to which the flow lines are perpendicular, are not lines of equal pressure. Generally the potential of flow has no direct relation to the pressure along the path.

To really grasp the conditions, it is necessary not only to investigate the potential flow proper of the water but also to investigate its commencement from the condition of rest. The movement may be initiated in a number of different ways, for instance, by assuming in Fig. 3 that the surfaces A^1 and B^1 are movable pistons accelerated by external forces in the direction of the flow. If this acceleration assumes a very high value, the pressure and tension respectively acting on the pistons on the one hand naturally increase, but, on the other hand, the time required for attaining a certain velocity becomes increasingly shorter. It is readily understood that the product of pressure on the piston by time of acceleration is always the same no matter how the process of acceleration is conducted. In the extreme case one may even assume infinitely high pressure and infinitely short time, i. e. acceleration by impact. If now we imagine a single particle of the liquid first of all to be at rest and thereupon to be suddenly exposed to the above-mentioned accelerating pressure, which, multiplied by the short time of starting, may be called impact pressure, it will first of all commence to move in the direction of the maximum gradient of this pressure. Had it already been in motion, the pressure would only have enforced an alteration of the already existing velocity and its direction; here, however, the impact pressure determines the whole movement. The flow lines, therefore, are perpendicular to the lines of equal impact pressure, and it is just this impact pressure, which is equivalent to the electric potential and which here manifests itself as potential of flow. After the lapse of the accelerating period, the uniform movement sets in, the acceleration pressures disappear and pressures or differences of pressure result within the flow, which are now only called forth by the movement of the particles of water, or by their inertia, and which must be carefully distinguished from the impact pressures.

II. Ascertaining the flow paths in Kaplan turbines.

Fig. 10 illustrates the flow line diagram of a Kaplan turbine. It is readily seen that the unevenness of the velocities rapidly diminishes from the potential line 50 downwards. For the design of the blades corrections result therefrom, whose calculation requires a knowledge of the distribution of velocity. This latter may be deduced from the flow diagram only with a moderate degree of accuracy in the cylindrical part. However, there exists a possibility of ascertaining this mathematically, if the velocity in the plane where the cylinder commences

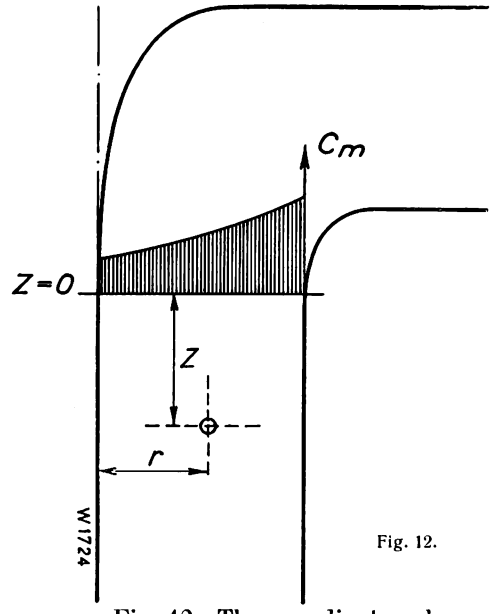

Fig. 12.

be known, see Fig. 12. The coordinate z be counted positively downwards from that point. For the mathematically interested reader we publish the formulae hereunder:

The potential Φ in cylinder coordinates has to satisfy the equation:

$$\frac{\partial^2 \Phi}{\partial z^2} + \frac{\partial^2 \Phi}{\partial r^2} + \frac{1}{r}\frac{\partial \Phi}{\partial r} = 0$$

Digitized by Google

The solution has the following form:

$$\Phi = \sum_{n=1}^{\infty} A_n J_o (k_n r) e^{-k_n z} + A_o z$$

wherein J_0 represents the Bessel function of zero order. A_n amplitudes to be determined and finally k_n constants, which are determined by the limit conditions.

Let us for the sake of simplicity consider an extremely thin hub, then for r = R = radius of cylinder, this condition is:

$$\frac{\partial \Phi}{\partial r} = \sum_{n=1}^{\infty} -A_n J_1 (k_n r) \times k_n e^{-k_n z} = 0 \text{ for } r = R$$

This requires, since the equation is to be valid at least for all positive values of z, that

$$J_1 (k_n R) = 0$$

J_1 is the Bessel function of first order. The zero digits are known: *)

$$n = 1 \qquad k_1 R = 3.82$$
$$n = 2 \qquad k_2 R = 7.01$$
$$n = 3 \qquad k_3 R = 10.17$$

and so on.

The solution, therefore, is:

$$\Phi = A_o \times z + A_1 J_o (3{,}82 \frac{r}{R}) e^{-3{,}82 \frac{z}{R}}$$

$$+ A_2 J_o (7{,}01 \frac{r}{R}) e^{-7{,}01 \frac{z}{R}} + \ldots$$

The values A_1, A_2 etc. must now be so determined that the velocities $\frac{\partial \Phi}{\partial z}$ in the plane z = 0 coincide with those taken from the flow line diagram, which is a relatively simple calculation with the aid of the tables of Jahnke and Emde. Then our last equation shows how quickly the deviations A_1, A_2 etc. from the flow with constant velocity are reduced. Already at the depth $z = \frac{R}{3.82}$ the main term has been reduced to the 2.7 th part, at the depth z = R = D/2 to 2 % of the value at z = 0.

Hydraulic considerations for the lay-out of pipelines and the erection of surge tanks.

By G. Hermann.

Frequently it is found necessary to instal the turbine house at some distance from the intake of the water and to conduct the water to the turbines through open channels, ducts or pipelines. Oscillations are set up in these conduits due to governing operations and the consequent fluctuations of the water consumption, which have a considerable influence on the regulation of the turbines and the strains imposed on the piping, and must, therefore, be most carefully investigated. In the following, we shall not consider open channels, as owing to the large surface of such channels, any oscillations set up may in most cases be suppressed without any harmful effect. [1])

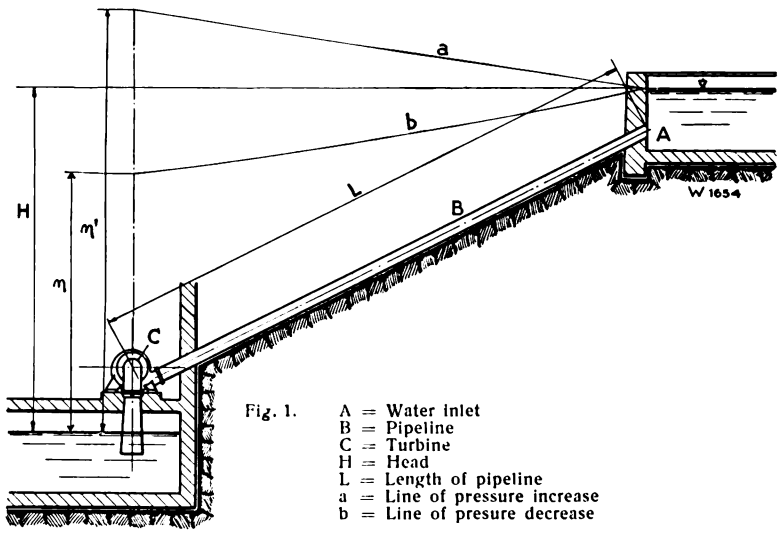

Fig. 1. A = Water inlet
B = Pipeline
C = Turbine
H = Head
L = Length of pipeline
a = Line of pressure increase
b = Line of presure decrease

*) See Jahnke und Emde: Funktionstafeln. Page 122 and 123.

[1]) See: Dr. Ing. Eugen Feifel: „Ueber die veränderliche, nicht stationäre Strömung in offenen Gerinnen, insbesondere über Schwingungen in Turbinen-Triebkanälen" Forschungsarbeiten V. D. I., Number 205

Digitized by Google

In plants with closed conduits — be they closed ducts or pipelines is quite immaterial for our investigation if the elasticitiy of the walls be duly considered [1]) — the lay-out of the pipeline is of fundamental importance. If the pipeline be laid as shown in Fig. 1 with an almost uniform incline and without appreciable bends, conditions are favourable inasmuch as there is no danger of a vacuum obtaining in the pipeline when the turbine is put on load. If, namely, for any reason, the guide apparatus of the turbine is opened, a drop of pressure ensues at the stop valve, which is propagated along the pipeline. The lowest pressures to be expected at each point of the pipeline be represented by the line of pressure decrease b. As this line does not intersect the pipeline, pressure above atmosphere always prevails in the latter.

With sudden reduction of the load, a maximum rise of pressure ensues, which diminishes almost linearly along the whole pipeline. If the mathematically ascertained maximum rise in pressure is duly considered in the design of the walls of the pipeline, the latter cannot be jeopardized by sudden reductions of the load, especially if pressure regulators, or in the case of impulse turbines deflector regulators, are provided.

The conditions are much less favourable when the pipeline is laid down as shown in Fig. 2. The upper part of the pipeline B lies almost horizontally

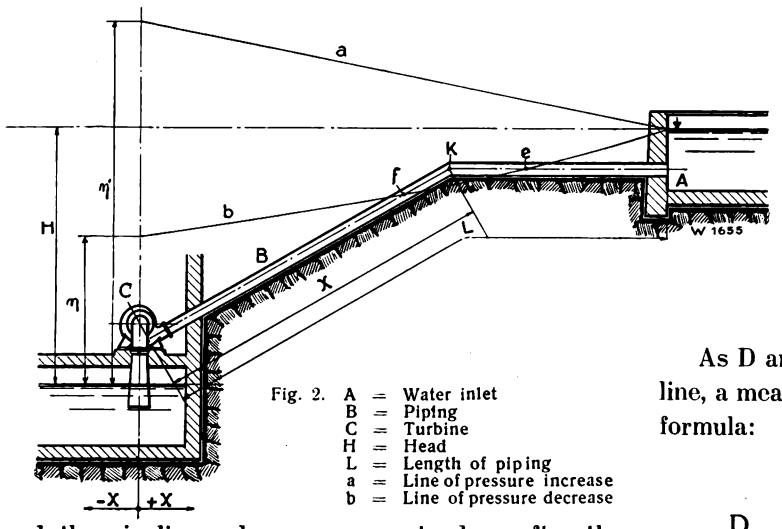

Fig. 2. A = Water inlet
B = Piping
C = Turbine
H = Head
L = Length of piping
a = Line of pressure increase
b = Line of pressure decrease

and the pipeline only commences to drop after the upper bend K. If we now draw the line b of pressure decrease, we find that it intersects the profile of the pipeline and a vacuum ensues between the points e and f. As a pipeline is much less resistive to external pressure than to internal pressure, it may be compressed by the external atmospheric pressure when the vacuum has attained a certain value, which has often happened. An equally catastrophic effect may set in when, owing to a vacuum at the upper bend, the water column parts and the air contained in the water is liberated. The pressure shocks arising when the water reunites can assume values, which are a multiple of the static pressure and represent a grave danger for the pipeline. The phenomenon just mentioned was observed in a high-pressure plant and gave rise to repeated fractures of the pipeline. This proves that under all conditions the formation of a vacuum at any point of the pipeline must be prevented and a knowledge of the shape of the pressure decrease line is, therefore, of vital importance. In the following, the fundamental rules governing the calculation of this line are given.

The opening operation gives rise to a variation of pressure at the stop valve, which is propagated along the pipeline as an oscillation. The laws governing these oscillation phenomena have been closely investigated by Alliévi [2]) and formulated by neglecting the friction and velocity heads.

To begin with, the velocity «a» at which the variation of pressure is propagated along the pipeline is ascertained. This is found to be:

$$a = \frac{9900}{\sqrt{= 48{,}3 + k \times \frac{D}{d}}} \qquad (1)$$

The coefficient k is 0.5 for iron and steel, and 1 for cast-iron.

D = diameter of pipeline.
d = thickness of walls of pipeline.

As D and d vary frequently along the whole pipeline, a mean value must be taken, as per the following formula:

$$\frac{D}{d} = \frac{L_1 \times \frac{D_1}{d_1} + L_2 \times \frac{D_2}{d_2} + L_3 \times \frac{D_3}{d_3} + \cdots}{L_1 + L_2 + L_3 + \cdots}$$

[1]) See: Dr. techn. Ing. R. Löwy: „Druckschwankungen in Druckrohrleitungen". Page 43 and following; Springer, Vienna, 1928.
[2]) See Alliévi: „Allgemeine Theorie über die veränderliche Bewegung des Wassers in Leitungen". (German translation by Dubs and Bataillard) Berlin, Springer, 1909.

Digitized by Google

The variation of pressure $-\triangle H$ caused by the opening operation reaches the water intake A after the lapse of time $t = \frac{L}{a}$ and there causes an equally large but oppositely directed pressure variation $+\triangle H$, which is propagated from the intake A with the velocity a in the direction of $-x$. This phenomenon is called the law of the hydrodynamic reaction effect. The time elapsing between the commencement of the opening operation of the turbine and the return of the reflected wave to the power station is $t = 2\frac{L}{a}$ and is called the phase of the direct water surge.

Assuming, as is permissible in most practical cases, that the opening time of the turbine is greater than the phase of the direct water surge, i. e.

$$T > 2\frac{L}{a}$$

the maximum pressure reduction ensues at the end of the phase of the direct water surge.

The first alteration of pressure at the bend K, Fig. 2, sets in after the lapse of time $t = \frac{x}{a}$ and increases until the first alteration of pressure reflected by the intake A reaches point K, i. e. after a lapse of time $t = \frac{2L-x.}{a}$. From there onward the pressure must rise again with a uniform movement of the stop valve, since according to the character of the pressure variation curve as a function of time, the reflected pressure variations increase more rapidly than the newly arriving variations decrease.

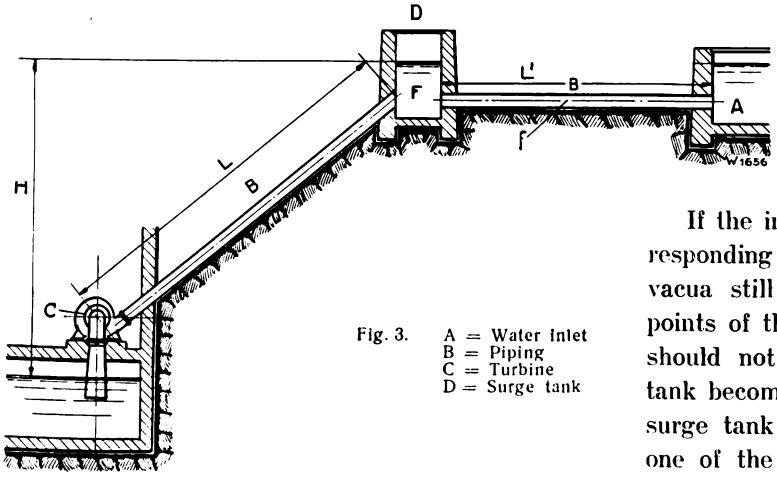

Fig. 3. A = Water inlet
B = Piping
C = Turbine
D = Surge tank

According to Alliévi the following formula holds for determining the pressure head for an opening operation during the phase of the direct water surge:

$$\eta^2 - 2\eta\left(H + \frac{a^2 \times \psi^2(t)}{g}\right) + H^2 = 0 \qquad (2)$$

wherein:

η = Pressure head in feet.
a = Propagation velocity in ft/sec.
H = Head in feet.

$$\psi(t) = \frac{c_1}{\sqrt{2gH}} \times \frac{t}{T}$$

i. e. the varying ratio between the cross-section of the pipeline and the cross-section of the effective opening of the stop valve during the movement of the latter.

c_1 = Velocity of inertia in the pipeline.
g = Acceleration due to gravity = 32.2 ft/sec².
T = Opening time of stop valve in secs.
t = Time in secs., for which the pressure head at the stop valve is to be determined.

With the aid of these data it is possible to develop the line of pressure decrease. However, if it be only a question of determining the drop of pressure in point K, then it suffices to work out equation (2) for the time $t = 2\frac{(L-x)}{a}$, because the drop of pressure acting at the stop valve in this moment can, after a lapse of time of

$$t = \frac{2(L-x)}{a} + \frac{x}{a} = \frac{2L-x}{a}$$

act unhindered in point K.

If the investigation proves that in spite of a corresponding choice of the opening time of the turbine, vacua still appear in the pipeline, the respective points of the profile must be laid lower, and if this should not be possible, the provision of a surge tank becomes peremptory. To fulfil its purpose, the surge tank must be erected in close proximity to one of the endangered points of the pipeline, i. e.

Digitized by Google

in general at the upper bend. A short distance between the surge tank and power station should thereby be aimed at in order to shorten the effective length of pipeline required for regulation.

The provision of a surge tank may also be necessitated by too long a pipeline, which influences the regulating conditions in such an unfavourable manner that the necessary flywheel mass can no longer be accomodated. Such cases can occur especially with plants with small heads, without, however, the question of vacuum in the pipeline acquiring importance.

The surge tank primarily serves the purpose of compensating the rapidly fluctuating water consumption of the turbines compared with the slower variation of the flow of water in the conduit from the water inlet to the surge tank. The simplest design of a surge tank is the cylindrical reservoir D, shown diagrammatically in Fig. 3. This design, however, offers the disadvantage that a considerable cubic content has to be provided, especially with a highly fluctuating water level of the head race, and this results in an expensive structure. Nevertheless, when the surge tank has to be erected overground, this special form will hardly be avoidable.

A considerably more favourable solution in regard to the cubic content required is shown in Fig. 4. Here the surge tank consists of an upper and a lower compensating chamber 1 and 2 and the shaft for rising water 3 lying between the two. This design allows of attaining a quicker compensation because when a variation of the load sets in, a greater difference of the water level between the water intake and the surge tank ensues in a short space of time owing to the small cross-section of the shaft.

If the local conditions permit of so doing, the surge tank should be provided with an overflow whereby the height of the surge tank may be restricted. Apart from the two forms of surge tanks just described, there are several special designs, which, however, will not be discussed here.

To determine the dimensions of the surge tank, the requirement that the arising oscillations be damped, i. e. that the deflections diminish in the course of time, must first of all be satisfied. The condition to be fulfilled, inasmuch as the friction losses are duly considered in the form of $h_v = \varepsilon v^2$, is:

$$F \geqq \frac{L' \times f}{2g \times \varepsilon \times H_n} \qquad (3)$$

wherein

F = Cross-section of surge tank.
L′ = Length of pipeline from water intake to surge tank (upper pipeline).
f = Cross-section of upper pipeline.
v = Velocity in upper pipeline.
h_v = Friction losses in upper pipeline.
H_n = Net head.

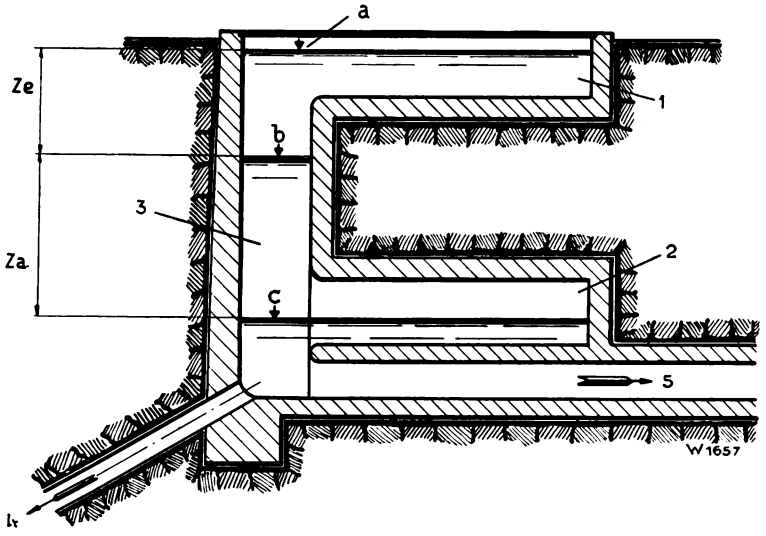

Fig. 4 1 = Upper compensating chamber
2 = Lower compensating chamber
3 = Shaft for rising water
a = Maximum rise
b = Head race water level at rest
c = Lowest level
4 = To the turbines
5 = To water intake

As it is impossible to predetermine the friction coefficient for calculating h_v, it will be appropriate to assume two values, of which it is known that the actual value is the mean value of the two. To calculate the surge tank for load reduction, the smaller value is inserted, whereby the ascertained maximum rise of the water level in the surge tank will turn out larger than in reality. Conversely, for sudden loads the larger friction coefficient must be inserted; the mathematically found lowering of the water level will then be somewhat greater than is actually the case. The maximum rises and drops of the water level in the cylindrical surge tank, Fig. 3, may be calculated mathematically with comparative ease. There exist a number of formulae published by dif-

Digitized by Google

ferent authors, of which those developed by Forchheimer are quoted hereunder.

To the relations indicated above must be added:

Q = the total quantity of water in cub. ft. per sec. taken from the surge tank.

c = the assumed water velocity, in ft. per sec., which would prevail in the upper pipeline, if the total quantity of water Q withdrawn from the surge tank would alone flow through the upper pipeline.

z = fluctuation of the water level in ft. in the surge tank, referred to the water level of the head race at rest z_e thereby implies the rise calculated negatively, and z_a the drop calculated positively.

t = time in seconds.

For sudden load reductions of the turbines, the maximum rise of the water level z_e in the surge tank may be calculated from the formula

$$(1 + r z_e) - \log \text{nat}\,(1 + r z_e) = (1 + r h_v) \qquad (4)$$

wherein

$$r = 2\,\varepsilon \times \frac{g\,F}{L' \times f}$$

h_v = friction losses in the upper pipeline before commencing to close the stop valve.

For the lowest drop of the water level z_a due to sudden load on the turbines, the following equation holds

$$z_a = 0.178 \times h_v + \sqrt{(0.178 \times h_v)^2 + 2 \times h_v \over m} \qquad (5)$$

wherein $m = \dfrac{2 \times g \times F \times h_v}{L' \times f \times c^2}$

In these equations the friction losses in the duct are duly considered, but the opening and closing times of the turbines and the influence of pressure regulators have been neglected and sudden opening and closing assumed in stead. As, however, these times are generally very small in comparison with the oscillation time in the surge tank, their influence on the fluctuations of the water level is also quite irrelevant.

The investigation becomes somewhat more difficult if the surge tank is executed with varying cross-sections, for instance as shown in Fig. 4, with an upper and a lower compensating chamber.

In such cases a graphic method indicated by Mühlhofer *) offers the possibility of accurately determining the complete oscillation cycle in a surge tank of any design. Apart from this, the possibility exists of taking into account the opening and closing times of the turbine and of introducing the frictional resistance in any form.

The fundamental idea of the graphic investigation of the surge tank is the following:

From the condition that for one and the same interval of time d t the quantity of water withdrawn from the surge tank must equal the sum of the quantity of water flowing to the surge tank through the upper pipeline plus the variation of the quantity of water itself in the surge tank, may be deduced:

$$Q\,dt = f \times v \times dt + F \times dz$$

or since $c = \dfrac{Q}{f}$

$$\frac{dz}{dt} = \frac{c - v}{F/f} \qquad (6)$$

A second relation is found by applying the dynamic fundamental equation, mass × acceleration = force. If the water column oscillating in the surge tank proper be neglected, which is quite admissible because its mass is smaller than that of the water content of the upper pipeline, and the resistances prevailing in the surge tank be neglected, then the above theorem with $\dfrac{dv}{dt}$ as acceleration gives us

$$\frac{L'\,f\,\gamma}{g} \times \frac{dv}{dt} = (z - h_v)\,\gamma\,f$$

or since $h_v = \pm\,\varepsilon\,v^2$

$$\frac{dv}{dt} = \frac{z - (\pm\,\varepsilon\,v^2)}{L'/g} \qquad (7)$$

Assuming z and v to be plotted in a rectangular system of coordinates as a function of t, whereby the t-axis be the abscissa axis and the z- and v-axis the ordinate axis, equations (6) and (7) express the tangential course of the curves (t, z) and (t, v). If, namely, α and β signify the angle contained by the t-axis and a line drawn through any point of the curve (t, 2) and (t, v) tangentially to the curve, then

$$\tan\alpha = \frac{dz}{dt} = \frac{c - v}{F/f}\,, \text{ and}$$

*) See Dr. techn Ludwig Mühlhofer: „Zeichnerische Bestimmung der Spiegelbewegungen in Wasserschlössern von Wasserkraftanlagen mit unter Druck durchflossenem Zulaufgerinne" Berlin, Springer 1924.

Digitized by Google

$$\tan\beta = \frac{dv}{dt} = \frac{z - (\pm \varepsilon v^2)}{L'/g}$$

With the aid of the preceeding considerations, the z-curve, i. e. the curve of the fluctuations of the water level in the surge tank may be plotted as a function of time, to determine which the v-curve must also be plotted.

Geared vertical water turbines for small and medium outputs.

By G. Grossmann.

The endeavours of turbine designers have always been directed on increasing the speed of the runner wheels and therewith also their «swallowing» capacity in order to obtain turbines of smaller dimensions, i. e. cheaper turbines, and higher speeds, which, even with low heads, would allow of direct coupling with the electric generator, or at least of employing as low a gear ratio between the turbine and generator as possible. The results of these endeavours are reflected in the modern expressions « super high-speed - turbine », « express - turbine », « propeller-turbine » and « Kaplan - turbine ».

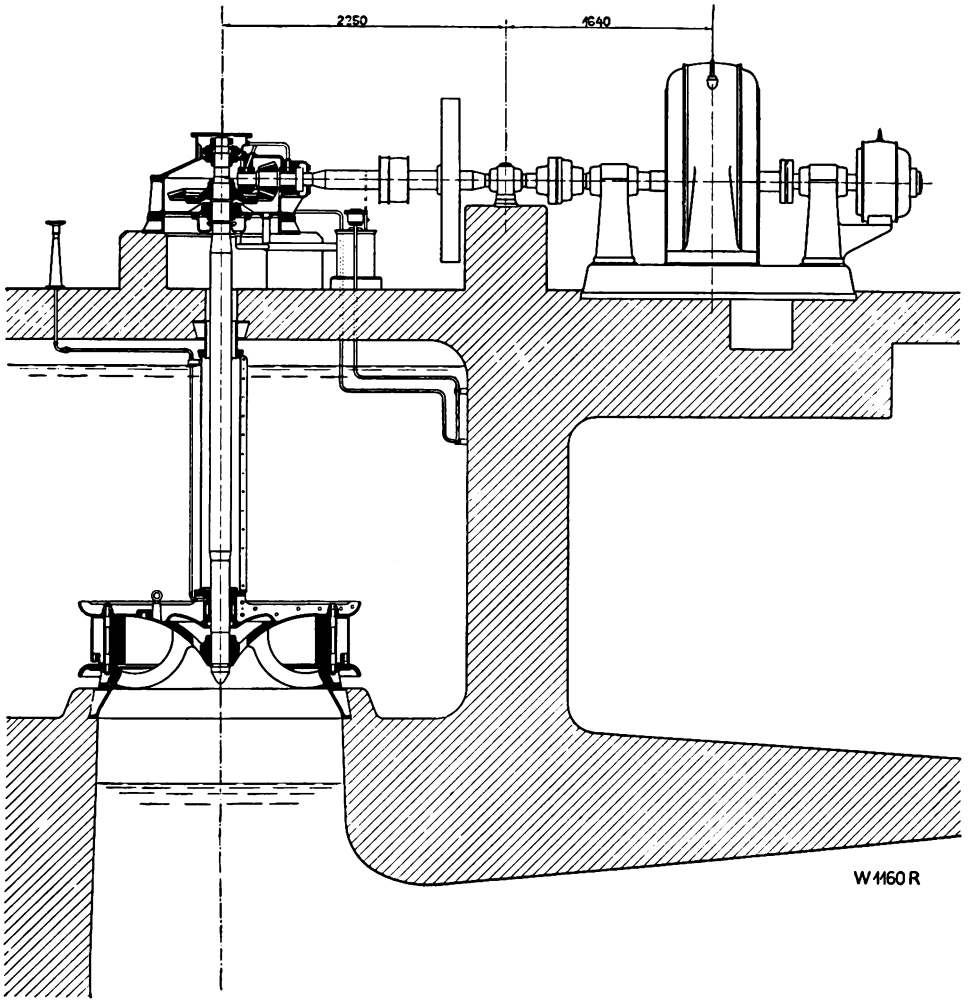

Fig. 1.

In all cases where direct coupling of the generator with the turbine is practicable, the speed increase has not only reduced the costs of the turbine proper but has also resulted in a considerable cheapening of the generator, which may be designed much smaller and lighter. With small heads, and employing high-

Digitized by Google

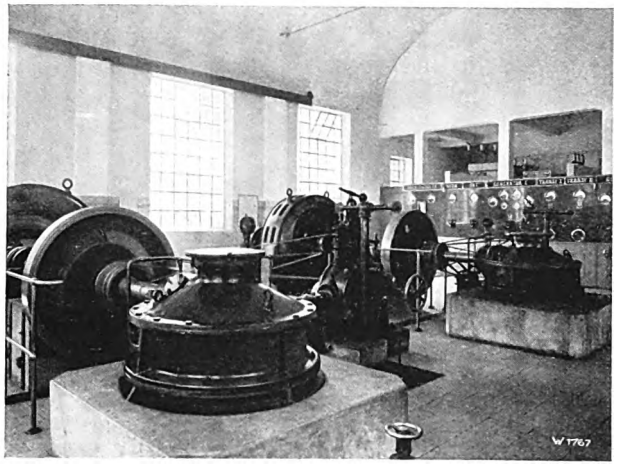

Fig. 2.

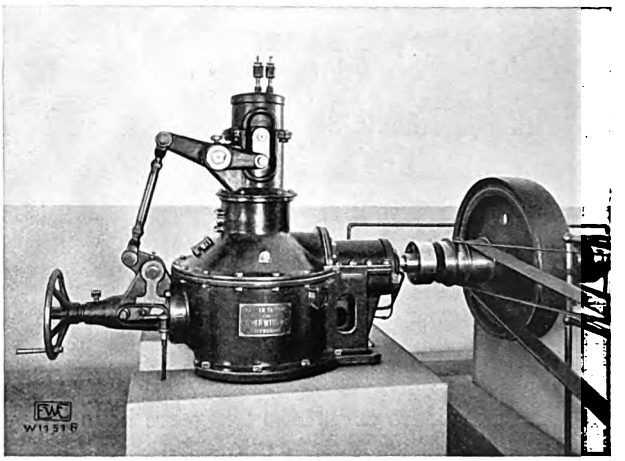

Fig 4.

speed runner wheels, comparatively low speeds of the turbine shaft are yet obtainable. Where high outputs are concerned, for which in any case special designs of the generators become necessary, it is a question of calculating the costs to ascertain whether the generator should be coupled directly with the turbine shaft, i. e. a low-speed, heavy and expensive generator be selected, or whether a gear of correspondingly large gear ratio be interposed, permitting of using a high-speed light and cheap generator. If

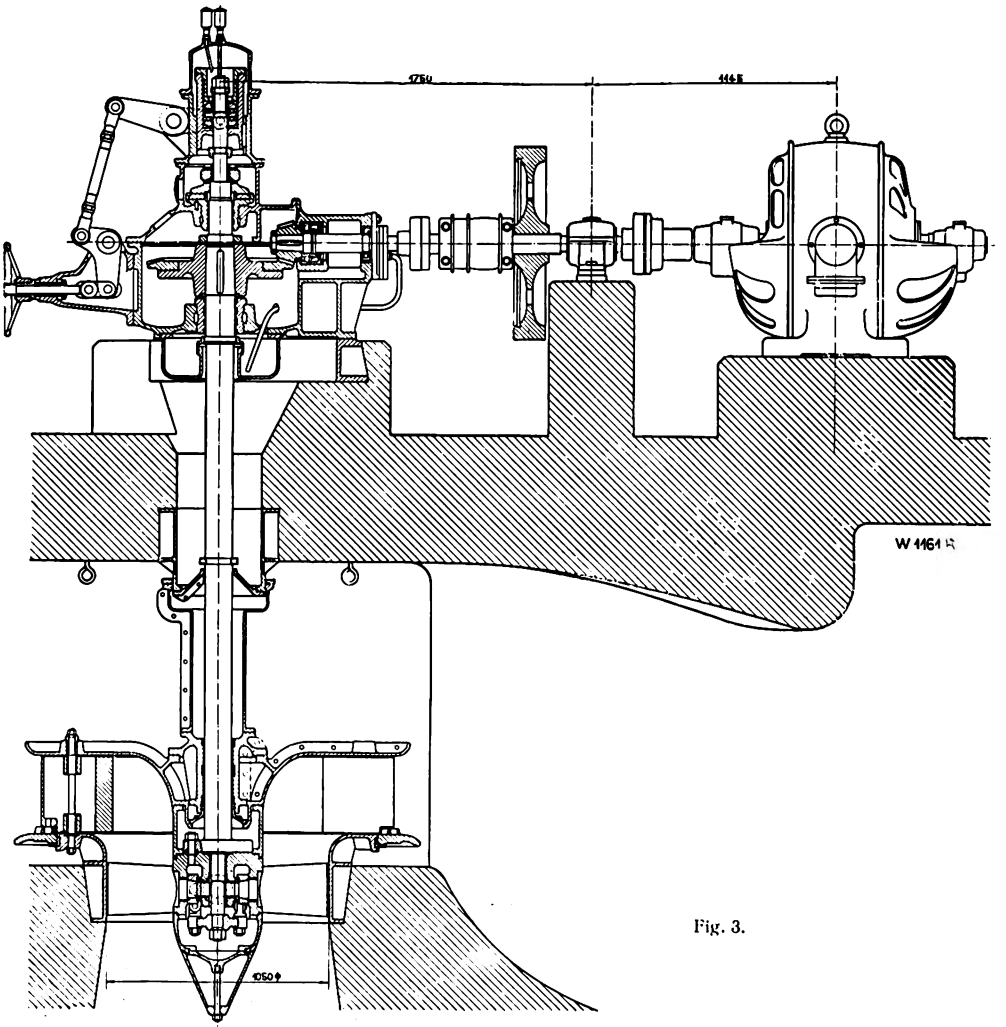

Fig. 3.

Digitized by Google

the difference of price tells in favour of the gear, one will without hesitation decide to employ a gear, as the specialist firms manufacturing such gears produce them with such perfection that they are absolutely reliable in service and run quite noiselessly. If, however, the comparison of the costs of the geared and gearless generator results in only a relatively low financial advantage in favour of the former, then direct coupling with the prime mover should be preferred, as it is undoubtedly the more reliable design, alone for the reason that at least one machine element less is employed, which might give rise to trouble.

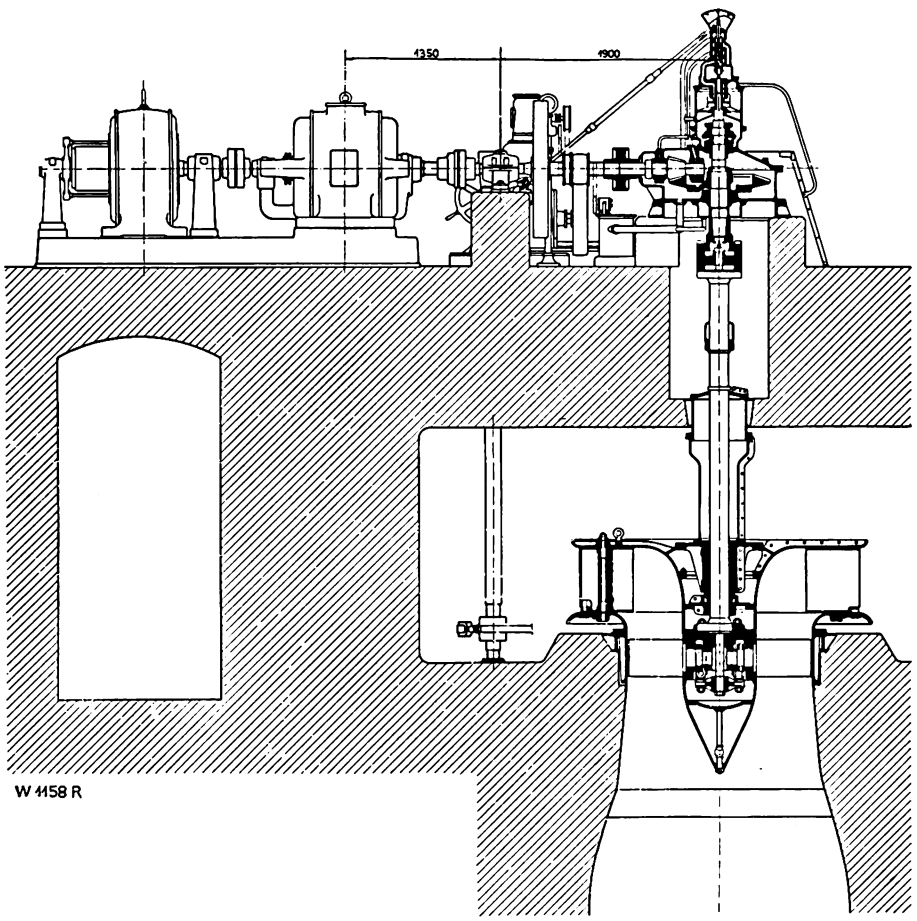

Fig. 5.

Conditions are somewhat different for plants of small and medium outputs in which standardized electric generators may be used of which the electrical engineering firms have the drawings and patterns handy. These standardized generators can always be

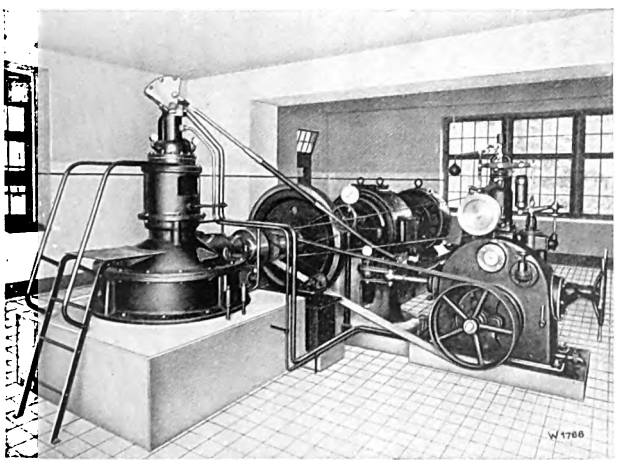

Fig. 6.

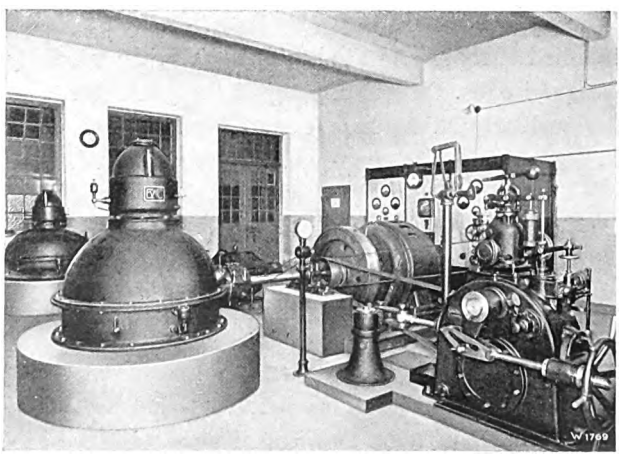

Fig. 7.

Digitized by Google

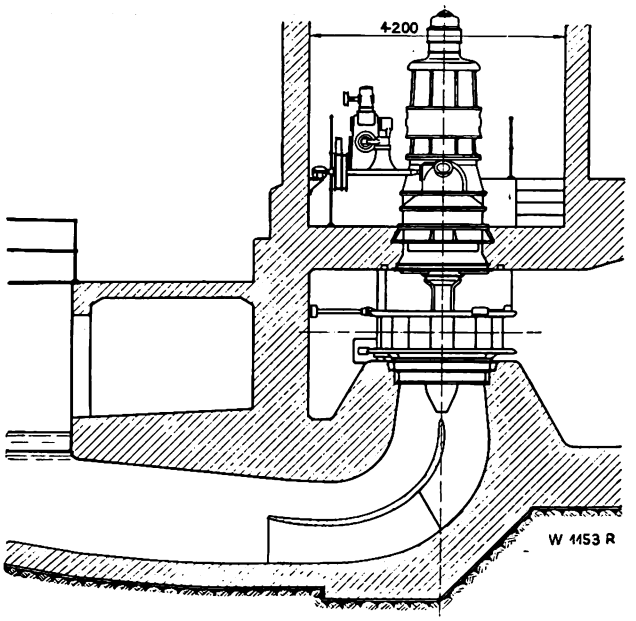

Fig. 9

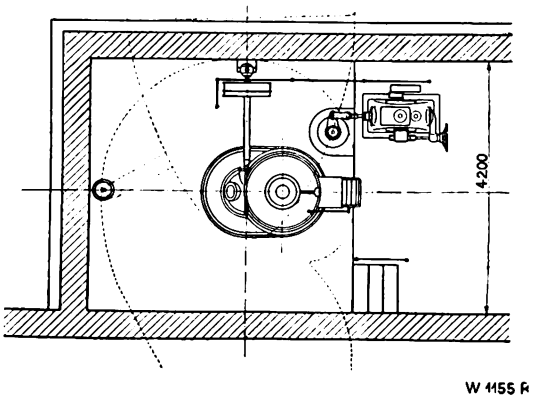

Fig. 10.

supplied cheaper and at shorter notice than specially designed ones. Direct coupling of the generator with the turbine will in such cases generally not enter the question and a gear will have to be used.

Such plants of small output with vertical turbines, which alone will be dealt with here, were formerly always executed in such a manner that the upper end of the turbine shaft was equipped with a bevel wheel gear whereby the generator was driven either directly, or by means of a belt from the horizontal countershaft. Wooden and iron wheels were used as

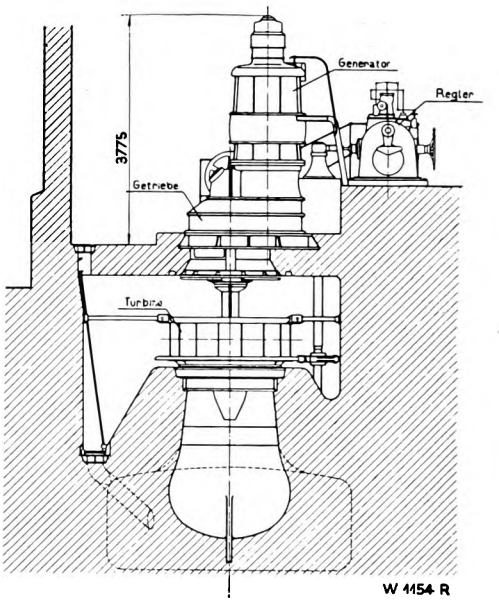

Fig. 11.

bevel wheels. The larger wheel is provided with wooden teeth, whilst the smaller wheel, or pinion, is made entirely of cast-iron or cast-steel. These wood-iron wheels serve their purpose very well if the stresses and peripheral velocities can be kept within reasonable limits and are even nowadays employed in many cases. Naturally they must be well-supported and well-lubricated whilst running. However, wood-iron wheels are always noisy and cannot be considered where high speeds are concerned and practically noiseless running is stipulated.

Messrs. Escher Wyss & Co., therefore, at an early date substituted these wood - iron wheels by other constructions. First of all wheels with herringbone teeth, the so-called Citroën wheels, were used. The

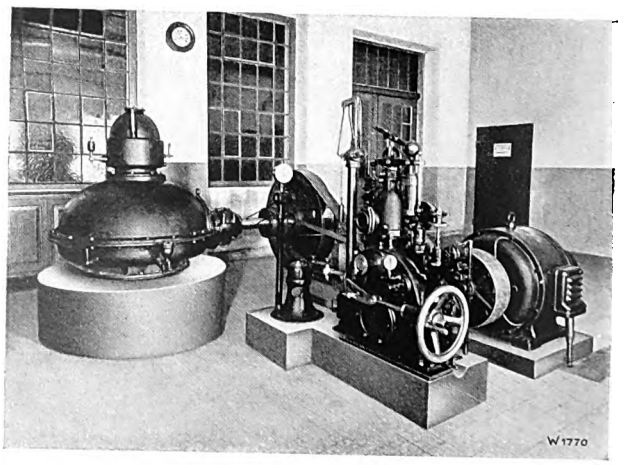

Fig. 8.

Digitized by Google

material of these wheels is cast-steel for the large wheel and Siemens-Martin steel for the pinion. Wheels of this kind are running quite satisfactorily in a number of plants. However, their pitch is comparatively large and they do not run sufficiently quietly at the speeds employed today.

Messrs. Escher Wyss & Co., therefore, proceeded to use bevel wheels with precision teeth and small pitch for such bevel wheel drives. These gears are contained in casings and supported in strong bearings; the lubricating oil is provided by a toothed wheel oil pump and squirted directly on the flanges of the teeth by means of a jet pipe. These enclosed precision bevel wheel gears may be supplied with straight, oblique or helical teeth. Straight teeth suffice for small outputs if one is prepared to accept the somewhat greater noise when running as an offset for the cheaper purchase price. Generally, however, the oblique or helical teeth will be preferred because of their practically silent running. Wheels with helical teeth can only be executed up to a certain maximum diameter in Europe; wheels of larger dimensions must be imported from the United States of America because the machines required for hobbing the helical teeth of large bevel wheels are not available on this side. Therefore, to emancipate oneself from

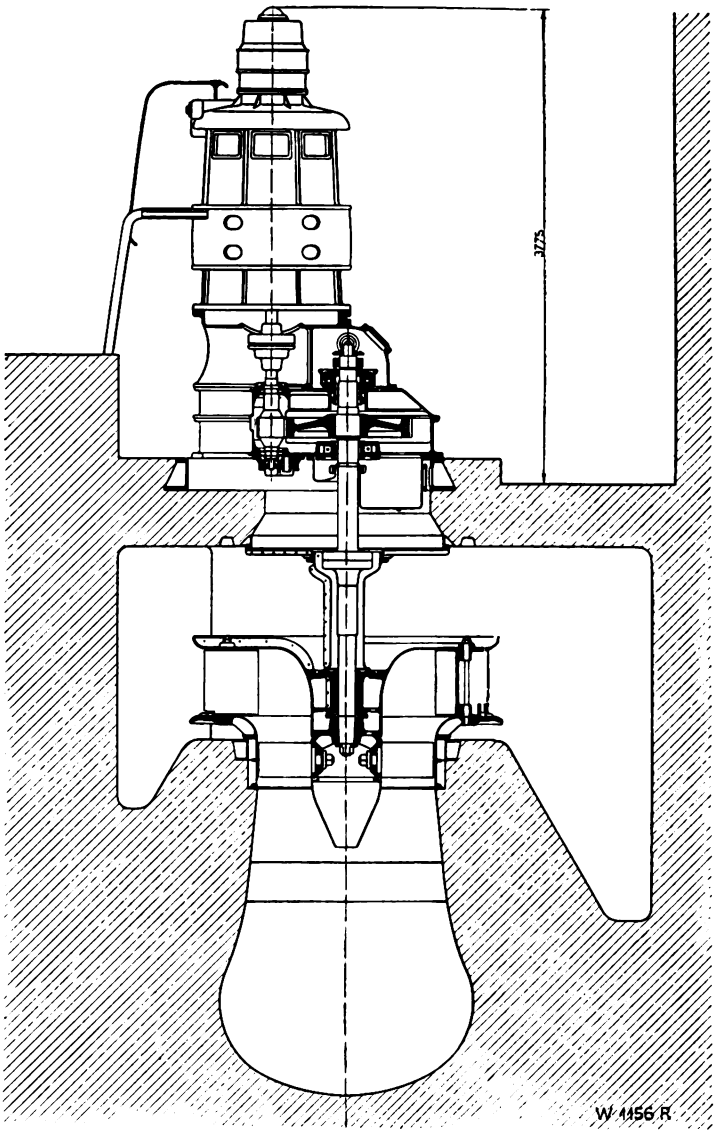

Fig. 12.

Digitized by Google

the inevitable long deliveries of such wheels from abroad, one will decide to adopt wheels with oblique (herringbone) teeth, the more so as they run almost as silently as wheels with helical teeth.

In conclusion a description is given of some plants, which Messrs. Escher Wyss & Co. have carried out within the least few years, employing the above-mentioned precision bevel wheel gears.

Fig. 1 illustrates an express turbine for an output of 184 HP at 125 r. p. m. of the vertical turbine shaft. By means of a precision bevel wheel gear with a gear ratio of 1 to 3 it drives a horizontal generator running at 375 r. p. m. Fig. 2 is a view of the machine plant. The two turbines were originally equipped with wood-iron bevel wheel gears, which, however, were very noisy. The nuisance caused by them has been completely banished by adopting precision gears.

Fig. 3 illustrates a Kaplan turbine arranged in the same manner. The turbine has an output of 80 HP. The turbine speed of 214 r. p. m. is increased to the generator speed of 750 r. p. m. by means of a precision bevel wheel gear. The adjustment of the movable runner wheel blades is here performed by hand, whereby the adjusting force exercised by the hand driving mechanism fixed to the gear casing is transmitted by means of a toggle lever through a ball thrust bearing to the adjusting head fixed to the top end of the adjusting rod. The adjusting head and adjusting mechanism inside of the Kaplan hub are interconnected by means of the movably supported adjusting rod inside the hollow turbine shaft. The

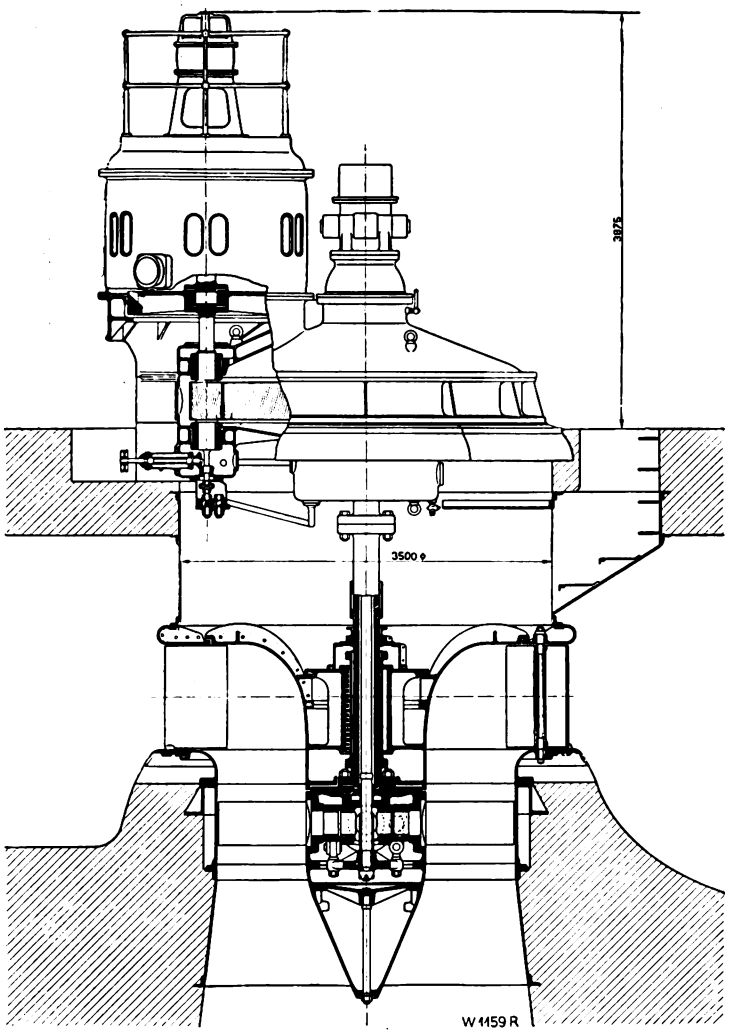

Fig. 13.

Digitized by Google

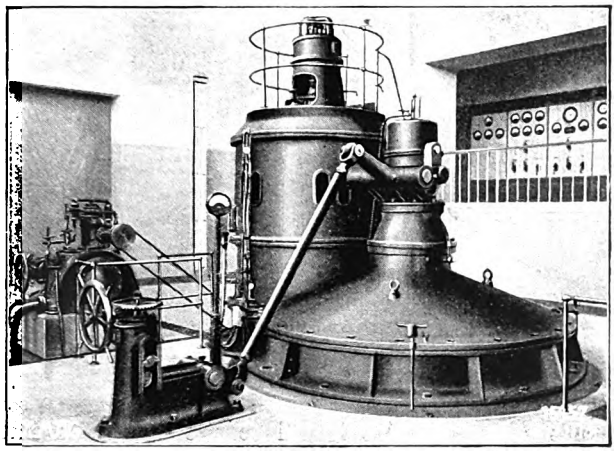

Fig. 14.

photograph, Fig. 4, of this gear clearly shows how compact such a drive turns out.

Fig. 5 illustrates a drive similar in principle, but for automatic blade adjustment. The output to be transmitted is 186 HP, the speed of the turbine 150 r. p. m. and that of the generator 750 r. p. m. In this case, the adjustment of the runner wheel blades is effected by a servomotor, controlled by a pilot valve situated over the gear, and connected up between the gear and the turbine in the shaft piping. The oil intake and discharge pipe between the servomotor and the pilot valve is carried through the hollow gear shaft, whilst the connection between the piston of the runner wheel servomotor and the rotary runner wheel blades is effected by means of an adjusting rod situated inside the hollow turbine shaft, as in the preceeding example.

The photograph, Fig. 6, again shows how appropriately the control gear may be combined with the gear.

Fig. 7 and 8 illustrate two turbine sets in an engine room likewise equipped with precision bevel wheel gears. The smaller turbine transmits 80 HP at 100 r. p. m. of the turbine to the generator running at 500 r. p. m. The output of the larger turbine is 150 HP at 105 r. p. m., the speed of the generator being 500 r. p. m.

Such precision bevel wheel gears run absolutely free of vibrations and silently. Whilst plants operating with wood-iron wheels are always a nuisance in the neighbourhood of inhabited buildings, owing to the noise they create, it is quite permissible to provide dwellings over or adjacent to an engine room where precision gears are running. The gears have a high efficiency, which at half-load figures out at 97 to 98 per cent, and at full load at 98 to 99 per cent, the first value applying to the smaller and the second value to the larger types.

In cases where the required gear ratio or the output can no longer be mastered by these bevel wheel gears, or the available room does not allow of adopting the horizontal drive of the generator, spur wheel gears with vertical generators, which are generally mounted directly on the gears, are adopted.

Figs. 9 to 12 illustrate such a plant for an output of 254 HP at 160 r.p.m. of the turbine and 750 r.p.m. of the generator.

A plant of similar arrangement, but for a larger output, is shown in section in Fig. 13, whilst Fig. 14 is a view of the plant. In this case 629 HP of the turbine running at 83.3 r. p. m. are transmitted to the generator shaft running at 750 r. p. m.

Digitized by Google

Automatic drainage plants.

By H. von Gonzenbach.

There is an ever-increasing demand for automatic pumping plants, especially for the removal of waste water, or for drainage purposes. As the centrifugal pump of itself is not capable of sucking the water, it must generally be primed before starting up, which necessitates the provision of a foot valve. This manipulation is not suited for automatic starting up. The simplest and most reliable solution consists in placing the impeller of the pump in the tail water, where it will always be full of water and ready to operate at a moment's notice. The vertical design at once suggests itself, because horizontal sets mostly require expensive buildings, as the pump shafts have to be placed so low down that the water, even at the lowest level of the tail water, must flow to the pumps. A further advantage of the vertical design, especially for individual plants, is the smaller ground area required, an important item when figuring out the costs. Thus a typical form has been developed, which is being increasingly used for the special purposes mentioned above. In the following, a number of plants executed by Messrs. Escher Wyss & Co. within the least few years will be described.

To commence with, the type of pumping plant employed for removing waste water, as installed for the Baugenossenschaft zum Brunnen in the bank building of Messrs. Leu & Co. in Zurich. In this plant the total waste water of the building is collected in a vault. As this vault lies deeper than the municipal canalization, one is compelled to discharge the vault contents into the sewer system by means of a pump. The lay-out of the plant is illustrated in Fig. 1. The vertical pump has a capacity of 2 gals. per sec. under a manometric head of 23 ft. and at a speed of 1430 r. p. m.; it lies in the tail water and the water intake is axial. Owing to the impurities of the water, a duplex strainer is provided to protect the impeller. The outer strainer with coarse meshing may be raised for periodical cleaning, a safety measure, which has proved eminently satisfactory.

The water passes from the vertical pressure pipe, through which the shaft is carried, and the intermediate piece combined with the pedestal of the pump, into the pressure pipeline.

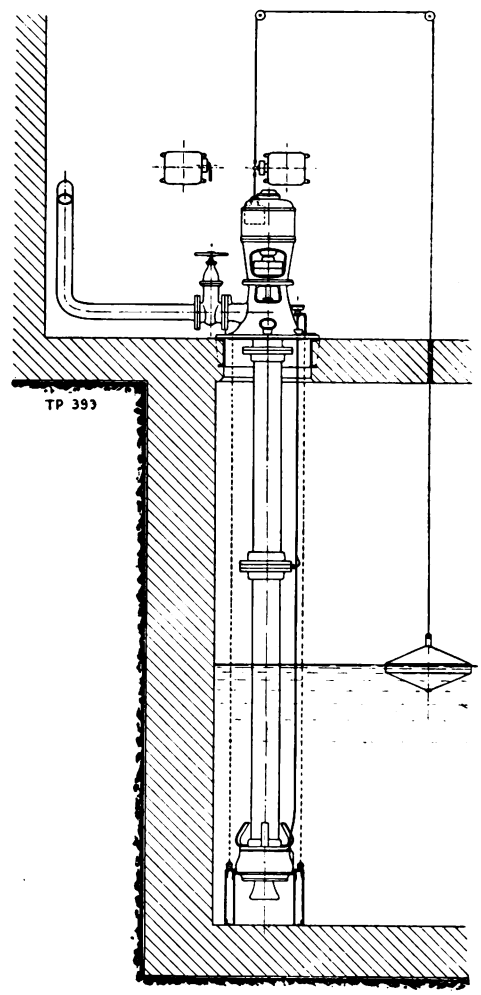

Fg. 1. Pumping plant in the bank building of Messrs. Leu & Co., Zurich.

The vertical motor is direct coupled with the pump by means of a rigid coupling, so that the total weight of the rotating parts is taken up by the thrust bearing of the motor. The automatic starting and

Digitized by Google

stopping is performed in the well-known manner by means of a float. The switchgear and the motor were supplied by the Maschinenfabrik Oerlikon. The lubrication of the journal bearing of the motor and of the guide bearing of the shaft lying between the pipe flanges is an important item. Owing to the impure water, grease lubrication was selected. The length of the single pipes and of the shaft was determined by the limited height of the cellar locality with a view to having sufficient head room for dismantling them. The plant has proved very satisfactory in service.

An interesting pumping plant, also regarding the building items, is the Altenrhein plant, which was planned and executed by the Rheinbauleitung in Rorschach for the A. G. Dornier-Flugzeuge in Altenrhein. As it may be of interest to our readers to have some information on the inception of the plant and especially the quantity of water to be dealt with, we publish hereunder the data kindly given us by Mr. Böhi, chief engineer of the Rheinbauleitung:

«The flying grounds at Altenrhein were laid out in a low and for the greater part very marshy area of a former mouth of the River Rhine east of Staad. This area in part lay considerably lower than the higher water levels of the Lake of Constance and was, therefore, annually flooded for a shorter or longer period. The deepest parts were filled up with sandy material dredged from the bottom of the lake by means of a suction dredger. However, the filling up to over the maximum level of the lake would have entailed enormous costs and, therefore, the area was filled only up to the level 397.00 (the highest level of the lake in June 1910 and 1926 was 397.80, and 397.96 end of August 1890), dammed up against direct flooding and then drained by an extensive drainage system, which sucks off the surface and ground water and conducts it through two main collecting channels of 16″ to 28″ internal diameter to the accumulating basin and pump shaft.

The flying grounds cover an area of 175 acres; the surface water of the ground lying towards Bauriet and covering an area of 100 acres must also be drained, so that the pumping plant has to deal with an area of 275 acres. To determine the size of the three pumps, which have to cope with the very fluctuating quantity of water, the following data were accepted as a basis: according to preliminary observations, the minimum inflow to the basin is 3.5 to 5 gals. per second. In accordance with the statements of the culture engineer, a maximum discharge of 0.2 gals. per second per acre has to be considered, to which must be added 25 per cent for infiltration at high level of the lake and, therefore, also high ground water level in the neighbouring district. Thus a maximum inflow of approximately 60 gals. per second must be taken into account. In order to have a sufficient capacity of the pumps available also for exceptional cases, their capacity was further increased by 20 per cent, and three pumps of 44.5 + 22.5 + 5 gals./sec. = 72 gals. per second total capacity under a normal head were installed. The Neugraben, flowing into the Lake of Constance and banked up against the flying grounds, serves as drain.»

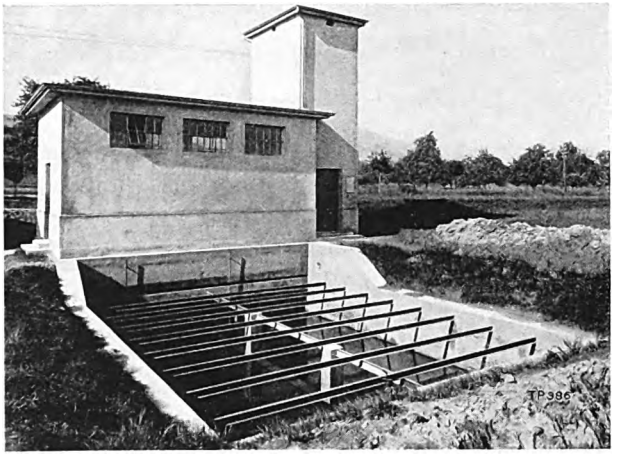

Fig. 2. Pumping station of the A.-G. Dornier Flugzeuge in Altenrhein.

Figs. 2 and 3 illustrate this plant. Special attention had to be given to the elimination of sand, which due to the nature of the ground was to be expected after rainfall. The accumulating reservoir was designed as settling basin and provided with baffles to facilitate the depositing of the sand. During the first year's service the conditions proved that this was a very wise measure, which prevented excessive wear of the pumps.

The three pumps are of vertical design and direct coupled with the motors. The chief constructional data are:

	Pump I	Pump II	Pump III
Q	5 gals/sec.	22.5 gals/sec.	44.5 gals/sec.
H_{man}	12 ft.	10 ft.	10 ft.
n	725 r. p. m.	725 r. p. m.	725 r. p. m.
HP	1.8	5.5	11.5

Digitized by Google

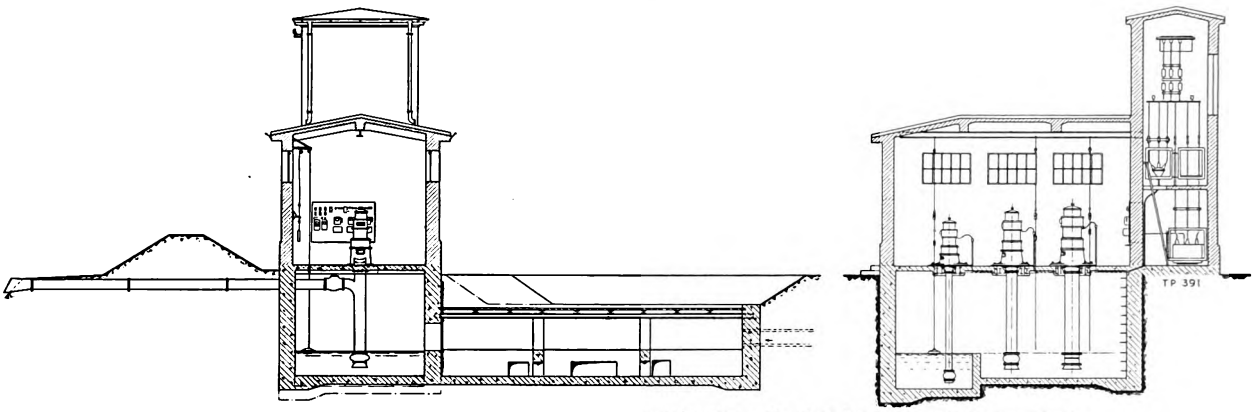

Fig. 3. Longitudinal and cross section of the pumping plant for the A.-G. Dornier Flugzeuge in Altenrhein.

The speed was taken as high as possible in order to avoid expensive motors, but still in keeping with a good efficiency. Float control was also provided for this plant and the pump start up at different levels of the tail water.

Pump I serves for normal water levels, pump II for medium water levels and pump III for high water levels. Therefore, all three pumps are in service, when there is a great rush of water. Each pump has its own pressure pipe with flap valve. All pressure pipes discharge into the Neugraben, which conducts the water into the lake. Contrary to the first-mentioned plant, the journal bearings of these pumps are lubricated with water. The bearings are lined with lignum vitae. The guide bearings are lubricated with grease. In other constructional details these pumps resemble the first-mentioned ones. The electrical equipment was supplied by Messrs. Brown, Boveri & Co. of Baden (Switzerland). As may be seen in Fig. 4, the complete control apparatus is centralized on a switchboard. The h. t. current is transformed to the required service voltage by transformers situated in the tower adjoining the pumping station, which is well suited to its surroundings.

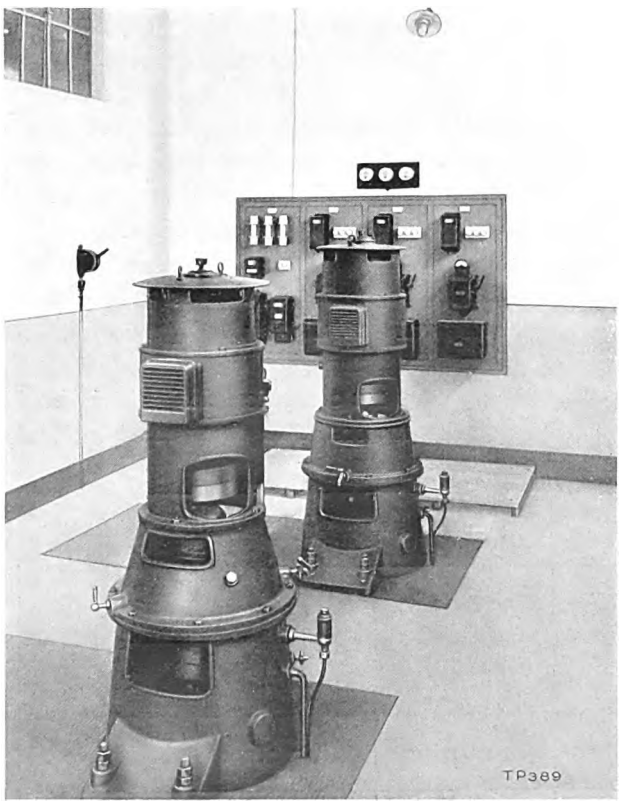

Fig. 4. Inside view of the machine room of the pumping station for the A.-G. Dornier Flugzeuge in Altenrhein.

As third plant we will briefly describe the pumping station in Flaach, which was planned by the Meliorationsamt of the Canton of Zurich for the Flaach municipality, see Fig. 5. In principle the pumps were similarly arranged as those in Altenrhein. Here likewise two sizes of pumps were adopted in order to have more freedom regarding the quantity of water to be dealt with. The principal data of the pumps are contained in the following table:

	Pump I	Pump II
Q	6 gals/sec.	15½ gals/sec.
H_{man}	12 ft.	9 ft.
n	725 r. p. m.	725 r. p. m.
HP	2.1	3.5

As relatively pure water with small content of sand was to be expected when draining the Flaach plain after putting down the drainage pipes, a settling basin with baffles was not considered necessary, although generally, wear through sand should be

Digitized by Google

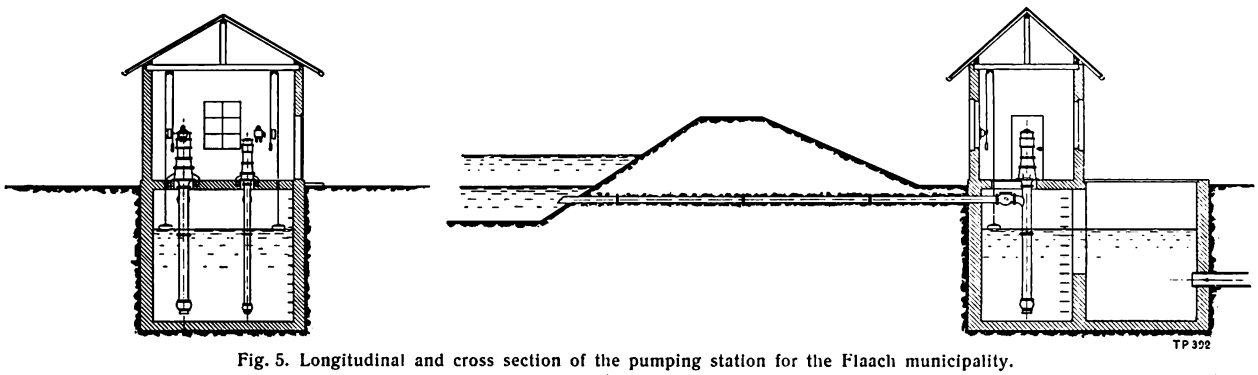

Fig. 5. Longitudinal and cross section of the pumping station for the Flaach municipality.

avoided on principle. The electrical outfit including the float switch was supplied by the Maschinenfabrik Oerlikon.

In conclusion we would mention that another plant designed on the lines set forth above is just being erected for the Tiefbauamt of the Canton of Zurich in Dietichon.

This drainage plant became necessary owing to the subway of the cross-country road passing under the Dietichon railway station. A large and a small pump were also provided here, the smaller of the two chiefly serving for disposing of the infiltrated water and the water of slight rainfalls, whilst the larger one operates after heavy rainfall. To determine the quantity of water to be expected it was known that the encatchment area consisted of 77 040 sq. ft. of hard road surfaces and of 64 200 sq. ft. of grass slopes and adjoining ground. One of the principal conditions of the contract was that the prime costs and running expenses should be a minimum. The following table contains the chief data of the pumps:

	Pump I	Pump II
Q	55½ gals/sec.	4½ gals/sec.
H_{man}	15 ft.	19 ft.
n	580 r. p. m.	725 r. p. m.
HP	30	3

The plant will operate automatically, which is again effected by means of floats. The complete electric equipment will be supplied by the Maschinenfabrik Oerlikon. The larger motor of 30 HP is of the enclosed ventilated type with wound armature and built-in centrifugal starter. The windings are impregnated to protect them against moisture.

The smaller motor of 3 HP has a squirrel-cage armature and its windings are also impregnated. Both motors are designed for a voltage of 500 volts and are connected to the mains of the Cantonal Electricity Works Zurich.

Finally it may be mentioned that the pumping station is protected against frost by means of an electric stove. This precaution was held necessary because the building stands free in the open plain and is, therefore, considerably exposed to the cold.

Fig. 6. Inside view of the machine room of the pumping station for the A.-G. Dornier Flugzeuge in Altenrhein.

Digitized by Google

Small Refrigerators.

By G. Scholl.

The question of artificial refrigeration not only for large establishments, such as slaughter houses, cold storage rooms, chemical works, breweries, etc. but also for hotels, restaurants, confectioners, tradesmen and especially for households is acquiring an ever-increasing importance. There are quite a number of different systems of refrigeration on the market, which, with more or less success, attempt to satisfy the requirements involved. It would, however, be beyond the scope of this article to deal with all these systems in detail and we shall, therefore, restrict our remarks to the two principal systems used.

1. The Compression System.

This implies an apparatus operating on the following principle: In the evaporator, i. e. the cold-producing part of the plant, the refrigerating agent is evaporated under a certain low pressure by absorption of radiant heat in such a manner that the evaporation temperature is maintained at the desired low degree. Evaporation temperatures of from 2.3 to 4° Fahr. are concerned, which are required for attaining the low temperatures necessary for the preservation of foodstuffs, etc. The vapours are then sucked off by means of a compressor and raised to such a high pressure that they are liquefied either under the influence of air cooling or water cooling. The liquefied refrigerating agent now flows through a throttling orifice back to the evaporator, whereby its pressure is simultaneously reduced. Due to the reduction of pressure a small quantity of the refrigerating agent evaporates again and the liquid is thereby cooled; the remainder of the liquid is evaporated in the evaporator proper by absorbing heat from the refrigerator. This cycle is continuously repeated so long as the compressor is kept running. Where electrical drive is concerned, and that will be so in the majority of cases, this manner of cold production is by far the most favourable in regard to the quantity of cold produced per power unit at a certain evaporation temperature. An evaporation temperature of 14° Fahr. may be taken as standard, it being self-understood that all aparatus, and especially the evaporator, must be so designed that an adequate difference of temperature exists between the liquid to be cooled and the evaporation temperature.

2. The Absorption System.

This is also an important system for small refrigerators. It operates on the following principle:

In a part of the apparatus, called the boiler, heating of the refrigerating fluid by means of electricity, gas or other fuel is performed. The boiler contains an aqueous solution of ammonia from which the ammonia is expelled at a relatively high pressure under the action of the heating. The expelled ammonia vapors are liquefied under the influence of air cooling or cooling water, and the liquefied ammonia flows through a reduction valve back to the evaporator. To maintain the low pressure in the evaporator, an absorber is inserted beyond the evaporator so that the evaporated ammonia gas is absorbed by a weak ammonia solution. This solution must, however, be recooled in order to carry off the heat of absorption. The liquid enriched in the absorber is then pumped to the boiler by means of a pump, whilst the weak ammonia liquid flows from the boiler back to the absorber through a reduction valve. This process is also continuously performed so long as the heating, the cooling and the small circulating pump are kept in operation. For small installations, such as household and commercial, these absorption apparatus are simplified inasmuch as the process is not continuous but intermittent, the boiler operating alternatively as absorber, and the condenser alternatively as evaporator, a circulating pump not being employed. With this type of apparatus, a relatively short heating period is followed by a long cooling period, whereby the cooling effect is very intensive at the beginning of the cooling period, but rapidly diminishes after a comparatively short time and is practically nil at the end of the cooling period according to the duration of the latter. These absorption apparatus, therefore, naturally have the disadvantage of a highly fluctuating temperature, which is not conducive to the proper preservation of foodstuffs because a continuous oscillation about the point of saturation, due

Digitized by Google

to the temperature fluctuations, takes place so that the foodstuffs are once dry and then again become moist and may thereby easily spoil.

A special class of these small absorption refrigerating apparatus operates continuously, without employing a pump but using an auxiliary gas, such as hydrogen. These apparatus are designed on the principle of the Geppert patent of 1899 and are at present manufactured by the Electrolux Company. By means of an inert gas (hydrogen) and a thermosyphon, the cooling agent is continuously circulated without the aid of an auxiliary pump and this type is, therefore, far superior to the intermittent absorption apparatus.

All absorption apparatus, however, no matter if they are designed for continuous or intermittent operation, when electrically heated, have an energy consumption (referring to the same cooling effect, evaporation temperature and the same cooling conditions in the condenser) which for larger plants amounts to 4 to 5 times and for smaller plants to 6 to 8 times that of refrigerating machines built according to the compression system. This type of apparatus will, therefore, be inferior to compression machines as soon as the price of the electric current reaches a certain height because they operate uneconomically. The higher the cold producing capacity of the machine, the less will this factor play an important part, and for medium-size and large plants with an hourly capacity of 2000 B. T. U. upwards one will give the compression system the preference. For smaller capacities other considerations may play a part, which, however, only in very few cases may decide in favour of an absorption machine. On the strength of these considerations Messrs. Escher Wyss & Co. in 1910 decided to manufacture a small refrigerator on the compression principle and in 1913 this machine was reconstructed, utilizing the experience gained in the meantime, and was designed as a completely enclosed refrigerator, called «Autofrigor», on a system which has been retained to this day. The principal feature of it's construction is that a gas-tight metal casing (patented) is provided between the rotor and the stator of the electric motor, so that the stator is easily accessible from outside and the windings lie in the open air, i. e. in normal conditions. The squirrel-cage rotor lies inside the gas-tight machine, whereby all stuffing boxes are superfluous and all leakage caused by them avoided. The machine is automatically regulated by a float

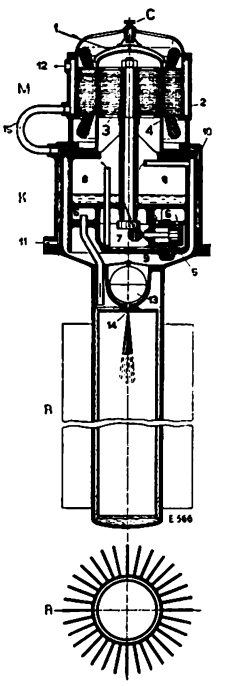

Fig. 1.

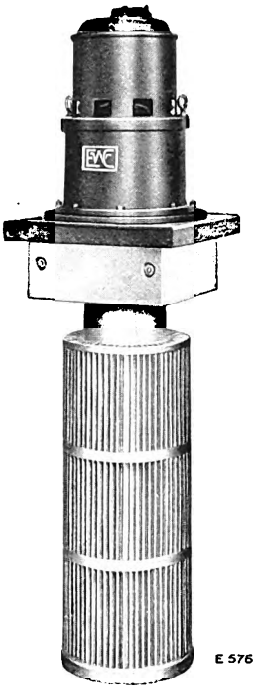

Fig. 2.

of patented design. The compressor is continuously lubricated under the influence of the gas and liquid current, which also ensures the circulation of the oil in a special circuit, thereby producing a lubrication of unlimited duration without any renewal of oil. Figs. 1 and 2 illustrate in section and view the «Autofrigor» built by our firm. This machine has already been tested by authorities, e. g.

1. Prof. P. Ostertag, Winterthur;
2. Prof. Dr. W. Redenbacher, Weihenstephan;
3. Prof. R. Stückle, Stuttgart.

The results obtained by the measurements during the tests are given in the following surveys:

Capacity tests with some small refrigerators « Autofrigor ».

By Professor P. Ostertag, Winterthur.

Capacity tests: The author in December 1926 at the request of Messrs. Escher Wyss & Co. carried out a series of tests with the principal types of refrigerators, strictly observing the customary rules, in order to obtain as accurate results as possible. All measuring instruments used were calibrated before making the tests (thermometer, gauges and electrical precision apparatus were officially calibrated). The machines used for the tests were

Digitized by Google

taken from the existing stock at random, no part being specially manufactured or altered for the occasion.

The results of the tests made with a first group of five machines are enumerated under Nos. 1 to 5 in the table following hereunder. The mean values of the readings of the last two hours of a continuous test of nine hours duration were taken. The almost constant temperatures permitted of assuming a condition of permanency.

With tests Nos. 1 to 4 the evaporator surfaces were exposed to the current of air produced by a fan; therefore, the cold production may only be calculated as the difference betwen the condenser output and the heat generated in the motor. As these motors are cooled by water, the total heat corresponding to the electric output must be deducted.

The evaporator of the Autofrigor A H (test No. 5) was placed in a brine reservoir, whose contents were heated electrically by resistance coils. By measuring the current input with calibrated precision instruments, the effective evaporator output could, therefore, be directly determined. This was found to be 191.9 watts, equivalent to 658 B. T. U. per hour. Care must thereby be taken that the brine temperature is the same at the end of the test as at the beginning. That was not quite so with test No. 5, inasmuch as the temperature during 2.2 hours rose from 23.9° Fahr., to 24.98° Fahr., i. e. by 1.08° Fahr. or 0.49° Fahr. per hour. For a water value of 132 B. T. U./1° F./hr. for brine and iron, this corresponds to a heating of $132 \times 0.49 = 64.5$ B. T. U./hr., which must be deducted from the above value of the evaporator output (658 B. T. U.).

The radiation losses were determined by a separate test after stopping the refrigerator; they amounted to 3.1 B. T. U. per hour for 1° Fahr. difference of temperature, in total, therefore, to 115 B. T. U./hr., which must be added to the calculated value. The algebraic sum gives an evaporator output of 708 B. T. U./hour, which is approx. 9 per cent higher than that calculated from the condenser output and temperature of motor. Considering the small-size of the refrigerating unit, this difference ascertained by the control may be taken as quite satisfactory.

The values of the evaporator output for 1 kW/hr., as given in the last line of the table, may be called excellent.

Comparing the outputs of the five tests with one another, we find that the small Autofrigor A 500 (test No. 4) produced a few more effective thermal units per 1 kW/hr than did the larger one (test 3). The reason for this is that the efficiency of the motor of the smaller machines is somewhat higher than that of the larger machines because the synchronous speed of the former is 1000 r. p. m., whilst that of the A 1200 type is only 750 r. p. m. Apart from this, the rated output of the motor A 500 lies nearer to the actual energy consumption and finally the hood loss (caused by the above-mentioned hood between the stator and rotor) of the smaller motor is approximately half that of the A 1200. A similar difference exists in the effective output of tests Nos. 1 and 2. Here the Autofrigor A 2000 operates with but one compressor cylinder, whereas A 3000 operates with two, so that the friction losses of the latter are also somewhat greater.

Results of the capacity tests with Autofrigor refrigerators.

No. of test		1	2	3	4	5	6	7	8	9
Type of Autofrigor		A 3000	A 2000	A 1200	A 500	A H	A 2000	A 1200	A 3003	A 1203
Duration of test	min.	135	133	133	132	132	60	60	60	420
Mean temp. in evaporator	°Fahr.	14.20	14.14	15.46	15.12	11.84	9.14	13.46	13.73	—
Mean outside temp.	°Fahr.	61.52	61.52	61.52	61.52	61.52	61.16	61.16	56.30	57.66
Cooling water temp. inlet	°Fahr.	46.40	46.40	46.40	46.40	46.40	82.81	65.43	50.54	50.77
„ „ „ outlet	°Fahr.	68.34	68.57	69.04	69.26	71.0	93.92	79.83	66.00	66.63
„ „ quantity	gals/hr.	77.75	53.50	32.80	13.90	4.10	79.00	43.30	111.66	48.30
Electrical energy input	watts	1095	737.50	571	240	106	940.40	558.10	1138	584
Condenser output	B.T.U./hr.	17056	11864	7440	3180	1012	8760	6240	17280	7680
Heat generated in motor	B.T.U./hr.	3748	2524	1952	820	364	3224	1900	3916	1280
Total evaporator output	B.T.U./hr.	13308	9340	5488	2360	648	5536	4340	13364	6400
Evaporator output per kW/h	B.T.U. hr.	12160	12640	9600	8640	6100	5888	7800	11760	10960

Digitized by Google

Fig. 3. View of the Autofrigor workshops.

In order to ascertain the influence of the cooling water temperatures, two tests were made with the Autofrigors A 2000 und A 1200 employing preheated cooling water. The results of these tests are given under test No. 6 and No. 7 in the above table. The tests prove that the efficiency is still very considerable.

Test No. 8 was performed in the same manner as test No. 5, i. e. the evaporator was immersed in a brine bath heated electrically by means of resistances. The mean temperature of the brine was 18.52° Fahr. The electrical energy supplied was measured and found to be 3643 watts corresponding to 12488 B. T. U./hr. The calorific value to be added due to heating of the brine and radiation losses, and calculated in precisely the same manner as with test No. 5, amounted to 516 and 420 B. T. U./hr. respectively; therefore, the total measured production of cold is 13 424 B. T. U./hr., which compared with the calculated value of 13 364 B. T. U./hr. contained in the table, differs only by 60 units, or 0.45 per cent. I call special attention to this excellent coincidence of the evaporator output determined by the two methods of measurement.

In refrigerating plants with separate compressor, the evaporator capacity is sometimes referred to the indicated horsepower and hour. To enable this calculation being performed here, the efficiencies of the motors employed were ascertained by special brake tests, so that only the mechanical efficiency of the compressors remains to be estimated. For the tests No. 1 and No. 5, for instance, this calculation gives the following values:

Test No.		1	5
Electrical output at the terminals	kW	1.095	0.1061
Efficiency of motor, measured	%	68	50
Output of compressor . . .	HP_e	1.015	0.072
Mechanical efficiency of compressor, estimated .	%	85	70
Indicated output	HP_i	0.865	0.05
Evaporator capacity per ind. HP/hr.	B. T. U.	15 400	12 960

This gives an approximate basis for comparison with other systems, as it is quite impossible to indicate the small totally enclosed cylinders.

A further series of tests is contained under test No. 9 of the table. The values were obtained with an ice producing plant (A 1203) during a seven hours' test, after the plant had already been in service for 48 consecutive hours without interruption. The machine stands in an ice safe containing 25 cubicles of 5.95 lbs. ice content each; an electrically driven stirring mechanism, whose current consumption was measured, serves for the circulation of the brine.

A condition of permanency was established by the hourly withdrawal of so many ice cubicles as were necessary to keep the brine temperature constant, its mean temperature being 23.20° Fahr. The cubicles withdrawn were at once weighed, then thawed, the weight of the discharged ice prisms ascertained, and finally also the weight of the empty cubicles, in order to obtain the losses due to melting.

The measurement recorded 40 blocks of ice of a total weight of 236 lbs in 7 hours (after deducting the loss of 9.7 lbs. due to melting whilst thawing). The brine temperature thereby rose from the beginning to the end of the test from 22.28° F. to 22.82° F. At the water value of 550 B. T. U./1° F. to 22.82° F. brine, tank, stirring mechanism and machine, this is equivalent to 300 B. T. U., corresponding to a quantity of ice of 2 lbs. Taking into account this cor-

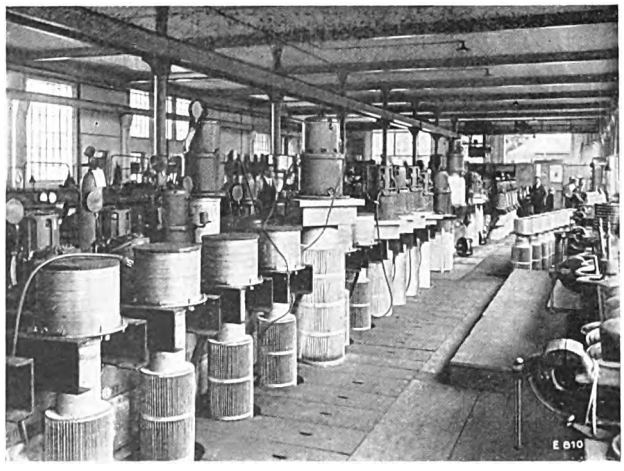

Fig. 4. Testing department for Autofrigor refrigerators.

Digitized by Google

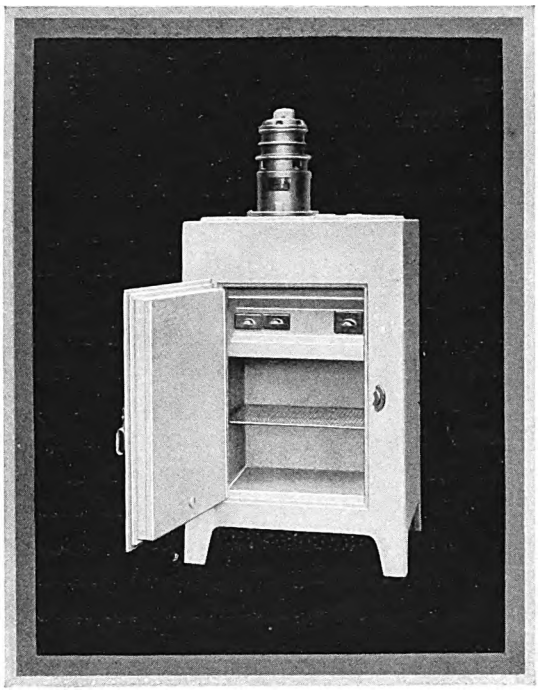

Fig. 5 Household refrigerator „Autofrigor".

rection, the actual quantity of ice produced is 234 lbs. ÷ 7 = 33.44 lbs./hr., or for an energy consumption of 584 watts, the extraordinary output of 57.2 lbs. of ice per 1 kW/hr.

An investigation of the distribution of the heat is possible by means of the heat balance. The effective output of the motor at the shaft must thereby be taken into account, because the motor is air-cooled; likewise the absolute weight of the ice produced including the loss due to melting when thawing the blocks, i. e. a total of 243.54 lbs. or 34.78 lbs./hr. The loss due to radiation was again separately ascertained. We then have:

Heat extraction in the ice 34·78 × 145.6 . .	=	5064 B. T. U./hr.	= 66 %
Cooling down of ice water from 50.77° Fahr. to 32° F. . .	=	660 »	= 8.6 %
Cooling down of ice from 32° F. to 23° F. . .	=	160 »	= 2.1 %
Radiation loss of the tank	=	300 »	= 3.9 %
Heat generation in motor	=	1280 »	= 16.6 %
Deficit compared with condenser output . .	=	216 »	= 2.8 %
Condenser output according to table, column 9		7680 B. T. U./hr.	= 100 %

The small deficit in this heat balance is a criterion for the accuracy of the measurements.

Investigation of the small refrigerator «Autofrigor».

By Professor Dr. W. Redenbacher, Weihenstephan.

Testing the machine.

This refrigerator was tested for the purpose of ascertaining the cold production and power consumption at different brine temperatures. The cold production was, therefore, measured in two different ways:

a) By means of a hot water coil, the temperature in the brine tank was kept constant during the test. The quantity of heat given off hourly by the hot water, increased by the irradiation in the brine tank, corresponds to the evaporator output.

b) A control of this value is possible by determining the cold production by ascertaining the output of the condenser. To obtain the hourly cold production from the condenser output, the heat equivalent of the electrical energy supplied to the driving motor must be subtracted from the hourly heat absorption of the cooling water. As, however, the total electrical energy is not transferred to the water, but a fraction of it is dissipated in heating the motor casing and is there radiated into the surrounding air, the heat equivalent of the total effective current may not be deduced from the condenser output.

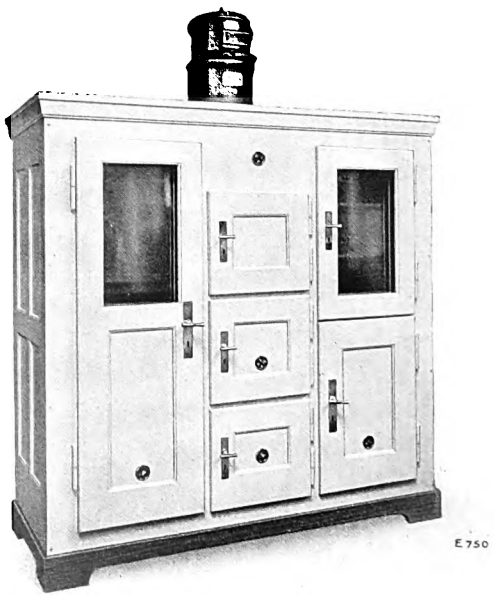

Fig. 6. Autofrigor for dairies.

Digitized by Google

Assuming 70 per cent of the effective electrical energy as reduction, we obtain a very good coincidence at all brine temperatures between the evaporator output and the cold production ascertained indirectly from the condenser.

The effective energy supplied to the driving motor was measured by a calibrated precision wattmeter connected up in one phase. To maintain a uniform temperature in the brine tank, the brine was forced to circulate in the tank during the tests by means of a brine pump. This temperature is relatively high because the heating of the brine in the non-insulated pump and in the piping is high and is increased by the work of the brine pump transformed into heat.

Before commencing each test, the condition of permanency was awaited and above all care was taken that the brine temperature was the same at the beginning and end of each test.

The test results obtained at four different brine temperatures are enumerated in the following table:

Table

Number of test	I	II	III	IV
Duration of test . . . min.	90	140	60	70
Brine temperature . . °F.	37.4	28.6	19.53	12 22
Hourly heat at brine B.T.U./hr.	7752	5996	4496	3496
Hourly irradiation B.T.U./hr.	760	900	1124	1412
Hourly evaporator output B.T.U./hr.	8512	6896	5620	4908
Condenser output. B.T.U./hr.	9904	8384	7236	6236
Effective energy supplied to motor . . . . . watts	708	659	601	582
Motor efficiency	0.7	0.7	0.7	0.7
Electrical energy transferred to cooling water B.T.U./hr.	1704	1588	1448	1400
Cold production calculated from the condenser output B.T.U./hr.	8200	6796	5788	4836
Cold produced by 1 kW/hr. B.T.U./kW-hr	12040	10336	9352	8432
Temperature of inflowing cooling water . . . . °F.	46.4	47.3	46.94	46.94

When judging the quantity of cold produced by 1 kW-hour, it must be remembered that the refrigerator motor worked under adverse conditions during the tests, inasmuch as the voltage was 400 to 406 volts, whilst the winding was designed for the normal three-phase voltage of 380 volts. This resulted in a reduction of the motor efficiency and of the cold production per 1 kW-hour.

The test results prove that the refrigerator «Autofrigor» is an excellent cold generator, which is admirably suited for all cooling purposes of the trades.

Investigation of the capacity of an Autofrigor refrigerator A 2003 for the production of ice as manufactured by Escher Wyss & Co., Lindau, Lake of Constance, executed in the testing department of the firm on the 14th, 15th and 16th of December 1927.

By R. Stückle, Professor at the Technical High School, Stuttgart.

The Autofrigor, which I investigated stood in an ice safe holding 28 cubicles each of 9.24 lbs. content. The brine was kept in circulation by means of a small stirring mechanism direct driven by an electric motor. The brine used had a concentration of 28.5° Beaumé at 23° Fahr. The electrical precision measuring instruments were put at my disposal by the firm and, according to the statement of the firm, carefully calibrated before undertaking the tests. The instruments were connected in such a manner that the current consumption of the main motor and that of the stirring mechanism motor were recorded together.

Before commencing the actual tests lasting from Wednesday December 14th, 9 p. m., to Friday December 16th, 10 a. m., without a break, i. e. 37 hours, the plant had already been in service 12 hours producing ice. The day before, the plant had also operated.

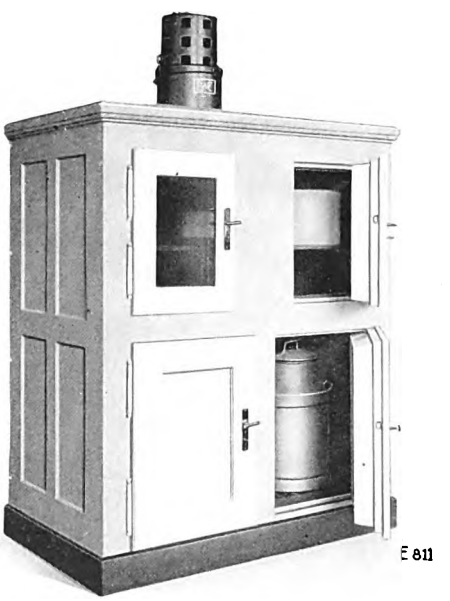

Fig. 7. Autofrigor for dairies

Digitized by Google

During the test lasting 37 hours, the brine temperature could be maintained at a mean temperature of 22.37° F., abstracting from minor fluctuations of a few tenths of a degree in maximum. This was effected by withdrawing 6 cubicles, then 5 cubicles and again 6 cubicles hourly. At the beginning and end of the test the brine temperature was 22.46° F. The ice cubicles withdrawn from the evaporator container were at once weighed including their contents and then thawed in the water reservoir. The net weight of the ice was ascertained by weighing the ice blocks, which had been thawed out of the cubicles. The empty cubicles were then also weighed in order to determine the loss due to melting. The blocks of ice were repeatedly bored to ascertain the temperature inside the ice; the mean temperature varied from 17.6 to 15.8° F.

The results of the continuous test of 37 hours duration are given hereunder:

Mean brine temperature . . .	22.37 ° F.	
Mean temperature of cooling water at inlet	49.82 ° F.	
Mean temperature of cooling water at outlet	68.31 ° F.	
Mean difference of temperature	18.49 ° F.	
Mean quantity of cooling water per hour	63.3	gals./hr.
Mean output of condenser per hour	11 756	B. T. U./hr.
Mean room temperature . . .	57.92 ° F.	
Mean electrical energy supplied, including energy consumed by motor of brine circulating motor	844.2	watts
Mean electrical energy supplied to brine circulating motor alone	49.0	»
Mean electrical energy supplied for driving the compressor .	795.2	»
Mean quantity of ice produced per hour net	53.55	lbs.
Mean net quantity of ice produced per kW/hr.	63.43	»
Mean net quantity of ice produced per kW referred to the work of the compressor $\frac{53.55}{795.2}$	67.32	»
Mean loss due to melting . .	2.71	»
Mean quantity of ice including melting losses per hour . .	56.26	»
Mean quantity of ice including melting losses per kW/hr. .	66.64	»

Fig. 8. Autofrigor brine cooler.

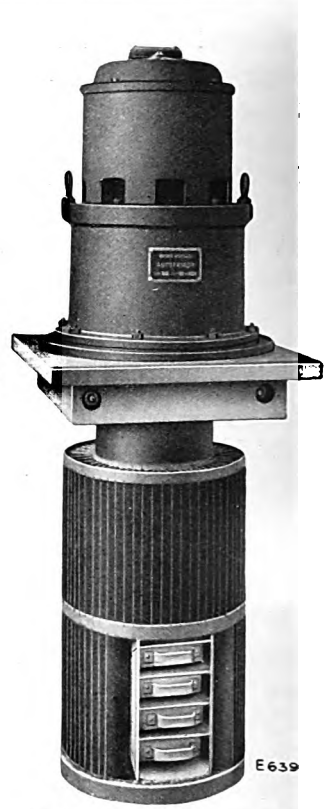

Fig. 9. Autofrigor air cooler with direct ice production.

All readings fluctuated during the test within very narrow and permissible limits.

The results of this test are exceedingly good. They considerably surpass the results formerly ob-

Fig. 10. Autofrigor cooling plant for a sanatorium

Digitized by Google

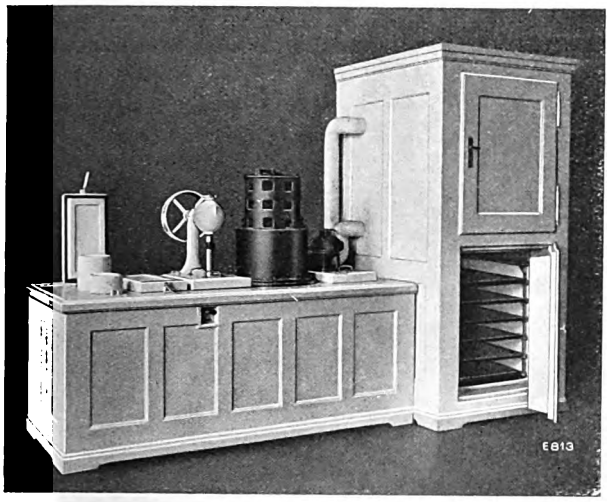

Fig. 11. Autofrigor, type A 1203, with safe for ice production, machine for ice cream production and cooling safe.

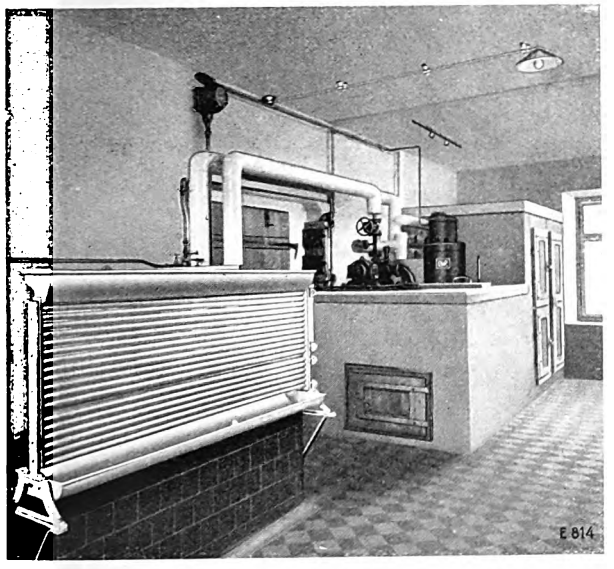

Fig. 12. Autofrigor cooling plant for cheese dairies.

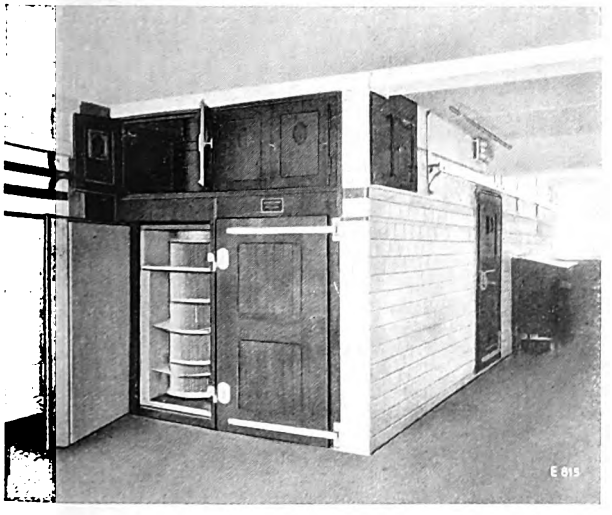

Fig. 13. Autofrigor cooling plant for butchers.

tained with a smaller refrigerator, viz. 57.2 lbs. of ice per 1 kW/hr. Compare the report of Prof. P. Ostertag, Winterthur, on: «Capacity tests with some small refrigerators Autofrigor» published in the «Zeitschrift für die gesamte Kälteindustrie», 1927, Number 5.

The automatic refrigerator «Autofrigor», owing to its simple design, easy handling and reliability in service, and because it is designed not only for ice production and cooling of brine but also for cooling of air, is well suited for all kinds of room cooling, especially for hotels, confectioners, butchers, dairies and all branches of the foodstuff trade.

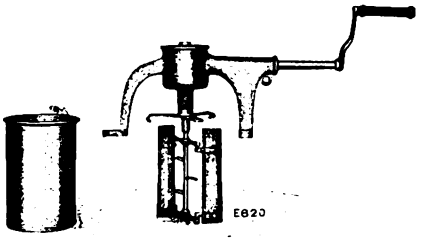

Fig. 14. Ice cream machine taken apart.

The «Autofrigor» is manufactured in series. Fig. 3 is a view of the workshops and Fig. 4 illustrates the testing department, in which each single machine is tested as to its rated output before leaving the works. Fig. 5 shows the latest model of the household refrigerator with Autofrigor. This refrigerator satisfies all needs of a household and is a perfect substitute for the old time «ice safe» hitherto used. The Autofrigor refrigerator keeps foodstuffs fresh for weeks at a temperature of from 35.6 to 39.2 ° Fahr. and apart from this offers the advantage that

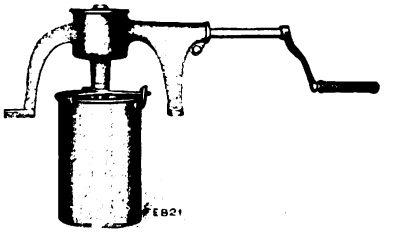

Fig. 15. Ice cream machine assembled.

2¼ lbs. of ice in small cubes may be made of pure potable water daily, which may be used for all kinds of iced drinks, etc. The very latest models are even equipped with a small machine with which ice creams may be made. Figs. 14 and 15 illustrate this machine as such, whilst Figs. 16 and 17 show the machine mounted in the refrigerator. The latest models are also equipped with air-cooled instead of water-cooled motors so that only a con-

Digitized by Google

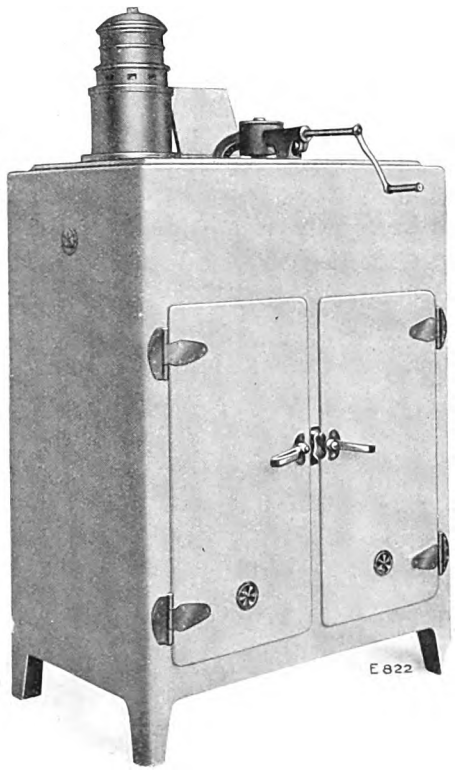

nection with the electric light mains is needed to operate this household refrigerator. All types of Autofrigors can be supplied with thermal regulating devices, which automatically start and stop the Autofrigor once or twice a day and keep the temperature constant within certain limits, if desired by the customers. The larger Autofrigor refrigerators have water-cooled condensers, because with air-cooling the power consumption is greater than with water-cooling and the refrigerators would, therefore, operate uneconomically. The extreme simplicity of the Autofrigor together with its high economy have made it possible for Messrs. Escher Wyss & Co. to sell far more than 10 000 Autofrigor refrigerating plants within a few years. In conclusion it should be noted that the Autofrigor is manufactured in a number of sizes for room cooling, ice production, or room cooling and simultaneous ice production, and is, therefore, very suitable for hotels, butchers, dairies, grocers, restaurants, confectioners, etc. Figs. 6 to 13 and 18 illustrate such refrigerating plants executed by Messrs. Escher Wyss & Co.

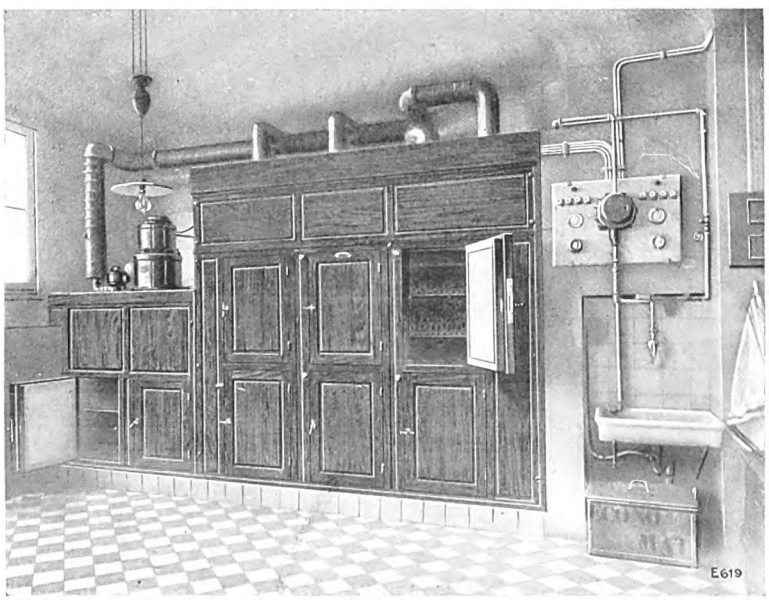

Digitized by Google

Miscellaneous.

Since our last report in the "Escher Wyss News" No. 2 of March 1928, the different departments of our works have received a number of orders, some of which are enumerated hereunder,

Steam turbine department.

Electrica Societate Anonima Romani, Bucaresti, for the Campina plant
1 5100 HP Steam turbine at 3000/1500 r.p.m., 170 lbs/sq. in. pressure, 590 ° F.

Fusi Denki Seizo K. K. Kawasaki, for the Tokuura plant
1 2900 HP steam turbine at 3600 r.p.m., 173 lbs/sq. in. pressure, 536 ° F.

Fusi Denki Seizo K. K. Kawasaki, for the Tsukumi plant
1 3650 HP steam turbine at 3600 r.p.m., 200 lbs/sq. in. pressure, 590 ° F.

N. V. Provinciale Geldersche Electriciteits Maatschappij Arnhem, for the Nijmegen plant
2 28650 HP steam turbines at 3000 r.p.m., 285 lbs/sq. in. pressure, 662 ° F.

Ilse Bergbau A.-G., Gross-Räschen, for Grube Renate plant
2 950 HP steam turbines at 9000/3800 r.p.m., 170 lbs/sq. in. pressure, 527 ° F.

S. A. Cotonificio Bustese, Busto-Arsizio, for Busto plant
1 1530 HP steam turbine at 7500/3000 r.p.m., 455 lbs/sq. in. pressure, 752 ° F.

Sofina, Ixelles-Bruxelles, for Lisbon plant
1 18000 HP steam turbine at 2520 r.p.m., 200 lbs/sq. in. pressure, 526 ° F.

Soc. Egyptienne de Ciment Portland, Tourah le Caire, for Tourah plant
1 3650 HP steam turbine at 6000/3000 r.p.m., 312 lbs/sq. in. pressure, 707 ° F.

Siemens-Schuckertwerke, Berlin, for Guatemala plant
2 950 HP steam turbines at 6000/1000 r.p.m., 213 lbs/sq. in. pressure, 572 ° F.

Fusi Denki K.K., Kawasaki, for Anzan Steel Works
1 5520 HP steam turbine at 3100 r.p.m., 190 lbs/sq. in. pressure, 553 ° F.

Novaseta A.-G., Arbon, for Arbon plant
1 1470/1335 HP steam turbine at 7500/3000 r.p.m., 170 lbs/sq. in. pressure, 572 ° F.

Synthetic Ammonia and Nitrates Ltd., Stockton, for Norton plant
2 3685 HP steam turbines at 3100 r.p.m., 250 lbs/sq. in. pressure, 563 ° F.

Soc. d'Électricité de la Basse-Loire, St. Nazaire, for St. Nazaire plant
1 5800 HP steam turbine at 4500/1500 r.p.m., 200 lbs/sq. in. pressure, 572 ° F.

Comp. Générale de Railways et d'Électricité, Bruxelles.
7 8300 HP steam turbines at 3000 r.p.m., 170 lbs/sq. in. pressure, 572 ° F.

J. G. Farbenindustrie A.-G., Bitterfeld, for Bitterfeld plant
1 21400 HP steam turbine at 3000 r.p.m., 263 lbs/sq. in. pressure, 752 ° F.

Stedelijke Fabrieken van Gas and Electriciteit, Leiden, for Leiden plant
1 17500 HP steam turbine at 3000 r.p.m., 280 lbs/sq. in. pressure, 662 ° F.

Water turbine department.

Laufenburg Power Station
2 13500 HP horizontal Francis turbines, head 39.5 ft., 125 r.p.m.

Ryburg-Schwörstadt Power Station
1 39500 HP vertical Kaplan turbine with concrete spiral casing, head 38 ft., 75 r.p.m.

Soc. Hydro-Electr. de la Diège, Paris
1 9100 HP vertical Francis turbine, head 432.5 ft., 500 r.p.m.

Cia. Agricola y de Fuerza Eléctrica del Rio Conchos, for Boquilla plant
Reconstruction of 4 horizontal twin turbines, each for an output of 10000 HP under a head of 225 ft., 360 r.p.m.

A. S. Saudefaldene, Oslo, for Sauda plant
2 34000 HP vertical Francis turbines, head 809 ft., 500 r.p.m.

Rhein-Main-Donau A. G. Munich, for Klingenberg plant
2 2870 HP Kaplan turbines; diameter of runner wheels 14.6 ft.; head 12,5 ft., 68.2 r.p.m.

Siemens Schuckertwerke, Berlin, for Affoldern plant
1 3410 HP Kaplan turbine, head 30 ft., 187.5 r.p.m.

Spinnerei u. Weberei Steinen A. G. (Repeat order)
1 381 HP Kaplan turbine, head 16.5 ft., 300 r.p.m.

Aggertalsperrengenossenschaft Dümmlinghausen
2 1745 HP horizontal Francis turbines, head 148.5 ft., 750 r.p.m., 1 520 HP vertical Kaplan turbine, head 35 ft., 428 r.p.m.

Ueberlandzentrale Meseritz (Repeat order)
1 612 HP vertical Kaplan turbine, head 22 ft., 250 r.p.m.

Städt. Werke Landshut (Repeat order)
1 460 HP vertical Francis turbine, head 9¼ ft., 66.7 r.p.m,

Soc. hydro-électrique du Verdon Paris
2 403 HP twin Francis turbines, head 30 ft., 428 r.p.m.

A. E. G. Berlin for Algiers plant (Repeat order)
1 4500 HP Francis turbine.

Digitized by Google

Compressor department

This department received an order from the A. S. Rjukanfos in Oslo for the new nitrogen works for the supply of 2 turbo-compressors each for oxygen and hydrogen. These machines are of special interest because they are driven by Pelton turbines over toothed wheel gears, the turbines also beeing manufactured in our works. The machines are controlled by specially designed regulators. The same firm also ordered 2 high-pressure turbo-compressors for air, each for an output of 2000 HP. These compressors are driven by electric motors likewise over toothed wheel gears.

The I. G. Farbenindustric A.-G. in Ludwigshafen ordered a high-pressure compressor for air.

The Municipal Gas Works of Berne gave us an order for a turbo-blower for increasing the gas pressure. The machine will be equipped with a special regulator, which automatically adjusts the gas pressure according to the consumption in the network.

The same problem was solved by us for the Schlieren plant of the Zurich Municipal Gas Works.

Of the 5 large compressors driven by steam turbines and ordered by the Synthetic Ammonia & Nitrates Ltd. in Billingham, which were mentioned in our "Escher Wyss News" No. 2 of March 1928, the first two units have been operating for 8 months. The official acceptance tests were performed last summer and turned out very satisfactory for both parties concerned. We had spared no pains to ensure the complete success of this plant, every item of which presented novel features, and we succeeded in obtaining considerably higher efficiencies than guaranteed, both for the compressors and turbines. The average of the different guarantee values resulted in an improvement by 13 per cent so that after deducting the margin of 5 per cent, a premium of 8 per cent of the value of the delivery was paid us according to the stipulations o the contract, The saving in coal for the client is a multiple of this premium.

The same Company ordered two considerably larger compressors with the requisite steam turbines, which will operate in connection with concentration plants for artificial fertilizer salts.

The firm of Fusi Denki Seizo K. K., in Kawasaki placed an order for a large blast furnace turboblower destined for the Anzan Steel Works. The capacity of this blower is 44480 to 60000 cub ft. per minute at a pressure of from 18 to 30 lbs/sq. in. The driving turbine has an output of from 3500 to 6000 HP.

Paper-making machinery department.

This department has also received several interesting orders, of which may be mentioned:

Fabrica de Hârtie „Busteni" C. & S. Schiel-Ssori. Busteni

1 Chemical pulp drying machine to be erected in the new Chemical Pulp Works Piatra-Neamt.

Enrico Magnani, Cartiere a mano in Pescia, Tuscany. 1 Banknote paper machine for the manufacture of watermark papers and fine cardboard in sheets or rolls. Fifty years ago we supplied this firm the complete mill equiqment, which is now being supplemented by modern machinery,

The S. A. Fratelli Barzano, Castelli Calepio, Bergamo, gave an order for the complete machinery for the production of presspan board.

For the Cartiera Ambrogio Binda Corso Pta Romana 13, Milan we supplied 6 Huber beaters of the type exclusively used by this firm.

The banknote paper machine mentioned in "Escher Wyss News" Number 2, 1928, and destined for the firm of Gebrüder Ebart in Spechthausen, has meanwhile been put into service.

In Italy and Brazil a number of our Yankee machines were put into service a short while ago; in Italy two complete equipments for wood pulp grinding mills were started up.

Finally this department was entrusted with the reconstruction and enlargement of a number of existing machine plants at home and abroad.

Pump department.

Amongst the orders received by this department may be mentioned: 2 large low-pressure pumps for the Egyptian Government for the Mex Pumping Station; capacity for each pump 190 gallons per second.

For the second instalment of the Schwarzenbach Works an order was given for an 18000 HP water storage pump. This pump will be equipped with our patented guide blade regulating mechanism by means of which we obtained the excellent results with the first pumping unit supplied to this works, published in "Escher Wyss News" Number 3, 1928.

Digitized by Google

Boiler department.

Some of the orders received by this department are enumerated hereunder:

For the Stückfärberei in Zurich

1 high-pressure boiler of 2140 sq. ft. heating surface and 500 lbs/sq. in. pressure, including mechanical stoker, superheater, and gilled tube economiser of 2460 sq. ft. heating surface.

For a plant in Reval (Esthonia)

1 complete boiler house plant with 2 boilers, each of 1070 sq. ft. heating surface and 50; lbs/sq. in. pressure, including special inclined grates, superheater and gilled tube economiser.

For the Laiteries Réunies Genève

1 complete boiler house plant with 2 Cornish boilers, each of 590 sq. ft. heating surface, 142 lbs/sq. in. pressure, with gilled tube economiser of 1070 sq. ft. heating surface common to both boilers.

For the Soc. Egyptienne de Ciment Portland, Tourah le Caire

A third Garbe boiler of 2195 sq. ft. heating surface and 340 lbs/sq. in. pressure, including mechanical stoker, superheater and Green economiser,

For the Municipal Gas Works Zurich in Schlieren

1 Tar tank of 35300 cub. ft. content; diameter 30 ft. height 51 ft.

For the Municipal Gas Works Constance

2 high-pressure gas accumulators, each of 4415 cub. ft. content and 71 lbs/sq. in. pressure. Diameter of the accumulators 10½ ft., length over hemispherical headers 58 ft. The accumulators are completely welded, will be erected in Stein on Rhine and serve for the long-distance gas supply of this town.

For the Weinfelden Gas Works

1 similar accumulator of 3530 cub. ft. content and 71 lbs/sq. in. pressure.

For Brazil

2 Electrode boilers, each of 1000 kW capacity at 5250 volts, executed in cooperation with the Maschinenfabrik Oerlikon.

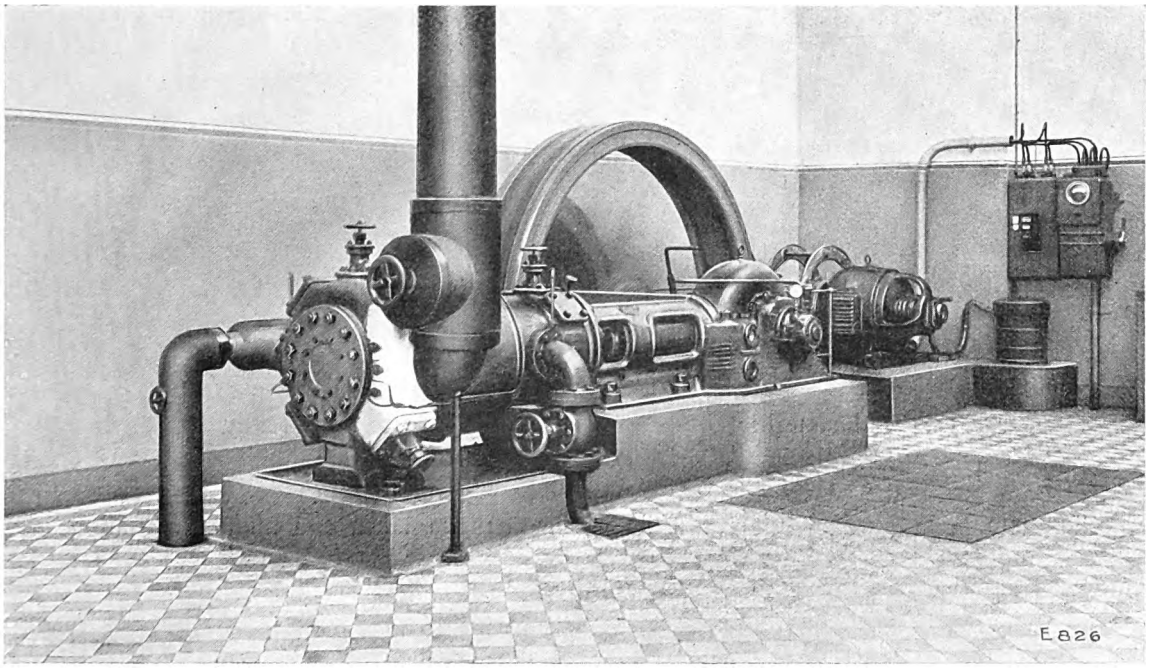

Refrigerating plant of the "Usine de Rhône", with compound compressor of 800000 B.T.U.-hr. capacity.

Digitized by Google

Products of Messrs. Escher Wyss & Co.

Steam Turbines

"Zoelly" system

Normal condensing land and marine turbines; locomotive turbines; bleeder turbines; back-pressure turbines; mixed-pressure turbines; low-pressure turbines; small turbines; high-pressure turbines; condensing and preheating installations.

Steam Boilers

Electrically heated boilers; horizontal fire tube boilers; Cornish boilers; marine boilers; water tube and vertical tube boilers; boiler work of every description.

Compressors

High-pressure turbo-compressors for mines and other purposes; turbo-blowers for blast furnaces; converter plants for steel works; coke oven blowers; special gas blowers for the chemical industry. Completely automatic regulators for constant pressure, constant volume and other purposes, automatic blow-off regulators; volume integrators etc.

Autovapor Compression and Concentrating Plants

Special turbo-compressors for water vapour; automatic vapour pressure regulators; apparatus for neutralizing vapours.

Water Turbines

with Francis, Pelton, propeller and Kaplan wheels. Complete high-pressure pipelines. Rotary valves. Precision oil-pressure governors.

Pumps

Equipment and installations for complete waterworks. High-pressure and low-pressure turbo-pumps, water storage pumps.

Paper-making Machinery

Installations for complete paper mills; paper-making machines of every descri tion and for every working width; digesters; beaters; edge runners; pulp grinders.

Waste Utilization Plants

for carcases and slaughter house offal; fish meal factories for any capacity.

Ships

Complete paddle wheel boats and screw steamers for lakes and inland navigation.

Gears

Variable speed gears with high efficiency and large and constant range of regulation.

Publishers: Escher Wyss & Co., Zurich (Switzerland).
Printed by: Siegfried & Co., Zurich (Switzerland).
London Office: Escher Wyss & Co., 20 Grosvenor Gardens, Westminster, London S. W. 1.
Tokyo Office: Escher Wyss & Co., Marunouchi Building, Room 322, Tokyo.

Digitized by Google

ESCHER WYSS NEWS

Volume 2

1929

INDEX

Published by Escher Wyss & Co. S.A.

1929

AGENTS FOR UNITED STATES
THE NATIONAL POWER MACHINERY CORP.
[illegible] CHANIN [illegible] NEW YORK

Digitized by Google

INDEX

Escher Wyss News

Volume 2

1929

●

Index of authors

Page

Bauer H.: The Osaka Water Works (Kunijima Central Station). The largest and most modern pumping plant in Japan 43

Bertschinger E.: The control, adjustment and trial runs of universal oil-pressure governors on the test bed 221

Egg: Modernizing old governors in the Weidest Works, Altstätten 219

Gagg A.: The development and the performance of modern Escher Wyss & Co. turbine governors . 205

The governors of the Eguzon plant 215

Geussenhainer R.: The development of propeller and Kaplan turbines 123

Grossmann G.: Grating cleaning machines . . 73

Haller de, P.: The calculation of pressure surges in pipelines 89

Hüllmann H.: Automatic water power plants . . 27

Irminger R.: The refrigerating plant for the restaurant of the "Grands Magasins du Printemps" in Paris 112

The refrigerating plant for the sanatorium "du Midi" in Davos-Platz 119

Jaquet Dr. E.: Governor guarantees 195

Jung O.: A modern combination cardboard-making machine 83

Fourdrinier paper-making machine for high-class papers 137

The crowning of couch press and wet press rolls 190

Mettler D.: Refrigeration in the fruit juice industry 102

Moser J.: New large water turbine plants . . . 3

Page

Nyffenegger H.: The Zoelly steam turbo-locomotive (Conclusion) 46

Oscillations in the driving mechanism of turbo-locomotives 145

Obrist H.: The development of the water turbine thrust bearing 20

Peter R.: Plant for salt works 175

Quiby H.: Modern marine turbines of small outputs 58

Comparison between a steam turbine and a reciprocating engine as prime mover for paddle wheel tugs 65

Rinderknecht E.: Turbine governing mechanism for remote-controlled water power plant Buchs-Altendorf 99

Scholl G.: The Shannon power station in Ireland 167

Sonderegger A.: The electrically-welded pressure pipeline of the Terni-Galleto power station . . 159

Steinmann W.: The new carcase and offal utilization plant of the City of Cologne 156

Apparatus for treating fish offal 187

Stucki F.: Modernizing old governors in the Augst power station 217

Weber R.: Modernizing old governors in the Robbia plant 218

Wiederkehr R.: The thickness of the walls of rectangular hollow bodies 51

Winkler W.: The hydro-electric power station of Akanogawa I 155

Wintsch E.: The "Autofrigor" refrigerating plant in the "Grand Hôtel du Lac", Lucerne 152

List of our offices and agents . . . . . page 79

Stodola Festival Book . . . . . page 120

Digitized by Google

Index of subjects

Page

Autovapor plants: Plant for salt works. By R. Peter 175

Locomotives: The Zoelly steam turbo-locomotive (Conclusion) By H. Nyffenegger 46

Oscillations in the driving mechanism of turbo-locomotives. By H. Nyffenegger 145

Marine turbines: Modern marine turbines of small outputs. By H. Quiby 58

Comparison between a steam turbine and a reciprocating engine as prime mover for paddle wheel tugs. By H. Quiby 65

Paper-making machines: A modern combination cardboard-making machine. By O. Jung . . 83

Fourdrinier paper-making machine for high-class papers. By O. Jung 137

The crowning of couch press and wet press rolls. By O. Jung 190

Refrigerating machines: Refrigeration in the fruit juice industry. By D. Mettler 102

The refrigerating plant for the restaurant of the "Grands Magasins du Printemps" in Paris. By R. Irminger 112

The refrigerating plant for the sanatorium "Du Midi" in Davos-Platz. By R. Irminger . . . 119

The "Autofrigor" refrigerating plant in the "Grand Hôtel du Lac" Lucerne. By E. Wintsch . . . 152

Steam boilers: The thickness of the walls of rectangular hollow bodies. By R. Wiederkehr 51

Steam turbines: Comparison between a steam turbine and a reciprocating engine as prime mover for paddle wheel tugs. By H. Quiby . 65

The Osaka Water Works (Kunijima Central Station). The largest and most modern pumping plant in Japan. By H. Bauer 43

Waste utilization plants: The new carcase and offal utilization plant of the City of Cologne. By W. Steinmann 156

Apparatus for treating fish offal. By W. Steinmann 187

Page

Water turbines: New large water turbine plants. By J. Moser 3

The development of the water turbine thrust bearing. By H. Obrist 20

Automatic water power plants. By H. Hüllmann 27

Grating cleaning machines. By G. Grossmann 73

The calculation of pressure surges in pipelines. By P. de Haller 89

Turbine governing mechanism for remote-controlled water power plant Buchs-Altendorf. By E. Rinderknecht 99

The development of propeller and Kaplan turbines. By R. Geussenhainer 123

The hydro-electric power station of Akanogawa I. By W. Winkler 133

The electrically-welded pressure pipeline of the Terni-Galleto power station. By A. Sonderegger 159

The Shannon power station in Ireland. By G. Scholl 167

Governor guarantees. By Dr. E. Jaquet . . . 195

The development and the performance of modern Escher Wyss & Co. turbine governors. By A. Gagg 203

The governors of the Eguzon plant. By A. Gagg 215

Modernizing old governors by adopting new actuators:

a) Augst Power station. By F. Stucki . . . 217

b) Robbia plant. By R. Weber 218

c) Weidest Works Altstätten. By Dir. Egg . . 219

The control, adjustment and trial runs of universal oil-pressure governors on the test bed. By E. Bertschinger 221

Welding: The electrically-welded pressure pipeline of the Terni-Galleto power station. By A. Sonderegger 159

List of our offices and agents . . . . . page 79

Stodola Festival Book . . . . . page 120

Digitized by Google

Digitized by Google

ESCHER WYSS NEWS

Volume II

1

Jan.-Feb. 1929

Published by Escher Wyss & Co. S. A.

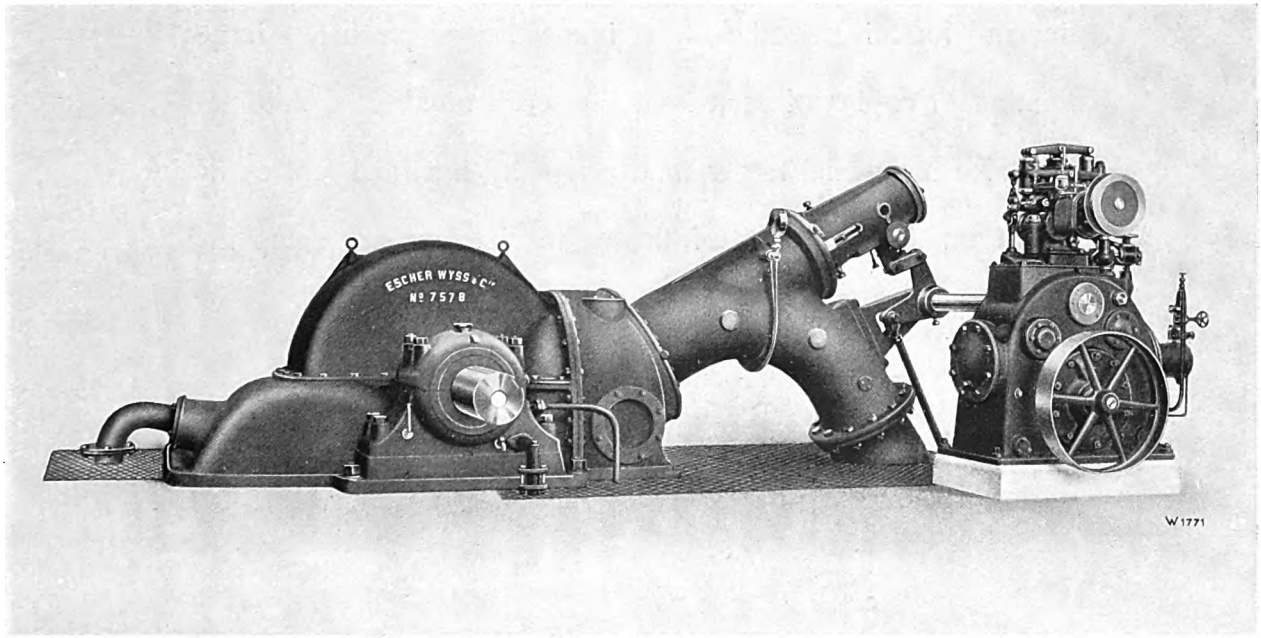

Power station Burglauenen (Switzerland) — 2900 HP Pelton turbine at 500 r. p. m.

Contents

Page

(1) **New large turbine plants** 3

(2) The development of the water turbine thrust bearing 20

(3) Automatic water power plants 27

AGENTS FOR UNITED STATES
THE NATIONAL POWER MACHINERY CORP.
2912 CHANIN BLDG., NEW YORK

Digitized by Google

VOLUME II.

The exceedingly friendly reception, which has been accorded our "Escher Wyss News" in all circles and the increasing demand for this periodical have induced us to produce a larger number of copies of each issue. As each number of Volume I was also somewhat larger than originally intended and as the future numbers will be of the same size, we are compelled to increase the price as from January 1st 1929 for

Single numbers to . . 1/6
Annual subscription to 7/6
} post free.

ESCHER WYSS & Co.

Digitized by Google

ESCHER WYSS NEWS

PUBLISHED BY MESSRS. ESCHER WYSS & Co. S. A.

VOLUME 2 — No. 1 — JAN.-FEB. 1929

The "Escher Wyss News" will be published periodically in bi-monthly issues. Reprinting of articles or illustrations appearing therein will only be permitted when source thereof is duly acknowledged. Single numbers 1/6; one year's subscription 7/6.

New large water turbine plants.

By J. Moser.

In Number 2/1928 of our «Escher Wyss News» we published a short article dealing with some interesting new turbine constructions and reconstructions, *) which we will now supplement by a short description including illustrations of further modern turbine plants. The plants in question have all been executed in Escher Wyss & Co.'s Zurich works within the last five years and meanwhile been put into service. Though we have confined ourselves to the most interesting plants, this article will give the reader a good idea of the different types, their construction and general arrangement.

Aarau Plant: The Jura Cement Works in Aarau own an old turbine plant, situated about 1/3 mile from the suspension bridge over the river Aare, which receives its water supply through a canal running alongside. The machine house is located between extensive factory buildings and the possibility of enlarging it is hampered by lack of room. Nevertheless the owners obtained a concession for the extension of their water power plant and imposed upon the designer the task of providing the largest possible amount of power within the space available. Extensive caisson work, Fig. 1, was necessary to provide for the foundations of the new power house, which adjoins the old station and which was to begin with to be equipped with two turbines designed for the following data:

Net head	H =	11¼ to 13¼ ft.
Water volume	Q =	1553 to 2042 cub. ft./sec.
Output	N =	1680 to 2100 HP.
Speed	n =	93.8 r. p. m.

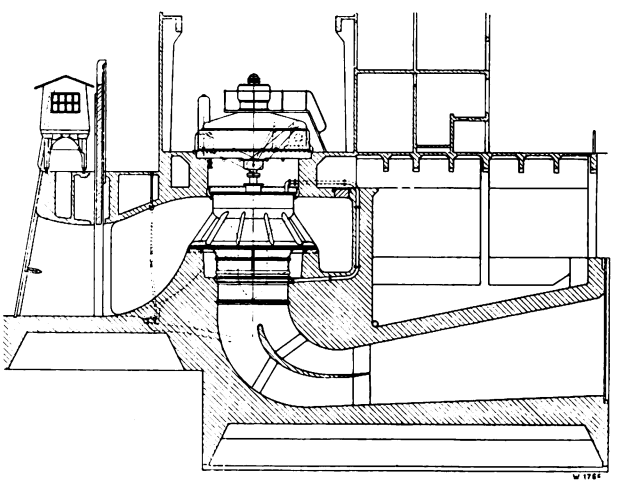

Fig. 1.

The very limited room available led to the choice of a Kaplan turbine with fixed blades, conical guide apparatus and water supply through a spiral concrete casing, Fig. 2. The turbine has a vertical shaft, the three-phase generator is direct coupled, the regulating mechanism is located outside the machine. The diameter of the runner wheel is 11½ ft. and the four cast-steel blades are bolted

*) "Interesting new turbine constructions and reconstructions" by E. Seitz.

AGENTS FOR UNITED STATES
THE NATIONAL POWER MACHINERY CORP.
2912 CHANIN BLDG., NEW YORK
Digitized by Google

Digitized by Google

design used in Europe, inasmuch as the distribution of the load is central requiring less concrete work.

Nevertheless, care must be taken that the one-sided deformation of the spiral casing under water

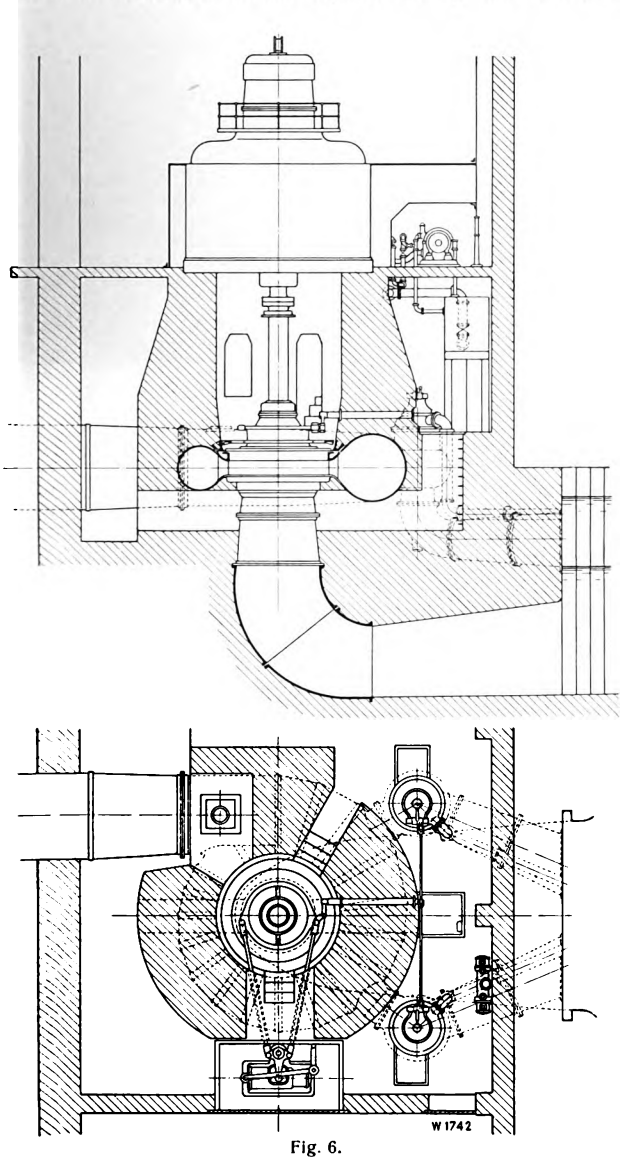

Fig. 6.

pressure is not transmitted to the concrete cone and that the casing is left free to expand in all directions. There are two possibilities of achieving this; either the concrete cone is carried beyond the casing under pressure, or, if this is not possible, flexible plates must be placed over the casing.

It is obvious that the central ring must be of very strong design in order to be able to transmit the considerable load to the foundations. To take up these stresses, a second ring of special shape is arranged over the central ring, to which are fastened the necessary anchorages and which firmly grips the concrete, Fig. 7.

The turbine as such is designed on the most modern lines; it is equipped with a guide apparatus for external regulation, exchangeable protecting rings, a cast-steel runner wheel with exchangeable

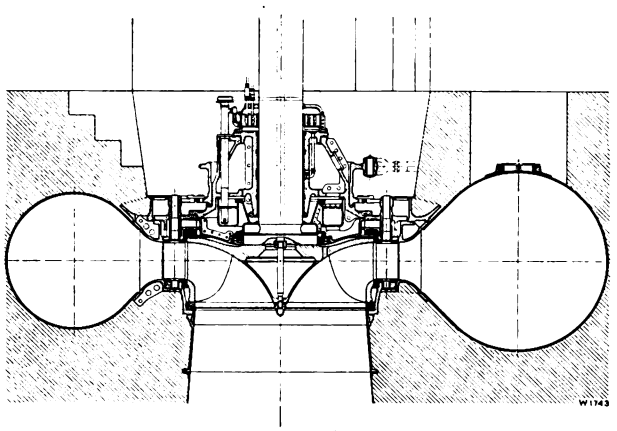

Fig. 7.

labyrinth packings, a guide bearing with independent oil circulation, two pressure regulators connected to the spiral casing and a complete speed governing mechanism operated by oil under pressure and whose control gear is placed in the generator room, whilst the servomotor is located near the turbine pit.

The plant is in course of erection and will be put into service in Spring 1929.

Seto Plant (Japan). The above-mentioned Japanese Company in 1922 ordered from Messrs. Escher Wyss & Co., four vertical shaft Francis spiral turbines for the Seto station, designed for the following data:

H = 336 ft.
Q = 206 gals./sec.
N = 11 000 HP.
n = 400 r. p. m.

The design of the units as illustrated in Fig. 8, shows that the whole lay-out has to a great extent been influenced by the highly fluctuating water level of the tail race, which made it necessary to arrange the generator floor above the maximum water level of the tail race. Each turbine is provided with its own penstock, in which is inserted an Escher Wyss patent rotary valve. The draught tube is of the Prasil type. The cast-iron spiral casing, built in two parts, is provided with a cast-steel central ring, Fig. 9. The guide apparatus is designed for external regulation and is equipped with exchangeable protective rings. The bearing is automatically lubricated by means of a worm-shaped oil pump.

Digitized by Google

The speed governor and the pressure oil pump, driven by a small water turbine, are situated on the generator floor, whilst the pressure regulator, which prevents excessive pressure surges, is connected

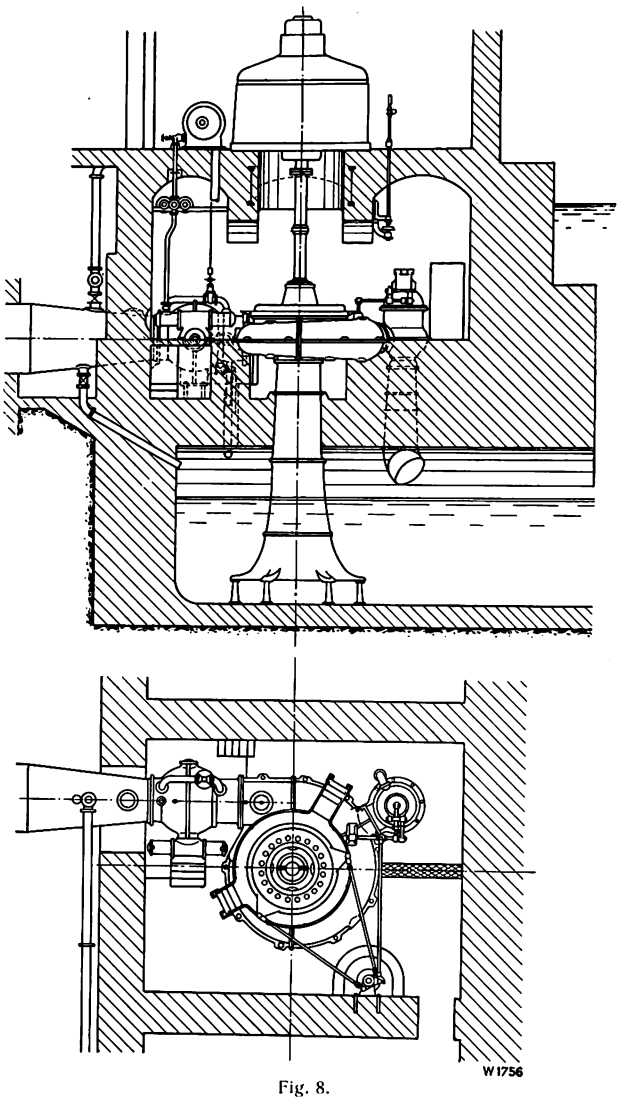

Fig. 8.

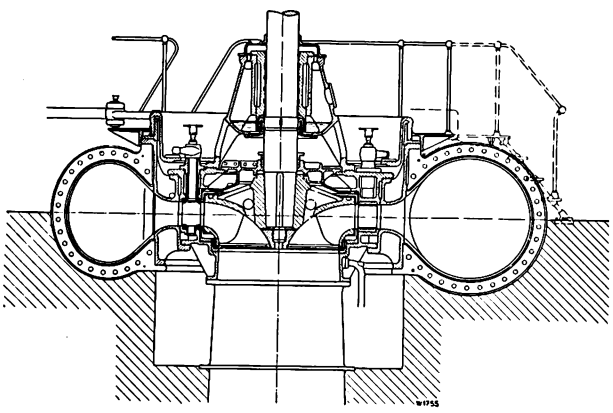

Fig. 9.

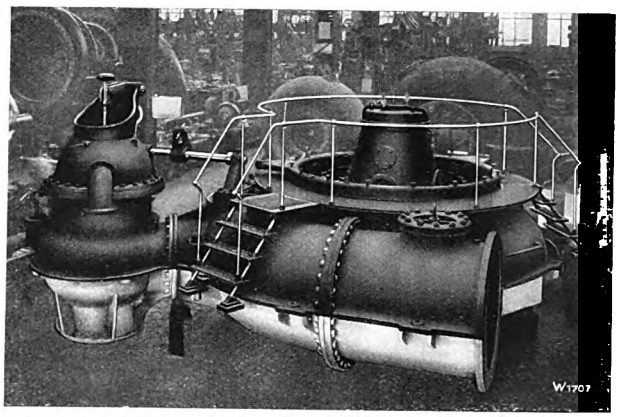

Fig. 10.

with the casing, Fig. 10. A separate 150 HP Pelton turbine provides the electric current required in the station.

The plant has been in operation since 1924 and has given every satisfaction.

Kamikuya Plant. This plant is similar to the one just described and was ordered from Messrs. Escher Wyss & Co. in 1922 by the Japanese Power Company Tokyo Dento K. K. in Tokyo. The station contains three units constructed for the following data:

H = 375 ft.
Q = 189 gals./sec.
N = 11 000 HP.
n = 500 r. p. m.

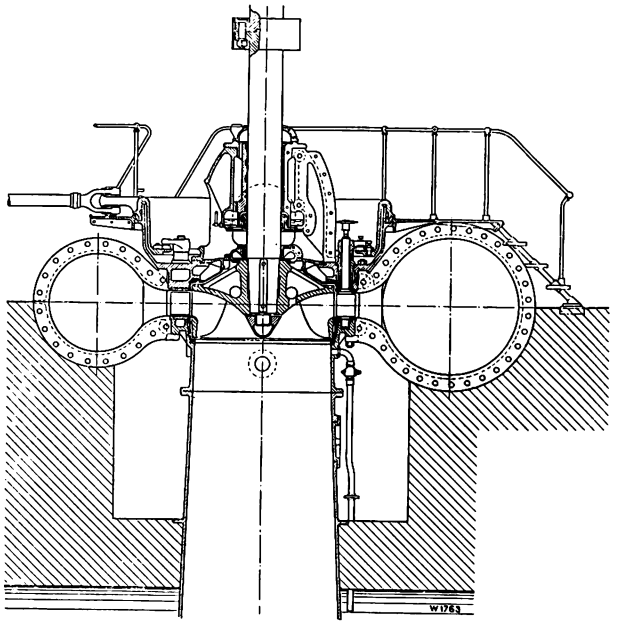

Fig. 12.

Digitized by Google

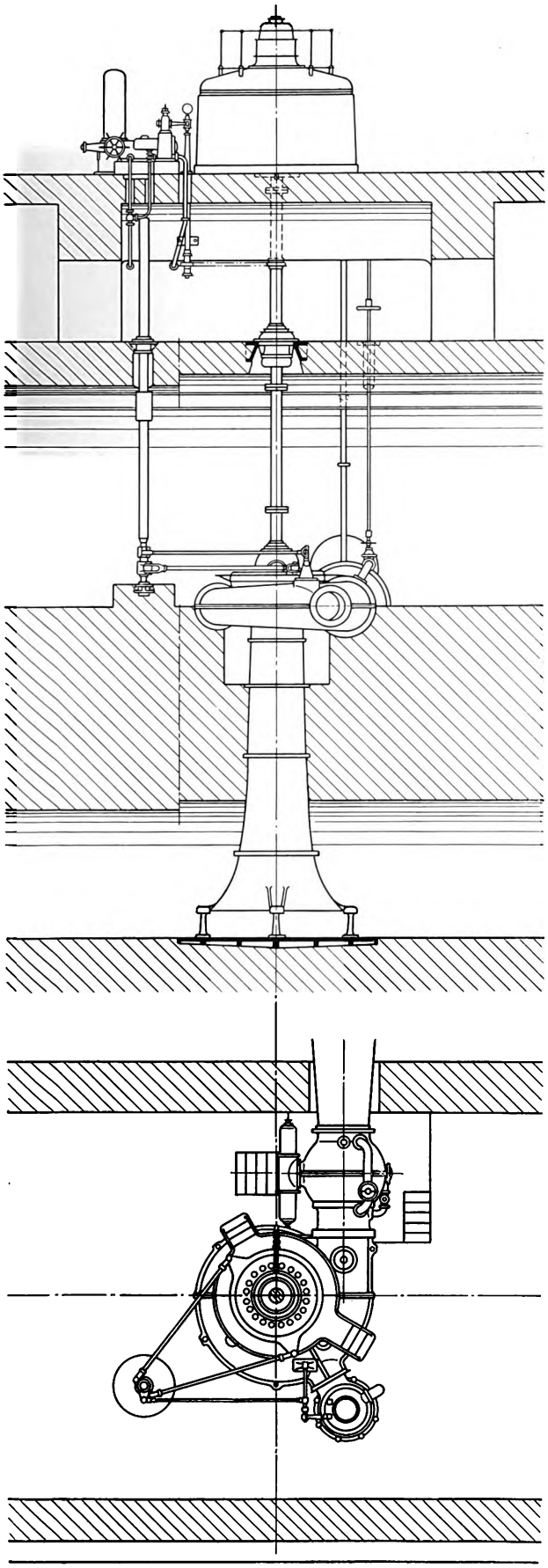

Fig. 11.

The elevation, Fig. 11, illustrates the vertical shaft Francis spiral turbine with extended shaft and intermediate floor. This exceptionally high design, which rendered the provision of an intermediate bearing necessary had to be chosen in view of the special river conditions. Each turbine has an

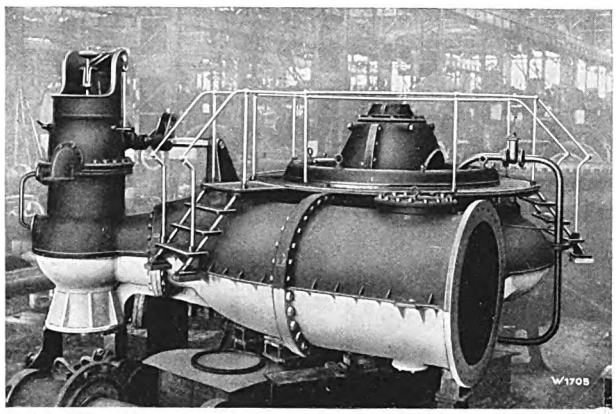

Fig. 13.

independent penstock fitted with rotary valve; a cast-steel spiral casing made in two halves with pressure regulator; a Prasil draught tube with special reinforcement of the bottom section accessible at the top. The design of the turbine proper, Fig. 12, is very similar to that of the Seto plant, however, the turbine shaft is subdivided owing to the difficulties of dismantling caused by the intermediate floor. Each bearing is equipped with an independent lubricating device. The oil pressure regulator, the oil pump with air vessel and driving turbine, and the control mechanism of the rotary valve are situated on the generator floor, whence a strong regulating shaft leads to the turbine room and there establishes the connection with the regulating ring. In spite of this somewhat complicated arrangement, the manipulation of the plant is extremely simple and completely centralized in the generator room. Fig. 13 is a photograph of the turbine taken in the workshops of Messrs. Escher Wyss & Co. The plant has been in continuous operation since 1924 and has given every satisfaction.

Yanagawara plant. This power station, built by the above-mentioned Japanese Company Nippon Denryoku K. K., contains three vertical shaft simple Francis spiral turbines, the order for which was passed to Messrs. Escher Wyss & Co. after an international competition had been held. The turbines are designed for the following data:

Digitized by Google

H =	395	413 ft.
Q =	416	425 gals./sec.
N =	27 500	30 000 HP.
n =	300	360 r. p. m., corresponding to 50 and 60 cycles.

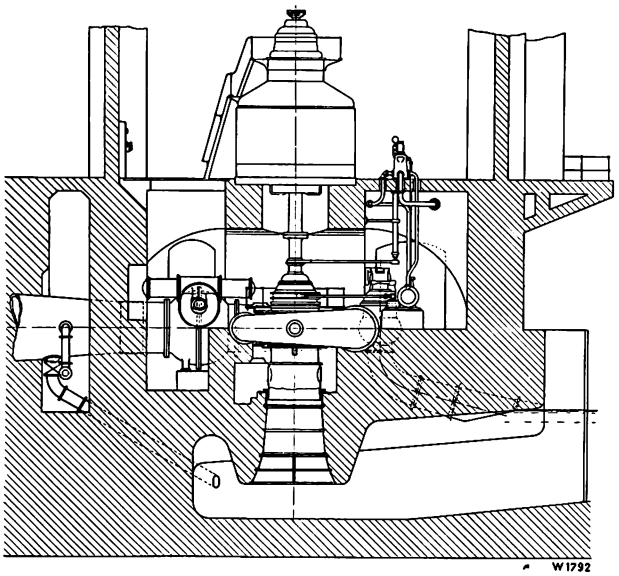

Fig. 14.

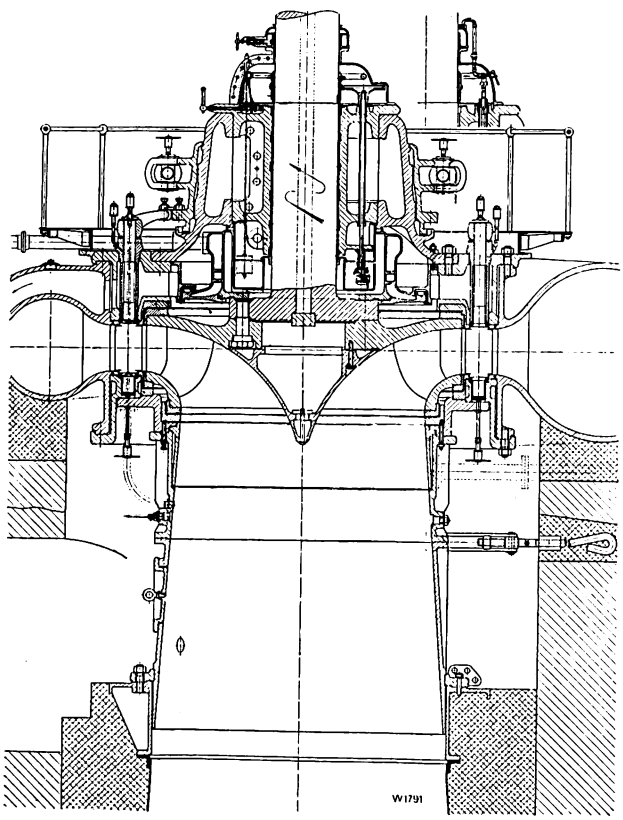

Fig. 15.

The general lay-out of these units differs considerably from that of the Komaki plant. Instead of the central concrete cone supporting the weight of the generator, a beam structure, Fig. 14, is here provided.

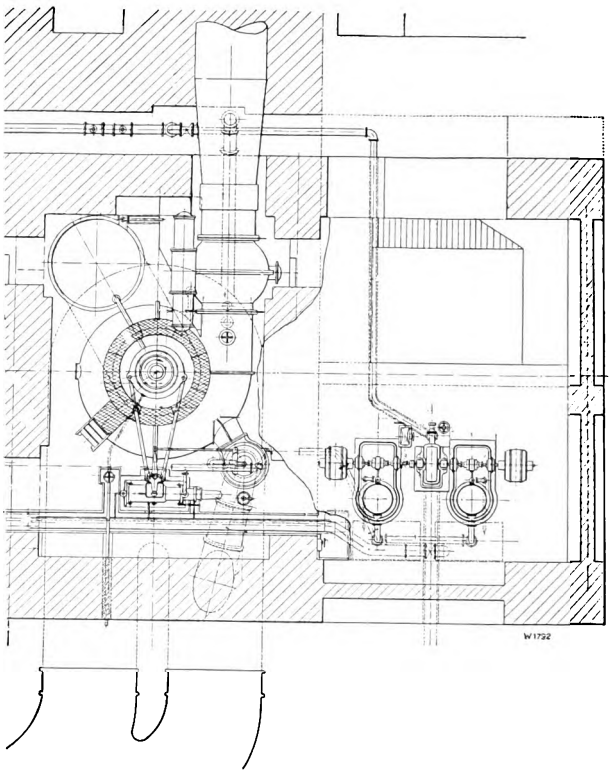

Fig. 16.

The suction bend has been replaced by a Prasil draught tube, whose upper part is of telescopic design permitting of removing the runner wheel downwards.

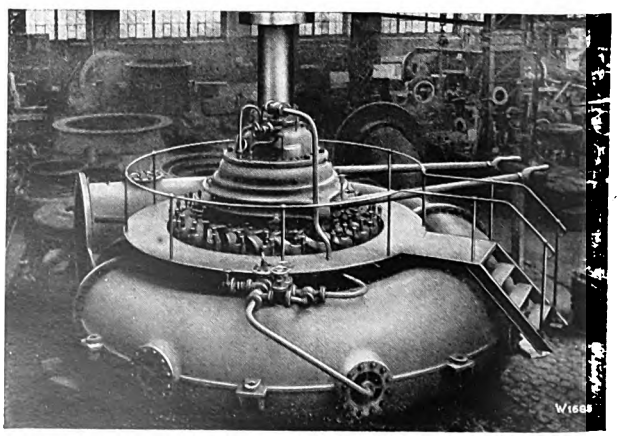

Fig. 17.

Digitized by Google

The turbine as such is of similar design to those described above (see Fig. 15) and is equipped with a rotary valve of 68″ diameter, and a pressure regulator connected with the cast-steel spiral casing.

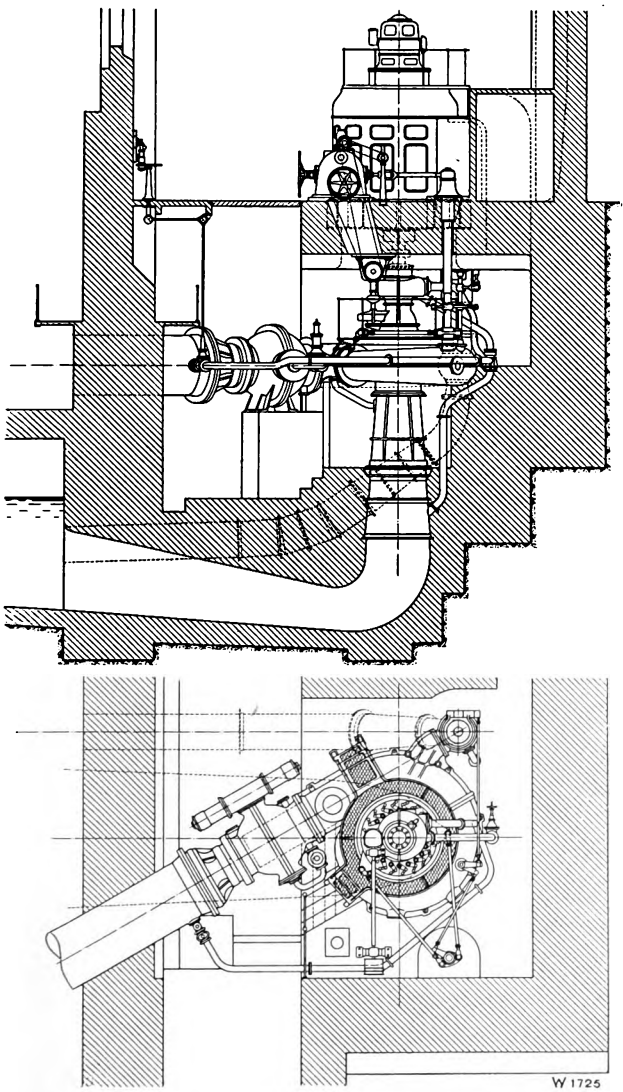

Fig. 18.

The control gear for the rotary valve and the speed governor, likewise the oil pump set supplying the necessary pressure oil for the regulation of the three units and driven by a Pelton turbine are situated on the generator floor, whilst for the sake of simplicity the servomotor is installed in the turbine room, Fig. 16. As compared with the Komaki arrangement, the Yanagawara turbine is more accessible. On the other hand, it must not be overlooked that as soon as the size of the spiral casing exceeds a certain limit the considerably more expensive supporting beam structure has to be adopted with a view to obtaining a better accessibility. Fig. 17 is a photograph of the turbine taken in the workshops. The plant has been in operation since Spring 1928 and has worked without a hitch.

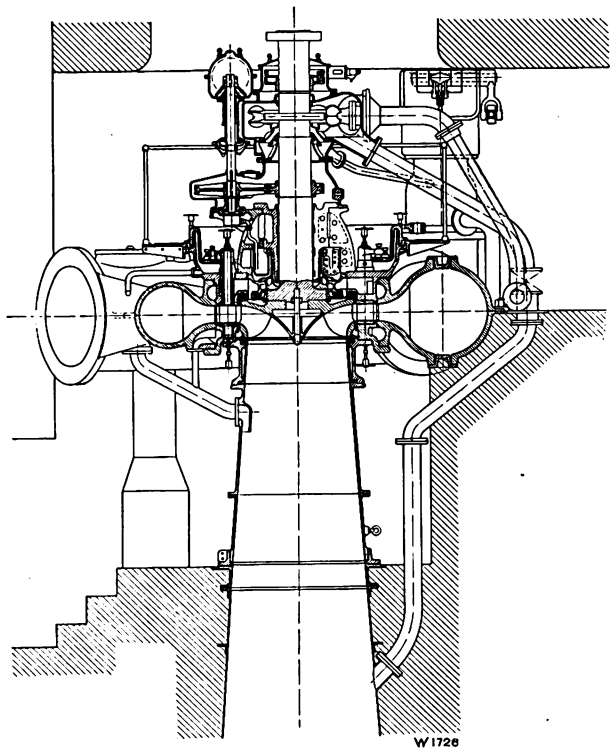

Fig. 19

Cala Plant. The Cia. Sevillana de Electricidad in Sevilla, owning the Cala Power Station, in 1927 gave Messrs. Escher Wyss & Co. the order for two vertical shaft spiral turbines, constructed for the following data:

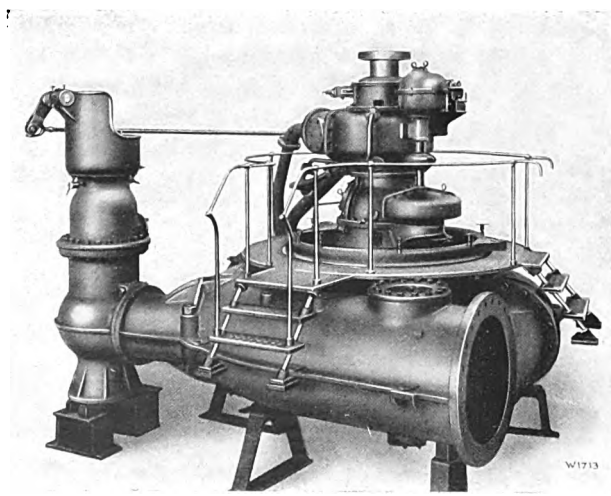

Fig. 20.

Digitized by Google

H =	485	595 ft.
Q =	121	135 gals./sec.
N =	9 000	12 200 HP.
n =	750	r. p. m.

The general design of these units, shown in Fig. 18, is very compact and necessitated, in view of the relatively high speed, a very careful study of the constructional details, utilizing the experience gained with other plants built for similar conditions.

Each of the turbines is provided with its own penstock fitted with a rotary valve and a Venturi tube for measuring purposes. Owing to the local conditions, the discharge canal had to be built on the intake side, resulting in a comparatively long draught tube, whose upper part is detachable allowing of removing the runner wheel downwards.

The runner wheel, guide blades and the two-part spiral casing are made of cast-steel. High-grade steel labyrinth rings protect the parts exposed to erosion, Fig. 19. To reduce the overhang of the runner wheel to a minimum, a hydraulic gland has been provided, fitted with olivite rings to reduce the leakage at times of floods and when the unit is shut down. Over the bearing are located the geared countershaft for driving the speed governor and the oil-circulating pump for the lubrication of the bearings; the braking turbine ensuring a quick stoppage of the unit, and a safety pendulum, which initiates the closing of the rotary valve when the unit races. The governor and the control gear of the rotary valve are placed on the generator floor to simplify the manipulation. A pressure regulator, operated from the regulating shaft, prevents dangerous surges in the intake pipeline, Fig. 20.

At the tests carried out in Spring 1928 a maximum efficiency of 93 per cent was obtained. We may mention that the order for the third turbine, which completes the equipment of the station was also placed with our firm at the end of 1928.

Bevercé Plant. This station is in Belgium and was built by the Société d'Electricité de la Région de Malmédy in Brussels. It contains three turbines constructed by Messrs. Escher Wyss & Co. for the following variable conditions:

H =	393	495 ft.
Q =	655	740 gals./sec.
N =	3870	5700 HP.
n =	750	r. p. m.

In view of the favourable results obtained within the last decade with simple horizontal shaft Francis spiral turbines, there could be no hesitation as to the advisibility of selecting this type under the prevailing conditions. The question, however, whether a two-bearing or three-bearing design should be adopted had yet to be carefully studied.

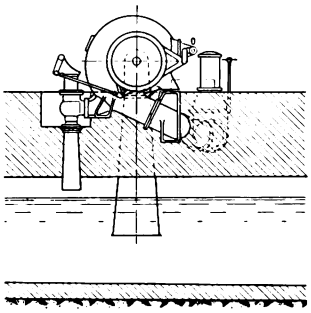

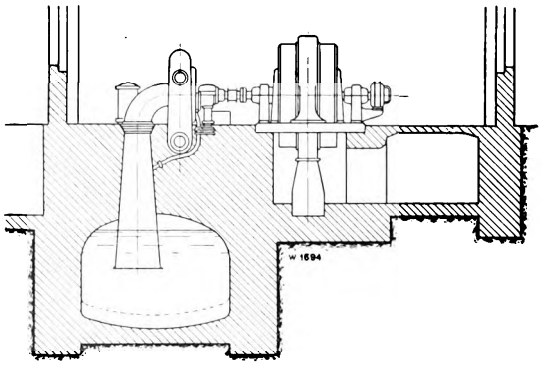

Fig. 21.

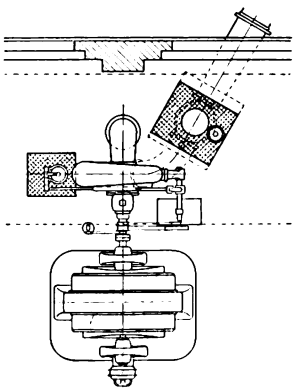

It is generally advisable in order to clearly divide the respective responsibilities of the turbine and generator builders to adopt the three-bearing design, which enables the turbine designer to select a suitable design of bearing to take up the axial thrust, which often cannot be compensated hydraulically. This is impossible when the turbine designer has to so design his bearing that it should at the same time take over a considerable part of the

Digitized by Google

generator load. As will be proved by an example further on, the two-bearing unit, offers no insuperable difficulties even when space is very limited, it leads, however, to specially constructed types.

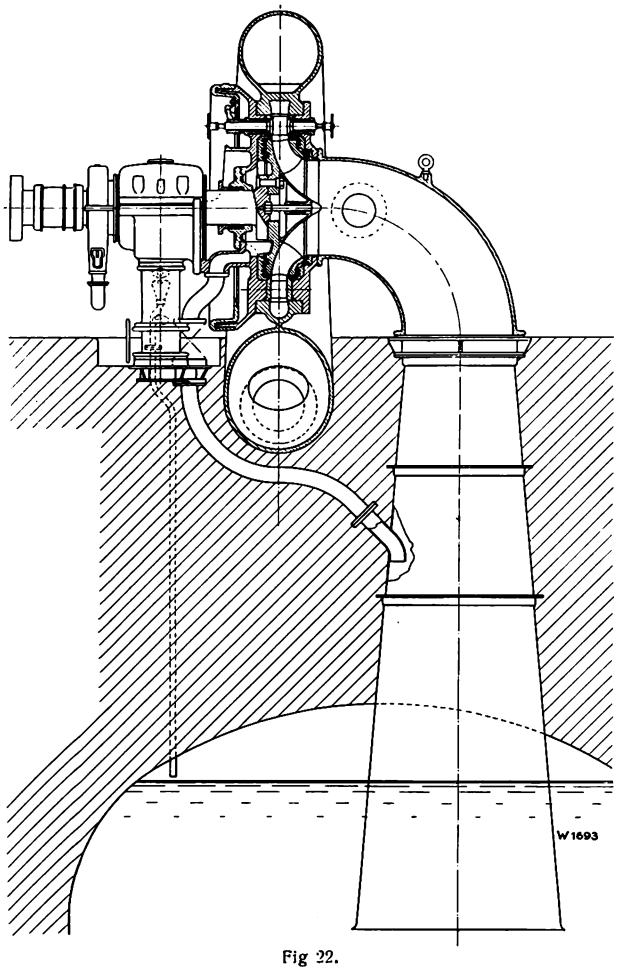

Fig 22.

Fig. 21 represents the general lay-out of one unit and shows its compact design. Each pipeline enters the machine house broadside and is provided with a hydraulically-operated valve, whose control gear is connected with a safety pendulum fixed on the turbine shaft.

As with vertical shaft turbines, so also with horizontal shaft turbines, the exchangeable labyrinth protection rings have proved to be the most efficient means of protection against the erosive effects of sandy water. However, this construction calls for a very careful assembly owing to the inevitable deflections of the shaft. The casing is made of cast-steel throughout and is provided with a connecting branch for the pressure regulator. A heavy pedestal collar bearing, supported by a column containing the cooling device, Fig. 22, follows on the guide wheel cover at the generator end.

The safety apparatus preventing racing of the turbine is bolted on to the bearing casing.

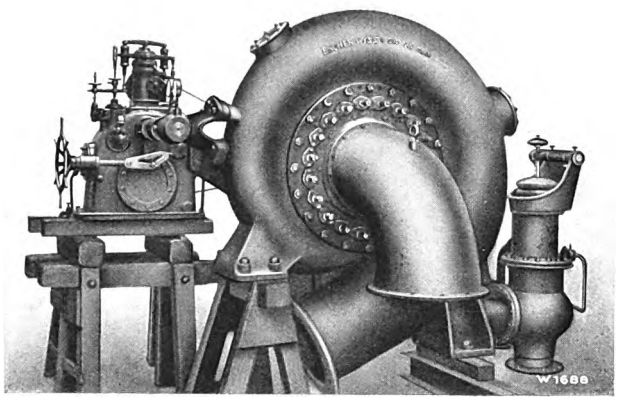

Fig. 23.

Owing to the overhung arrangement of the runner wheel and to the free discharge into a shallow-curved and tapered suction bend most favourable hydraulic conditions and best efficiency are obtained. Fig. 23 and 24 illustrate one of the turbines, erected at the end of 1928, in the workshops of the builders.

Mendalan Plant. This plant is similar to the one just described and is also equipped with three horizontal shaft simple Francis spiral turbines.

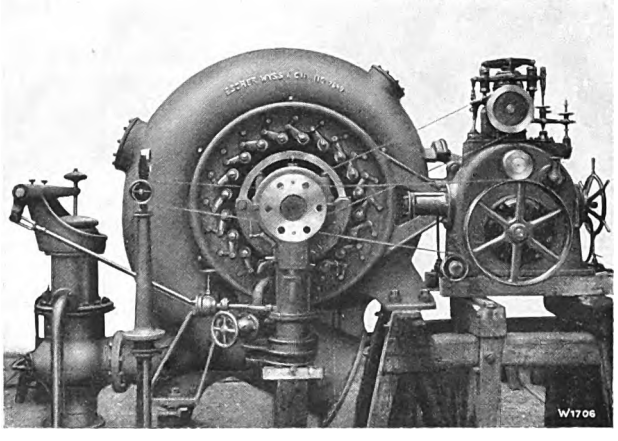

Fig. 24.

The plant was ordered by the Nederlandsch Waterkracht Exploitatie Maatschappy in Amsterdam in 1926 for the power supply on the island of Java. The turbines are designed for the following data:

Digitized by Google

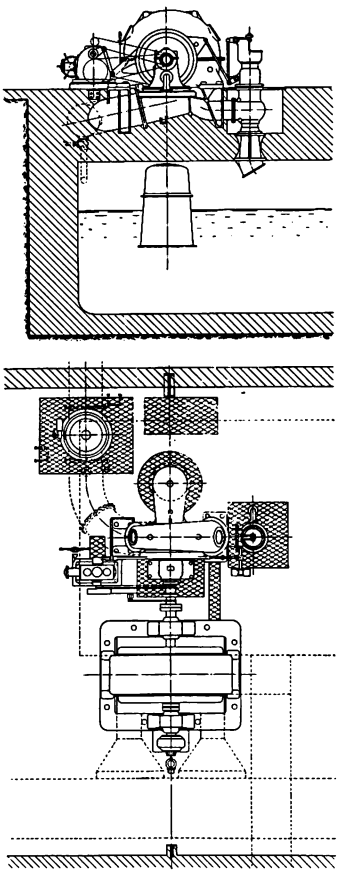

H =	455	505 ft.
Q =	1110	1165 gals./sec.
N =	7800	9000 HP.
n =	750 r. p. m.	

In principle the design is the same as already mentioned, and likewise the constructional details, i. e. the three-bearing arrangement, Fig. 25, the

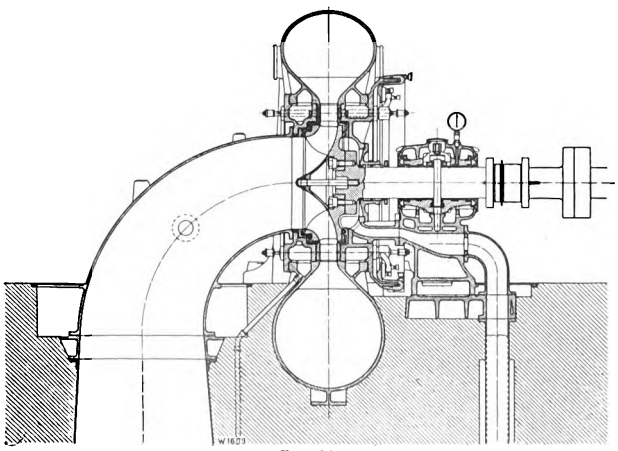

Fig. 26.

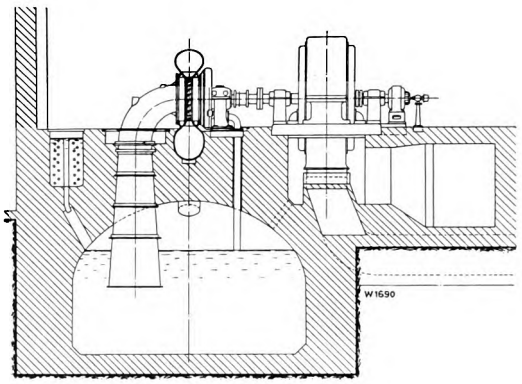

Fig. 25.

overhung runner wheel, the tapered discharge bend, the labyrinth rings and the collar bearing with pedestal, Fig. 26, bolted on to the guide wheel cover. The cooling device of the bearing which is subject to a considerable axial thrust is located on the machine house floor and is combined with a circulating pump contained in the governor. In order to facilitate the transport the cast-steel spiral casing, Fig. 27, had to be made in two halves.

The station has been in continuous operation since Summer 1928 and the tests made by the client proved a maximum efficiency of 90 per cent.

Tuxpango Plant. This plant is a typical example of a horizontal shaft simple spiral Francis turbine of exceedingly compact two-bearing design, Fig. 28.

The turbine is erected in the Tuxpango station in Mexico and was ordered from Messrs. Escher Wyss & Co. by Messrs. Pearson & Son in Mexico and London for the Puebla Tramway, Light and Power Co. as extension of an existing plant for

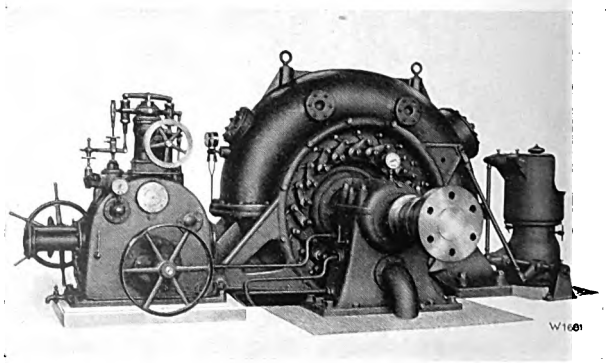

Fig. 27.

which Messrs. Escher Wyss & Co. had already supplied two turbines of the same type, each for an

Digitized by Google

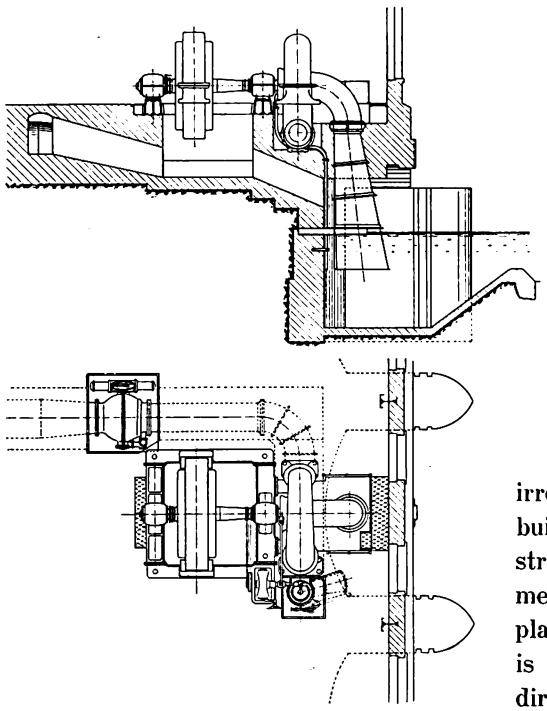

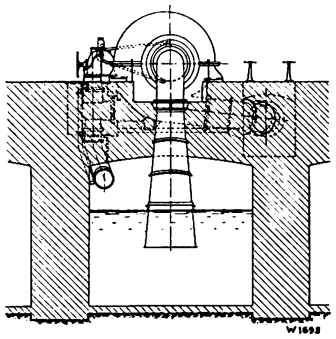

Fig. 28.

output of 8500 HP, in 1913. This new turbine is constructed for the following data:

H = 550 ft.
Q = 1 460 gals./sec.
N = 12 500 HP.
n = 450 r. p. m.

The excellent results obtained with the former turbines induced the client to prescribe exactly the same type for the new turbine, our firm in this case also having to supply the bedplate with the two generator bearings, and the generator shaft, Fig. 29.

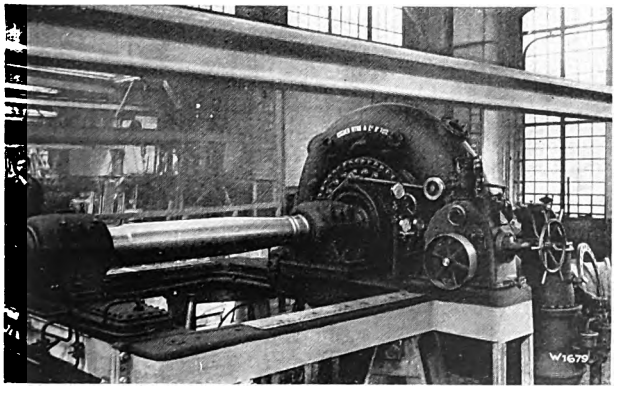

Fig. 29.

This combination offers complete safety for an irreprochable operation, as it enables the turbine builder to design the bearings to withstand the stresses caused by the turbine. The oil-cooling equipment for the two bearings is contained in the bedplate of the outside bearing and the oil circulation is achieved by means of a toothed wheel pump direct coupled with the generator shaft.

To facilitate repairs of the winding and to avoid expensive dismantling work, the stator can be shifted laterally on the bedplate far enough to give access to the rotor.

The turbine as such possesses the same characteristical features as already described, however, the special design of the two-part cast-iron spiral casing, fitted with transverse ribs made of steel plates and cast into the walls of the casing, is worthy of mention, see Fig. 30.

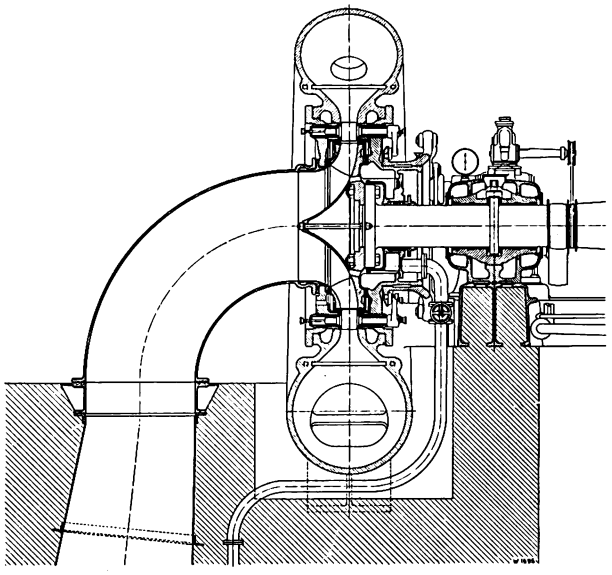

Fig. 30.

Digitized by Google

The arrangement of the governor and pressure regulator is shown in Figs. 29 and 31. This new turbine has been in service since 1925 and has given entire satisfaction.

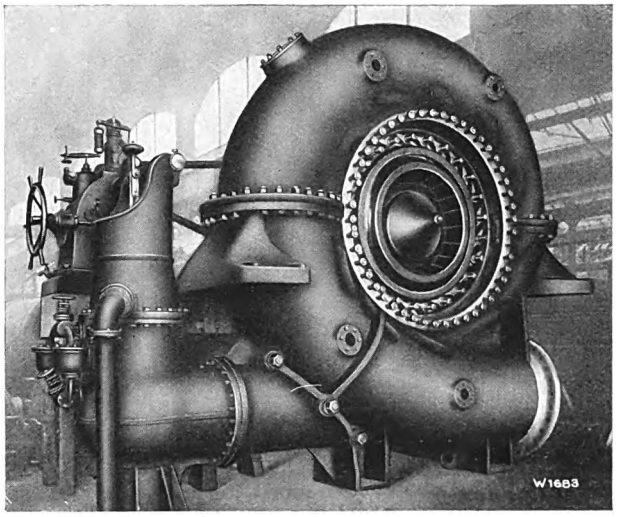

Fig. 31.

Palü Plant. The Power Station Brusio Ltd. in Poschiavo, which Company has for nearly 25 years been utilizing part of the water power of the Poschiavina river and of the lake in Poschiavo in the Campocologno and Robbia stations, three years ago decided to also develop the non-utilized water power of the upper part of the valley and thus to utilize the total head of the Bernina lakes up to the Italian frontier in the Veltlin for the production of electrical energy. The water contained in the two southern lakes lying approximately 7380 ft. above sea level and on the height of the Bernina pass is tapped in the Lake of Scala and conducted through a welded pipeline to the Palü station, lying 6460 ft. above sea level in the gorge below the Palü glacier, where a vertical shaft, four-nozzle Pelton turbine is installed. This turbine is designed for the following data:

H = 865 ft.
Q = 980 gals./sec.
N = 12 700 HP.
n = 500 r. p. m.

With a view to reducing the building costs, which at this height above the sea level are very considerable, by restricting the dimensions of the machine house, and yet to employing a high-speed turbine unit, a four-nozzle, single-wheel turbine type was selected, which type has for more than 25 years been built by Messrs. Escher Wyss & Co. The modern needle nozzle has replaced the flap nozzle.

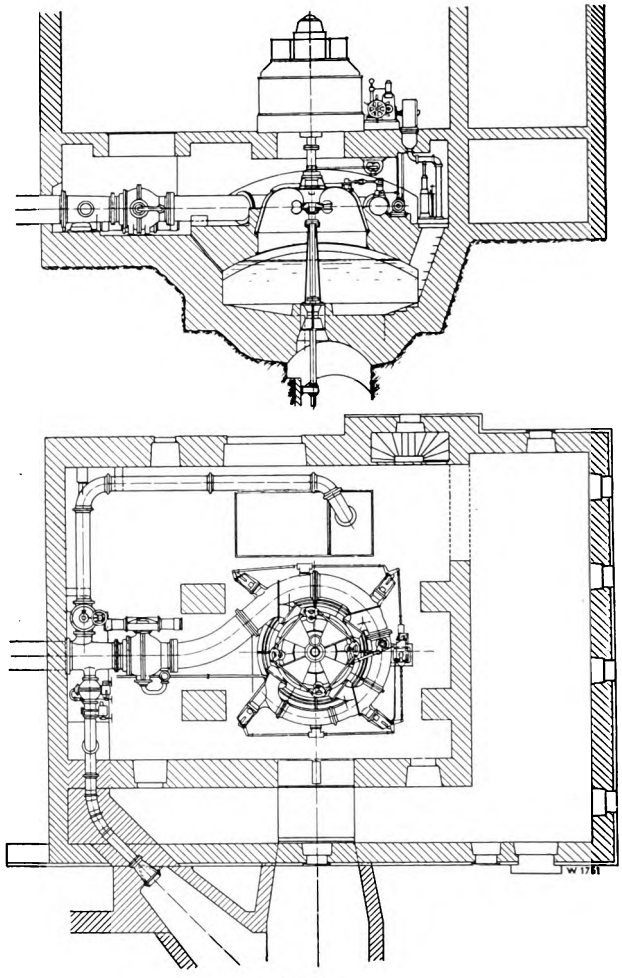

Fig 32.

Fig. 32 illustrates the arrangement of the unit, Figs. 33 and 34 showing vertical and horizontal sections of the turbine. Fig. 35 is a photograph taken in the workshops.

The water is conducted from the pipeline, which is fitted with a rotary valve, through a tapered spiral to the four needle nozzles lying in the horizontal wheel plane. The four needles and the four jet deflectors are positively interconnected. The servomotor for operating the needles is inserted between nozzle 2 and 3, whilst the jet deflectors are controlled from the speed governor situated on the generator floor. The oil pressure is produced by a toothed wheel pump driven by a small Pelton turbine. The runner wheel of the high-speed type is a one-piece steel casting and is mounted on a conical

Digitized by Google

extension of the turbine shaft. The casing cover, especially designed to deflect the water, carries the automatically lubricated guide bearing of the turbine and above this is arranged the horizontal belt drive for the governor pendulum.

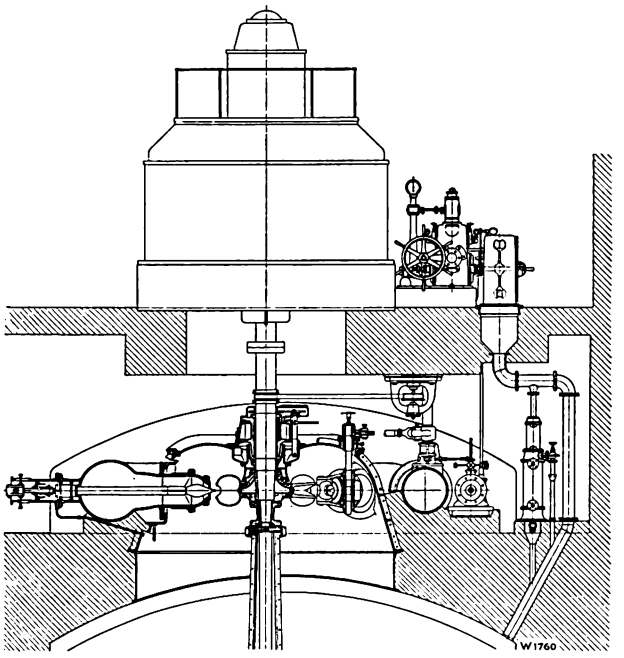

Fig. 33.

The thrust bearing is of modern design and so dimensioned as to take up a load of 35 tons. It is situated on top of the generator and is provided with an oil cooler located in the turbine chamber and a circulating pump coupled with the pump turbine. This separate arrangement of the cooler has proved very satisfactory and results in a uniform transfer of the friction heat, the cold oil being led by means of a diffusor directly into the grooves of the stationary disc.

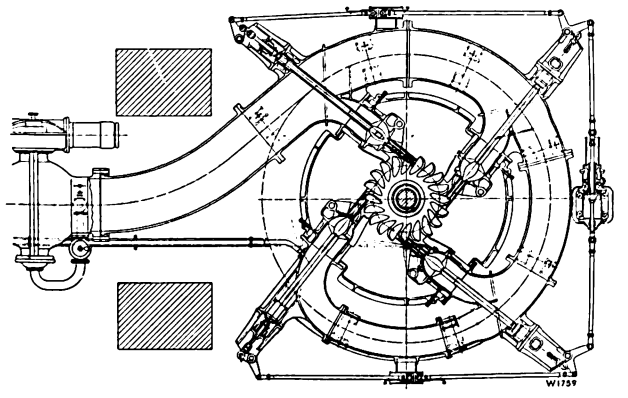

Fig. 34.

A bye pass and energy destroyer, serving the purpose of conducting the water to the lower plant in case of repairs of the uppermost turbine, are connected with the main pipeline immediately in front of the rotary valve.

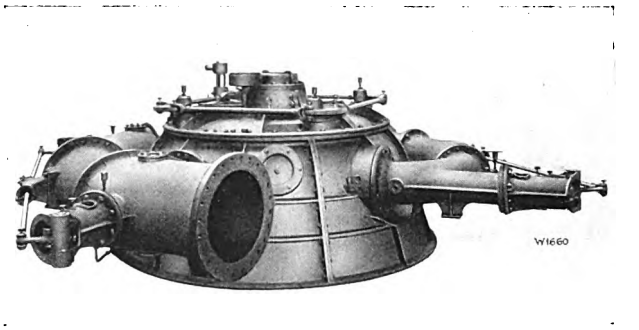

Fig. 35.

The water discharged from the turbine is conducted partly to the small compensating lake situated in the gorge, whose level will later on be raised by a dam, and partly through a pipeline connected with the turbine pit, to a Francis spiral turbine coupled direct with the Pelton turbine, which discharges into the head race of the Cavaglia plant. This Francis turbine serves the purpose for the time being of utilizing the non-utilized head between the water level in the turbine chamber and the water level of the compensating lake to produce electrical energy.

A detailed description of this very interesting combination will appear in one of the later numbers of our «News».

Cavaglia Plant. The machine house of the second head section is situated at the bottom of the valley of the Cavaglia Alp, 5640 ft. above sea level, and contains a turbine of precisely the same type and design as that of the Palü station, but calculated for the following data:

H = 775 ft.
Q = 980 gals./sec.
N = 11 200 HP.
n = 500 r. p. m.

The general design of this unit may be gathered from Figs. 36 to 38; it differs from the Palü turbine in but minor mechanical details. The high-speed capacity of the runner wheel is greater, but tests made in November 1928 showed only a slight difference in the efficiency, which is approximately

Digitized by Google

87 per cent maximum. Both plants were put into service in Dezember 1927 and as definite peak load plants render very valuable services to the owners for their extensive power distribution system.

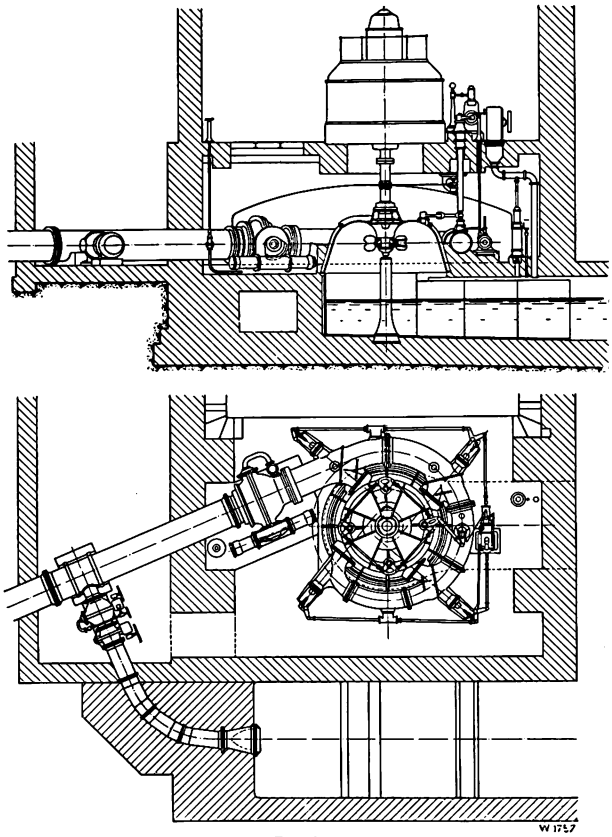

Fig. 36.

A further example of an interesting plant with four-nozzle single-wheel Pelton turbines is the Maipo Plant containing three turbines designed for the following data:

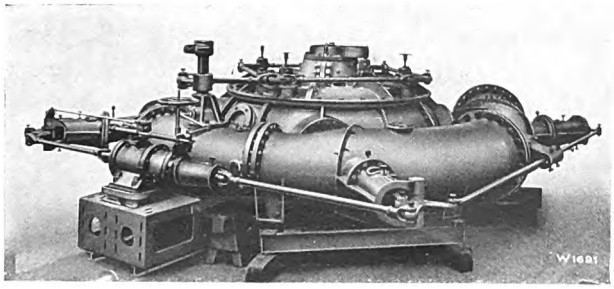

Fig. 37.

H = 675 ft.
Q = 1 825 gals./sec.
N = 18 600 HP.
n = 250 r. p. m.

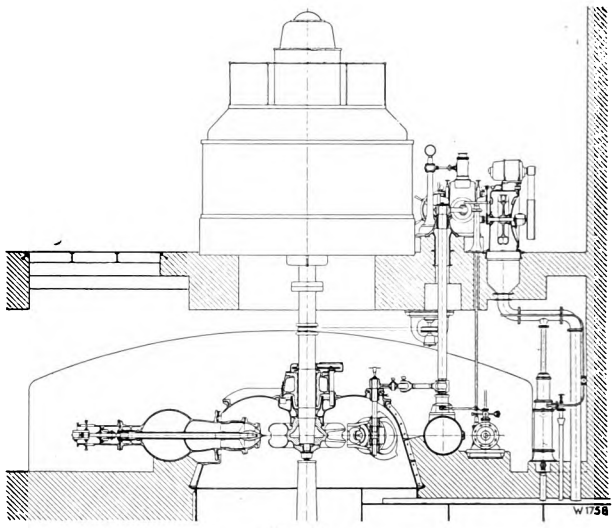

Fig. 38.

This station is in Chile, was built by Messrs. The Whitehall Securities Corporation Ltd. of London and put into service in the Summer of 1928.

Fig. 39 illustrates the complete unit, whilst Figs. 40 and 41 show the constructional details. Fig. 42 is a photograph of one of the turbines taken in the workshops of the builders. The general arrangement

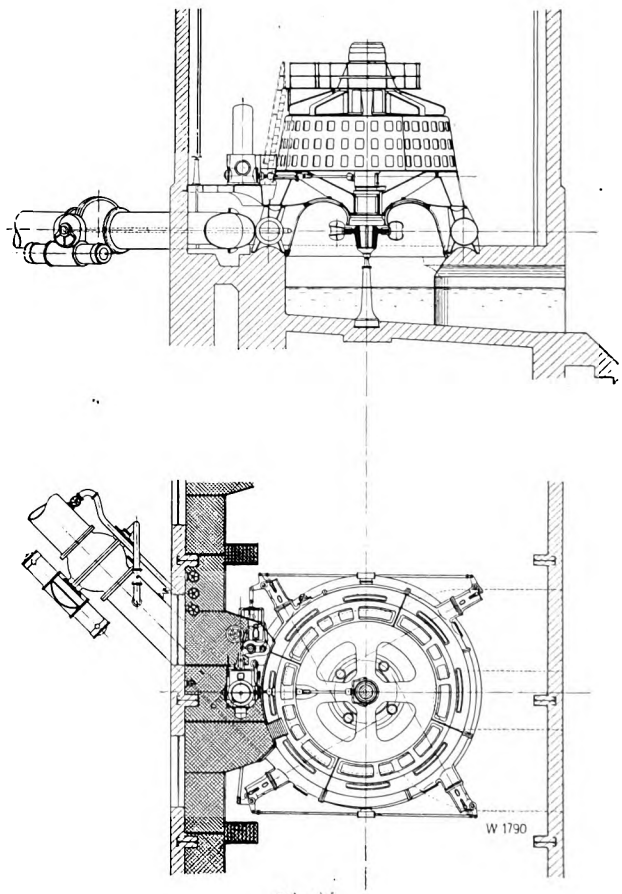

Fig. 39.

Digitized by Google

of the unit differs from that of the turbines thus far described, in so far as the ring-shaped intake pipeline here serves as a base for supporting the

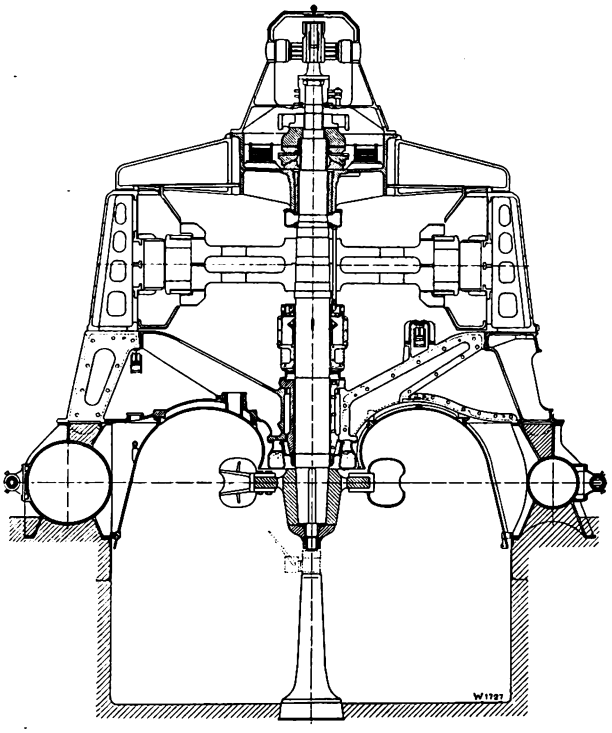

Fig. 40.

generator. The machine house has, therefore, one floor only, which improves the accessibility and facilitates the service control. Besides, the arrangement permits of adopting the two-bearing type of machine owing to the reduced height of the set. The stator is supported by means of a strong cast-iron yoke, whose openings give access to the lower

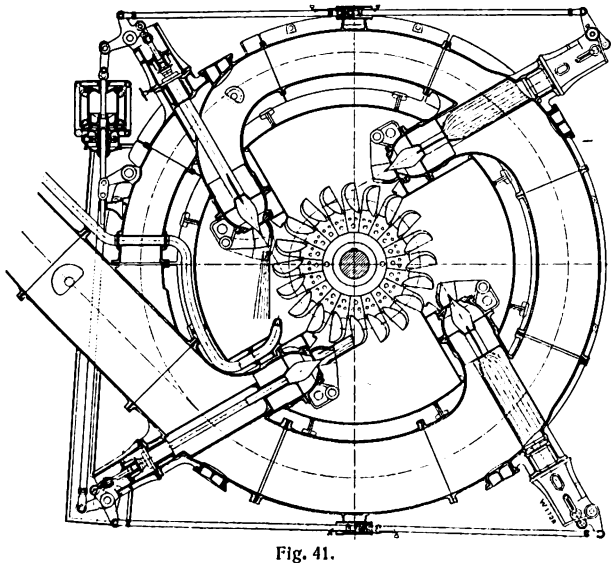

Fig. 41.

guide bearing, the governor drive and the regulating mechanism of the jet deflectors. The bearing is placed as near as possible to the runner wheel and a circulating pump, which can be easily dismantled and is situated in the oil reservoir provides the necessary lubricating oil for the two bearings. Cast-iron deflection plates, so shaped that the water issuing from the upper half of the wheel is deflec-

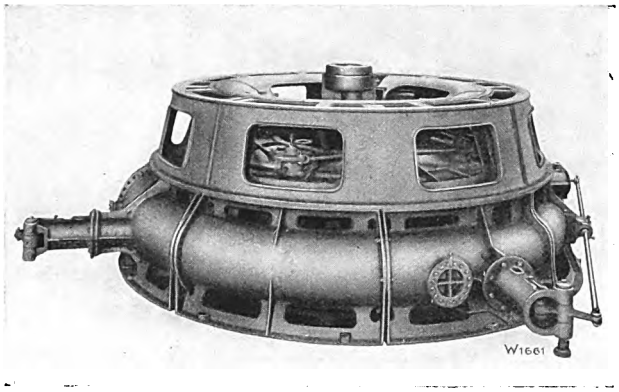

Fig. 42.

ted downwards, are provided inside the spiral. A reliable and undisturbed discharge of the water is conditional for the attainment of a high efficiency, and for the case in point, where the exceedingly sandy water of the South American Andes is used, special provisions had to be made for the rapid exchange of the deflection plates and the exact fit of the butt joints. The four needles are operated by a servomotor arranged on the same level and controlled by oil under pressure, whilst the servomotor operating the jet deflector regulating mechanism is situated on a raised platform, on which are also placed the control apparatus for the governor and rotary valve, the oil pump and the air vessel, Fig. 39. This arrangement is necessitated by the oil pump

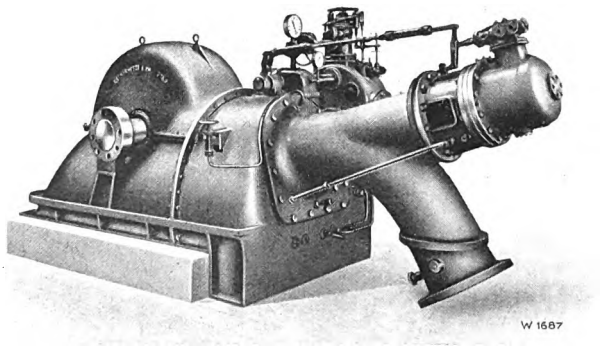

Fig. 44.

Digitized by Google

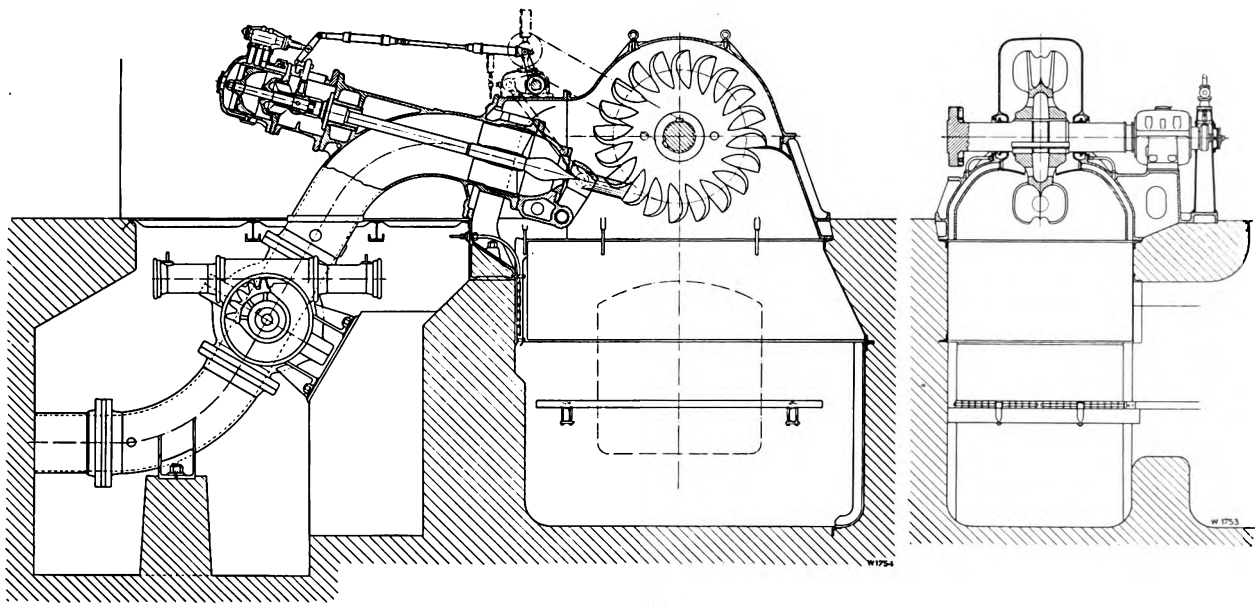

Fig. 43.

and pendulum drive, which had to be fixed above the turbine bearing; it offers, however, the advantage of centralizing the control of the plant, whilst the raised position facilitates the survey of the plant.

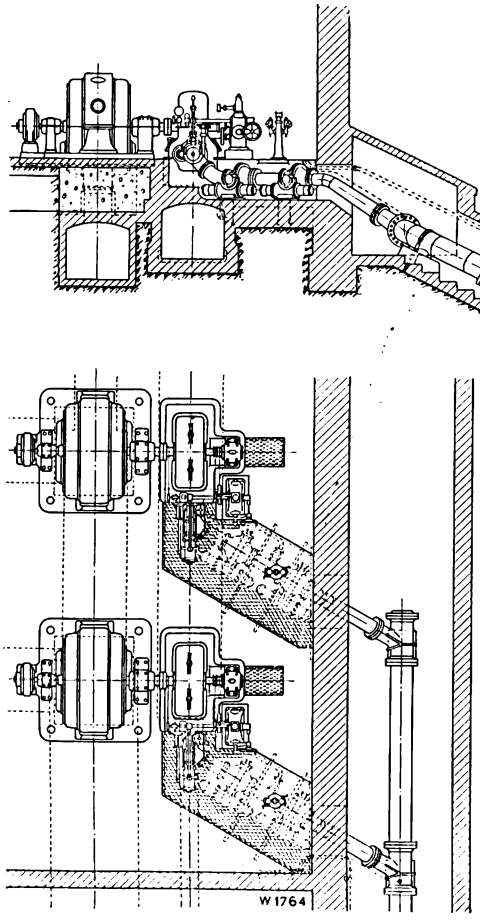

Fig. 45.

The jet deflectors, needles and nozzles are fitted with easily exchangeable parts of high-grade material, so that in view of the presumptive errosive effects of the water only relatively small parts have to be exchanged.

It is beyond question that the compact arrangement of the plant just described promises to be extensively adopted in the future and will successfully compete with the horizontal shaft arrangement hitherto almost exclusively used. It goes

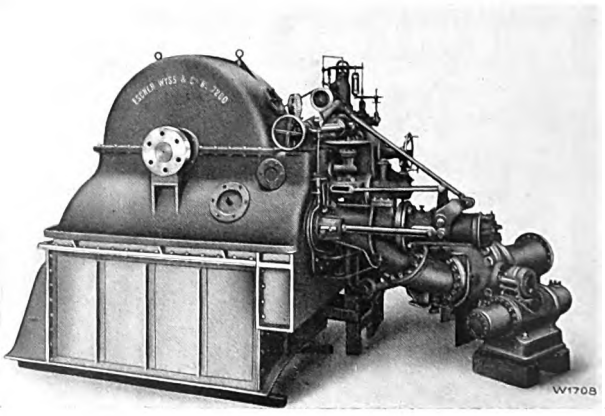

Fig. 47.

without saying that when judging the suitability of the former arrangement all factors having a bearing on the building costs, simplicity and reliability of the service must be duly taken into consideration.

To complete this review of modern water turbine plants, we finally give a short description of two plants equipped with horizontal shaft Pelton turbines.

Digitized by Google

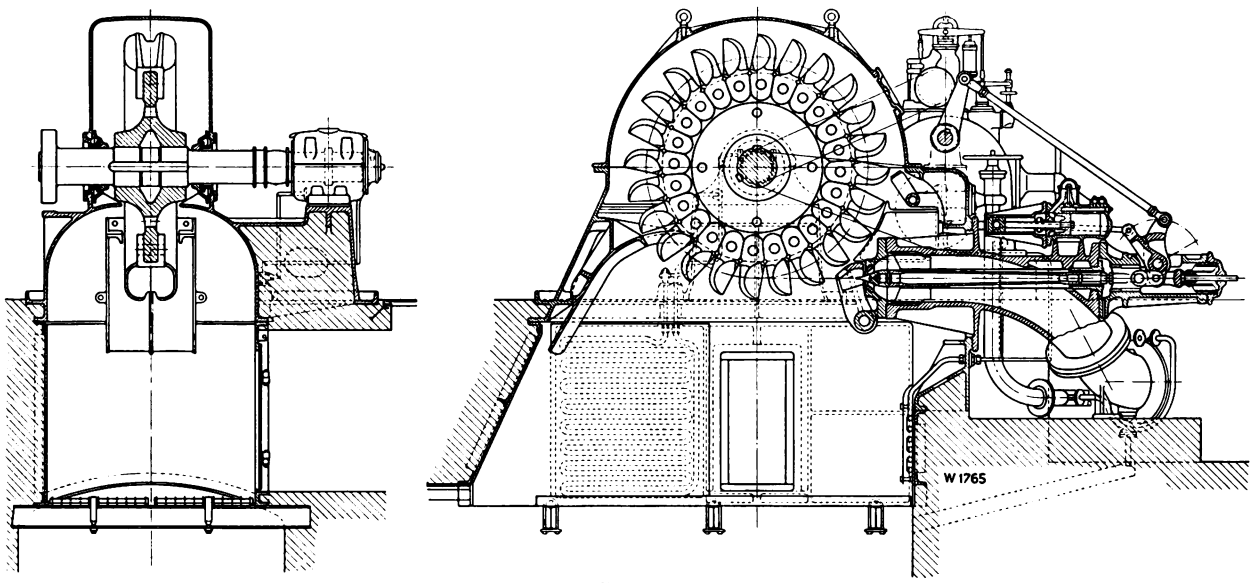

Fig. 46.

Schlappin Plant. This station was built by the Bündner Kraftwerke A. G. in Klosters and contains a turbine constructed for the following data:

H = 1480 ft.
Q = 372 gals./sec.
N = 7500 HP.
n = 600 r. p. m.

Fig. 43 illustrates this one-nozzle single-wheel turbine in section, whilst Fig. 44 is a photograph taken in the workshops.

The runner wheel is cast in steel in one piece and has a diameter of 52″; it is driven by a water jet of 6½″ diameter. The ratio $\frac{D}{d} = 8$ brings this turbine under the category of high-speed machines.

The design is very compact inasmuch as the turbine has only one bearing at its outer end, whilst the generator bearing facing the turbine has to take up part of the tangential force of the jet.

For the rest, the design is the standard one adopted for double regulation; however, in view of the exceedingly unfavourable conditions of the pipeline special precautions had to be taken to avoid pressure surges.

A safety pendulum, attached to the free end of the shaft, initiates the closing movement of the rotary valve shutting off the pipeline when the turbine races.

The plant has been in service since Spring 1928 and the taking over tests made in Autumn 1928 proved a maximum efficiency of more than 87 per cent.

Oberems Plant. This station built by the Illsee Turtmann A. G. in Neuhausen is equipped with two turbines calculated for the following data:

H = 2800 2950 ft.
Q = 122 125 gals./sec.
N = 5300 5600 HP.
n = 750 r. p. m.

As shown in Figs. 45 and 46, the three-bearing design has also been adopted for these units, however, the runner wheel of 60″ diameter differs from the usual practice in so far as the cast-steel buckets are singly screwed on the wheel disc by means of strong bolts and besides fixed with tapered pins. Each turbine is provided with a braking nozzle, which quickly stops the set.

The needle head and nozzle mouthpieces are made of high-grade steel and are easily exchangeable. In view of the high head, the turbine pit is lined with a strong armouring and a door is provided on one side giving easy access to the inner turbine parts for inspection purposes. Fig. 47 is a photograph of one of the turbines taken in the workshops. The plant was put into service in Autumn 1926 and the turbines have given no trouble since; the runner wheels do not show the least sign of corrosion.

In a later number of our «News» we will publish descriptions of some further interesting plants, which are now in course of construction.

Digitized by Google

The development of the water turbine thrust bearing.

By H. Obrist.

The development of the design of water turbines during the last decades has brought about radical changes not only of the turbines as such, but also of various accessories. This remark applies also to the devices serving to take up the weight of the rotor and the axial thrust.

As long as turbines were designed for relatively small outputs only, the load on the step bearing was so small that it could generally be taken up by a journal of about the same diameter as that of the turbine shaft. Such a step bearing was mostly arranged between the turbine and generator and was known under the name of «Fontain journal». Fig. 1 illustrates such a journal bearing. The bearing lenses were supported by a stationary shaft, extended to the lower end of the turbine, and supported by the foundation in the tail race. As may be gathered from Fig. 1, the lenses of such a bearing are arranged to run in an oil bath, the lubrication working on the «semi-liquid friction» principle, by which we understand a friction caused by imperfect lubrication and consisting partly of internal liquid friction and partly of metallic friction. The pressure, which at the beginning, when the journal is new, is only distributed over the surface changes in accordance with the wear caused by the varying gliding velocity in the

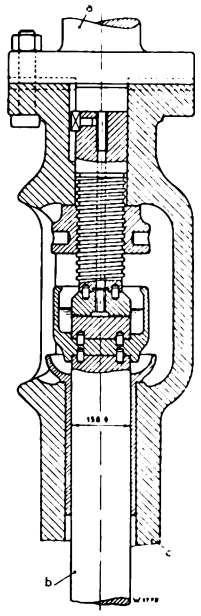

Fig. 1. Fontain's journal bearing.
a) Generator shaft b) Supporting shaft c) Turbine shaft

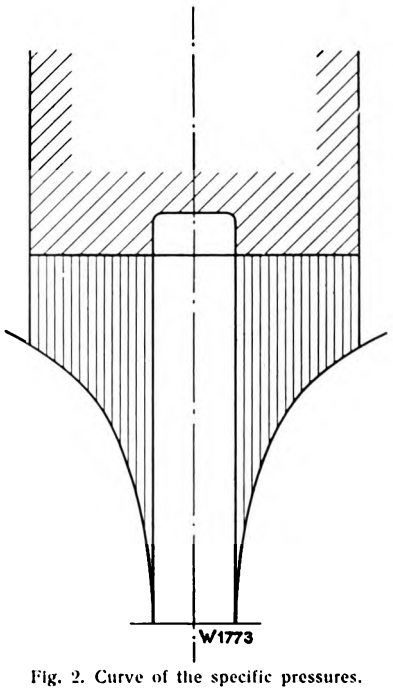

Fig. 2. Curve of the specific pressures.

Digitized by Google

manner shown by the rotation curve, Fig. 2. The specific bearing pressure is a minimum on the periphery and rapidly increases towards the centre. These journals showed but moderate wear and had a friction coefficient of about $\mu = 0.05$, which, when a very good lubricant was used, could be reduced to 0.02.

Vegetable oils were mostly employed as lubricants on account of their high viscosity and the smaller risk of the oil being pressed out of the bearing surface. The thrust lenses were made of fine-grained, sand-free cast-iron, they had a moderate oil circulation and likewise a moderate exchange of heat. As the size of the turbines and the load on the step bearing increased, the oil circulation had to be improved and the thrust bearing relieved by introducing oil under pressure. This rendered it possible, as far back as thirty years ago, to take up weights of the rotating parts, which would have been quite out of the question with an ordinary thrust bearing. The whole development was directed to devising means to enhance the reliability of the bearing and its parts since the working of a turbine provided with such a pressure-oil bearing mainly depended on the reliable operation of the necessary oil pump. Furthermore, attempts were made to substitute the journal thrust bearings by ball bearings. However, the experience gained did not warrant the general introduction of ball bearings and, as a matter of fact, in some cases the ball bearings were replaced by journal bearings of the improved design in order to attain greater reliability in service and longer life of the bearing.

The patented Escher Wyss thrust bearing in its present design is the result of numerous elaborate

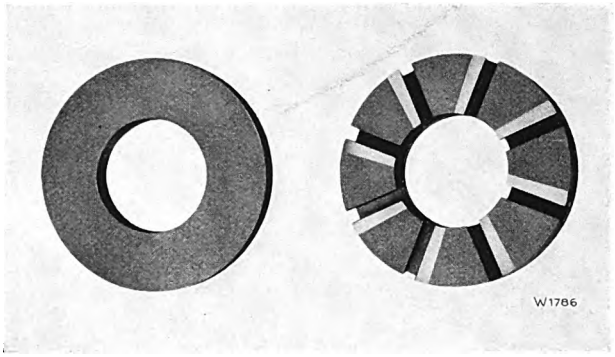

Fig. 3. Thrust ring and segments.

tests and of the experience gained in practical service. Its arrangement differs according to the size and service required. In each case, however, the underlying principle of the lubrication is to produce and permanently maintain an oil film between the stationary and rotating bearing surfaces. This oil film is the characteristic and important feature of a modern thrust bearing, or of any other type of bearing, whose design is in keeping with modern lubricating principles. Contrary to the ordinary step bearing, this bearing operates with perfect liquid friction, which is permanently maintained during the service. Only when the turbine starts and stops

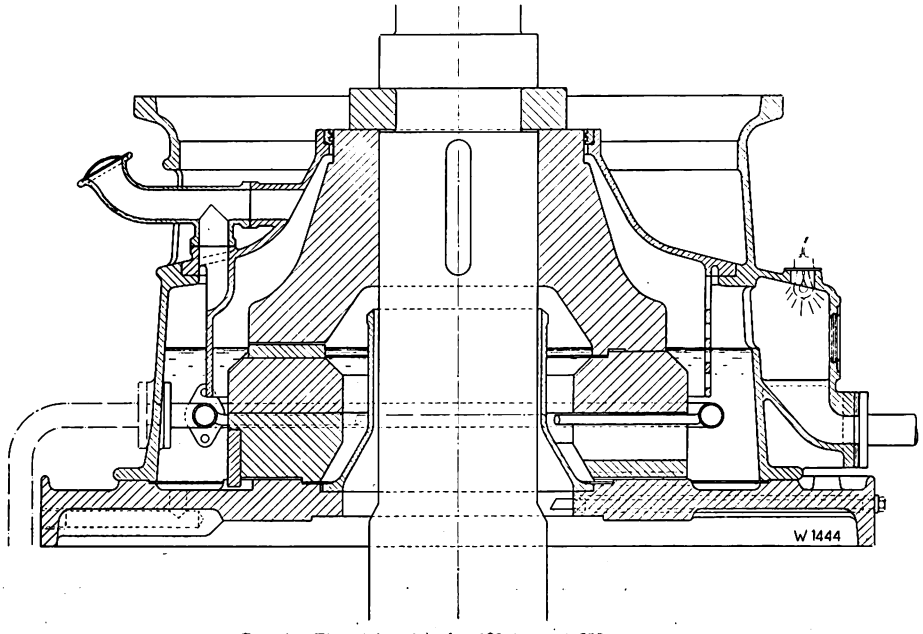

Fig. 4. Thrust bearing for 120 tons at 500 r. p. m.

Digitized by Google

the formation of this oil film becomes questionable owing to the low relative speed between the supporting surfaces, and metallic contact may ensue if not obviated by specially selected lubricants. The actual means employed for producing the oil film will be described below.

firms are known, all of which resemble the designs described above.

The Escher Wyss thrust bearing differs in principle from the designs just mentioned in that the supporting bearing segments are interconnected and form a ring-shaped body, offering decided advan-

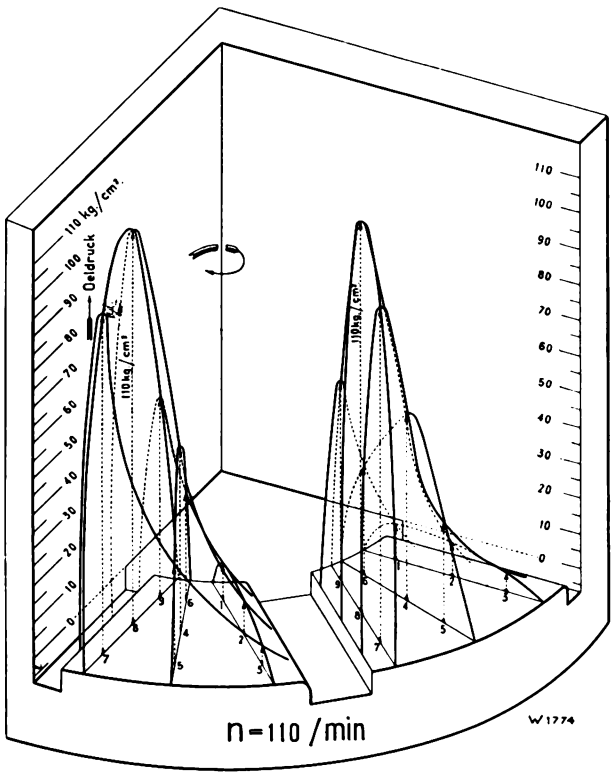

Fig. 5. Diagram of the specific pressures in a thrust ring with 8 segments.

Oeldruck = Oil pressure.

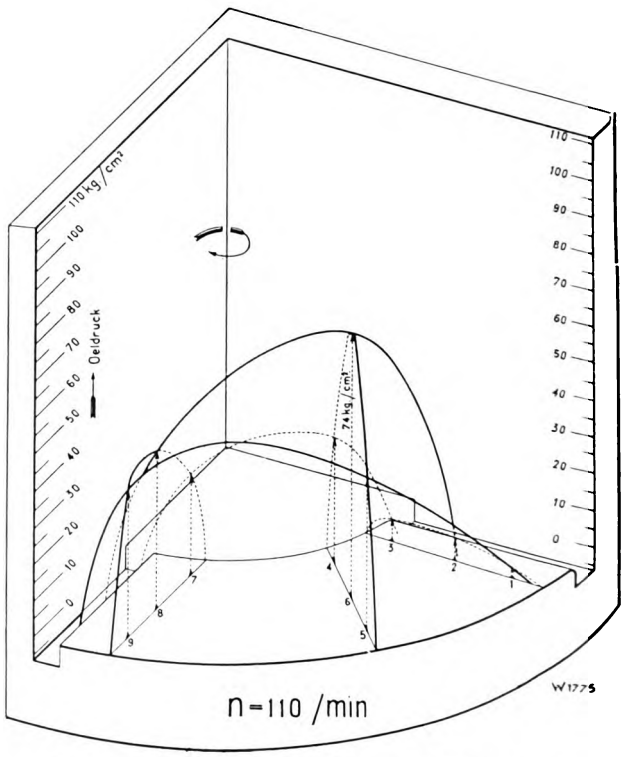

Fig. 6. Diagram of the specific pressures in a thrust ring with 4 segments.

Oeldruck = Oil pressure.

Apart from the Escher Wyss thrust bearing, there are other designs of thrust bearings, all tending to achieve the same purpose by other means, for instance, the well-known Michell bearing and the Kingsbury bearing. The characteristic feature of these bearings is the provision of individual supporting segments, which rest on tilting edges and can move freely and adjust themselves. The supporting surfaces of such bearings mostly consist of white metal, a construction, which in case of a breakdown may have very serious consequences. The melting of the white metal may cause the dropping of the complete rotor by the thickness of this layer of white metal and thus seriously jeopardize the machine if the defect is not noticed in time. A number of other types of bearings of European

tages for the manufacture, erection and service. Fig. 3 illustrates the stationary thrust ring subdivided into segments, and also the rotating upper thrust ring. Fig. 4 shows the typical construction of an Escher Wyss thrust bearing for a load of 120 tons and 500 r. p. m. The thrust rings are contained in a casing, which may either be attached to the generator, or placed between the generator and turbine, or on the turbine direct. The lower stationary thrust ring lies free on the bedplate of the casing and is only secured against rotating, whilst the upper thrust ring is rigidly connected with the shaft by means of a catch. If the bedplate rests on the yoke of the generator, an electrically insulating plate is inserted between the latter and the bedplate in order to prevent eddy currents, which might pass from the

Digitized by Google

shaft and catch to the thrust surfaces and destroy the latter. The thrust rings can be easily withdrawn on removing the catch. The lower thrust rings are provided with radial grooves, which divide the ring-

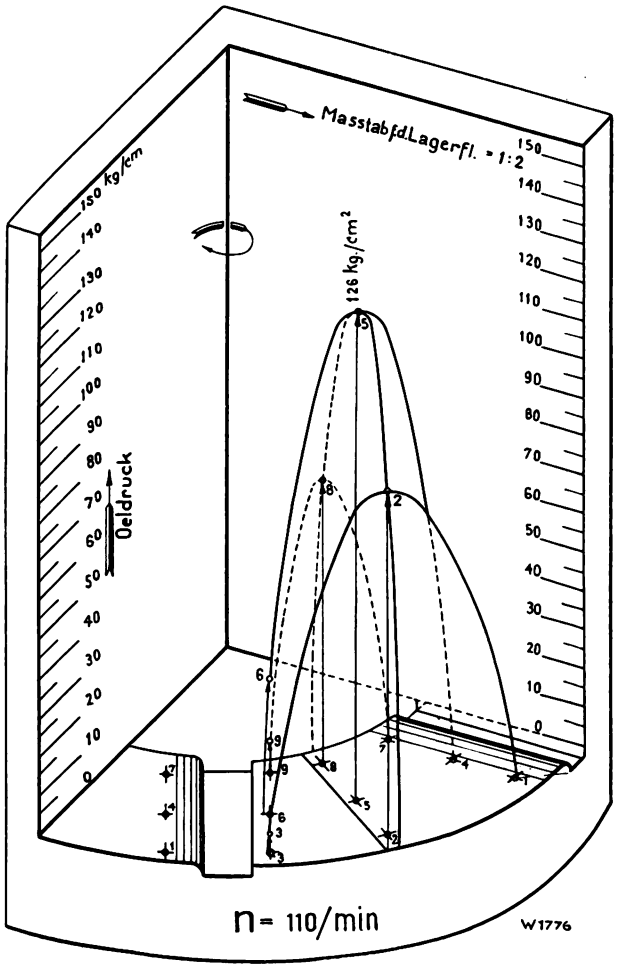

Fig 7. Diagram of the specific pressures in a thrust ring with 6 segments.

Oeldruck = Oil pressure.
Masstab f. d. Lagerfl. = Scale of the bearing surface = 1 : 2.

in. These pressures were measured on a segment and are plotted in the curves shown in Figs. 5 to 8. The segments had practically all the same diameter but differed as regards the subdivision. Tests were

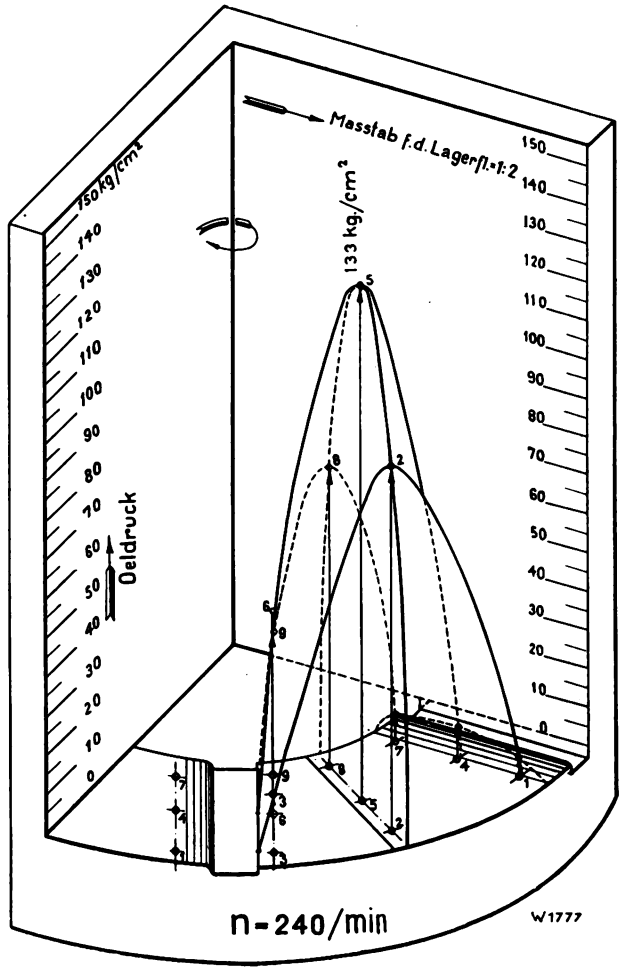

Fig. 8. Diagram of the specific pressures in a thrust ring. with 6 segments.

Oeldruck = Oil pressure.
Masstab f. d. Lagerfl. = Scale of the bearing surface = 1 : 2.

shaped surface into segments, see Fig. 3. These segments are provided with a so-called wedge surface, which starting at the groove slightly rises and gradually passes over into a supporting surface parallel with the rotating surface of the upper thrust ring. This upper thrust ring has a smooth supporting surface and its rotation, aided by the adhesion and viscosity of the oil, causes the latter to be sucked in between the two surfaces where, according to the load and speed, it forms a more or less thick film, which, as proved by the tests already mentioned, may create specific oil pressures of up to 2130 lbs./sq.

also made with segments of equal size with and without supporting surfaces. During these tests the load was kept permanently at 24 tons, and the individual pressures, plotted in a diagram, were measured through holes 1 to 9. The resulting surfaces, which may be styled «pressure mountains», show characteristic differences as compared with the pressure curve of Fig. 2; a glance at the latter and Figs. 5 to 8 confirms this. Fig. 5 illustrates the pressure curves of a segment of a thrust ring having wedge surfaces only, i. e. without the supporting surfaces parallel to the upper thrust ring. Figs. 6

Digitized by Google

and 7 show the differences due to the provision of 4 and 6 segments with wedge and supporting surfaces on one thrust ring. The influence of the speed of

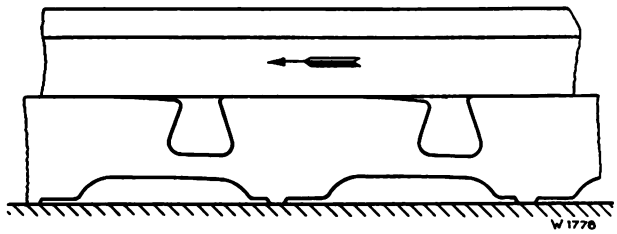

Fig. 9. Development of a section of a lower and upper thrust ring.

110 and 240 r. p. m. with segments of like design may be gathered from Figs. 7 and 8. All illustrations plainly show that the oil pressure drops to the value of zero owing to the flowing of the oil towards the edges of the segments. In the main, the pressure prevailing in the centre of a segment is transformed into speed, causing the above-mentioned flow of the oil towards the edges of the segments. On the other hand, the pressure is permanently and uniformly maintained by the wedge action, enabling the bearing to permanently carry its load. Fig. 9 illustrates a development of part of the lower and upper thrust ring. These explanations prove that a film of oil exists between the stationary and rotating surfaces of the thrust rings, and the thickness of this film of oil, as measured in a thrust bearing, is shown in Fig. 10. The recorded lifts of the rotor, corresponding to the thickness of the layer of oil, are plotted as a function of the speed and temperature. By means of this film of oil, a veritable floating of the whole rotor over the lower thrust ring is achieved, and in normal service any metallic contact and, therefore, also any wear of the surfaces

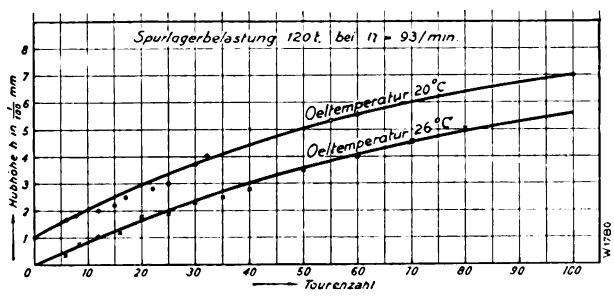

Fig. 10 Thickness of oil film = height of lift.

Hubhöhe = Height of lift
Spurlagerbelastung = Load on thrust bearing.
bei = at; Oeltemperatur = Oil temperature.
Tourenzahl = Speed in r. p. m.

is prevented. Compared with the former designs of thrust bearings, the friction conditions are decidedly more favourable. As the lubrication is perfect, the friction here follows the laws of liquid friction and is dependent on the properties and the temperature of the lubricant employed, the gliding velocity and the specific load. Fig. 11 illustrates the conditions in a very instructive manner; it shows the friction indices for different loads and speeds. The smallest friction coefficient found during these tests was 0.0014.

An important item for reliable service is the permanent abduction by suitable means of the heat created by the above friction coefficients, should the heat exchange by radiation alone not suffice. The appliance mostly employed to serve this purpose is a cooling coil surrounding the thrust rings through

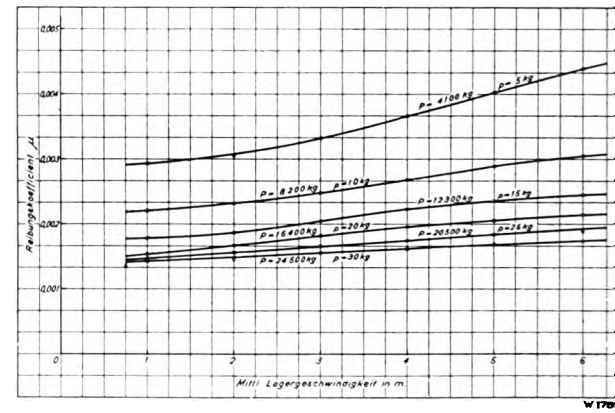

Fig. 11. Friction coefficients at different loads and speeds.

Reibungskoefficient = Friction coefficient.
Mittl. Lagergeschwindigkeit in m = Mean bearing velocity in metres

which water flows, as shown in Fig. 12 for a thrust bearing for a load of 70 tons and 600 r. p. m. The direction of the flow of the water in the cooling coil is preferably such that the tangential movement of the oil produced by the rotating thrust ring is in opposite direction to that of the water whereby the most perfect heat exchange is obtained. In many cases this method of cooling is enhanced by the provision of further cooling tubes in the oil channels of the lower thrust ring, see Fig. 13. For very large bearings, an intensive cooling effect may be produced by an artificial circulation of the oil, for which purpose a special pump is used, which presses the oil into the oil channels of the lower thrust ring by way of a cooler, and sucks it back again through an overflow situated on the outer periphery of the bearing. The thrust bearing illustrated in Fig. 4 is

Digitized by Google

equipped with this cooling device. When rigorous regulations concerning the service have to be observed, both cooling devices are provided.

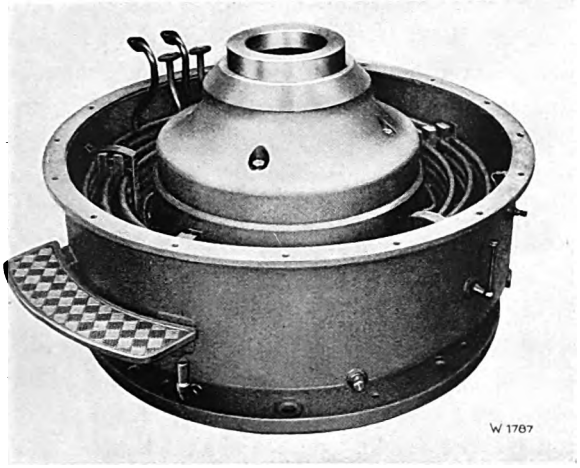

Fig. 12. Thrust ring with two cooling coils.

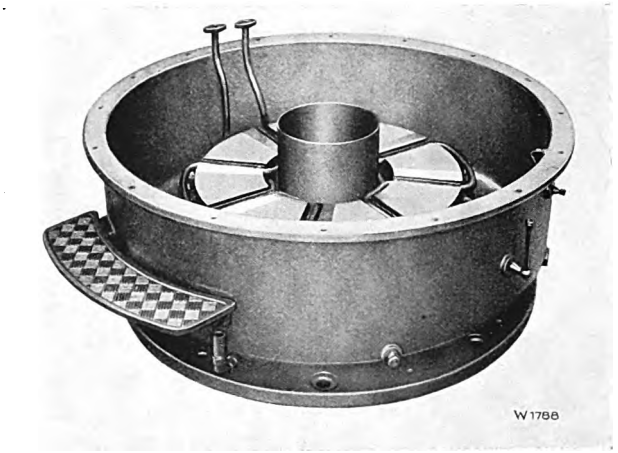

Fig. 13. Thrust ring with one cooling coil.

The heaviest loads dealt with heretofore led to the construction shown in Fig. 14, which differs from the designs thus far discussed in that the upper rotating thrust ring is divided into an inner and an outer ring. This subdivision results in rings of half the width with a correspondingly smaller deformation. The transmission to the two thrust rings from the catch is effected by means of a special ring, provided between the two elements mentioned above, so that each of them has the same specific load. This subdivision just described may also be performed with the lower stationary thrust disc. Messrs. Escher Wyss & Co. hold patents also for this design. Apart from that, the equipment of this bearing is similar to that of the bearings already described. It should be mentioned that the thrust bearings are provided with gauges fixed to the casing, which indicate the oil pressure of the supporting surface and wedge surface, and a thermometer with capillary tube. These instruments allow the attendants to exercise a reliable and permanent control of the condition of the bearing.

The above remarks dealt with bearing designs for vertical turbine shafts, but these designs may be equally as well applied to turbines with horizontal shafts. Generally, the thrust bearing is combined in one casing with a radial supporting bearing. Fig. 15 illustrates such a bearing, with which all horizontal water turbines of Messrs. Escher Wyss & Co., where the unbalanced axial pressures become so large that they can no longer be taken up by an ordinary collar bearing, are equipped. As shown in Fig. 15, the shaft is provided with a forged-on catch ring on which two rotating thrust rings with smooth running surfaces are seated. This arrangement allows of the hydraulic thrust being transmitted either to the left or to the right to the duplex stationary

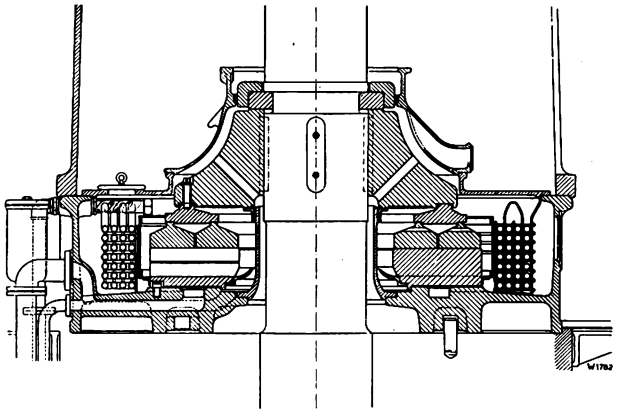

Fig. 14. Thrust bearing for 500 tons load and 150 r. p. m.

thrust rings, which are also provided with radial grooves and wedge surfaces like those already described, and work on the same principle. These stationary thrust rings and the two supporting bearing bushes are contained in a cylindrical casing, which is so designed that it can freely move symmetrically to the centre of the bearing body common to both;

Digitized by Google

thus the combined bearing system is able to follow the unavoidable deflections of the shaft. The comparatively high peripheral speeds of the rotating thrust rings with their large oil-lubricated surfaces

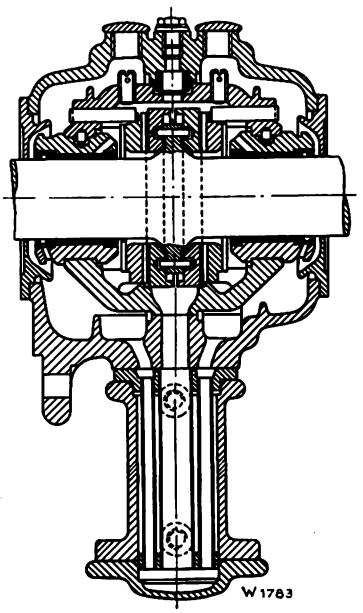

Fig. 15 Combined bearing system.

are utilized to convey the oil and to maintain an automatic circulation of the oil in the bearing. Bearings subject to heavy loads are equipped with an oil cooler, situated below the body of the bearing, through which water flows, whilst the circulation of the oil is effected by means of the automatic pumping action of the thrust rings described above. If, in extreme cases, this pumping action does not suffice, a separate oil pump is provided in the oil-circulating system, with which a very intensive heat transfer is obtained.

To ensure permanently reliable functioning of the thrust bearings, it is not only necessary to have the bearings accurately executed, but these must also be provided with an excellent lubricant. Regarding the properties of the oil brands to be used for thrust bearings, only few general rules can be given. Tests and experience, however, prove that preferably pure mineral oils should be employed. It should be further remarked that when oil of less viscosity is used, a thinner film of oil is produced with a correspondingly smaller friction coefficient, whilst with oil of greater viscosity the friction coefficient and the thickness of the oil film increases. For practical reasons more viscous oil is preferred in order to ensure a reliable operation of the machine when starting and stopping. The viscosity of the oil is, however, not the only deciding factor for the choice of the oil, and the lubricating capacity of the oil has also to be considered. The greater the latter, the better the oil film adheres and a lesser viscosity may be accepted. On the other hand it must not be overlooked that there is a limit to the thickness of the oil film on account of thermal influences. Furthermore, the oil used should not have a tendency to oxydize, i. e. it should be proof against the influences of the oxygen of the air. If the oil does not posses this quality, tar sediments will settle on the cooling coils, which can seriously affect the transfer of heat and thus represent a certain moment of danger.

Summary.

The development of the thrust bearing from the old step bearing to the modern Escher Wyss thrust bearing is discussed under due consideration of the friction conditions and the specific oil pressures. Furthermore, a description of the formation and the purpose of the oil film, and likewise of the different heat transfer appliances is given. Finally, attention is drawn to the correct choice and to some important properties of the oil.

Digitized by Google

Automatic Water Power Plants.

By H. Hüllmann.

The economy of small and medium-sized water power plants is frequently seriously jeopardized by the comparatively high costs of attendance, especially when the attendants have no opportunity of devoting their spare time to other work. The attendance costs of a simple water power plant operating with shifts amount to approximately £ 400 per annum including the expenses for lodgings.

On diagram, Fig. 1, is shown the cost of attendance per kW-hr for power stations of from 200 to 1000 kW and 10 000 kW output assuming a service of 4000 hours per year. For higher outputs up to say 10 000 kW, a single shift will in most cases not suffice for normal plants and the annual attendance costs will, therefore, rise to about double the figure given above.

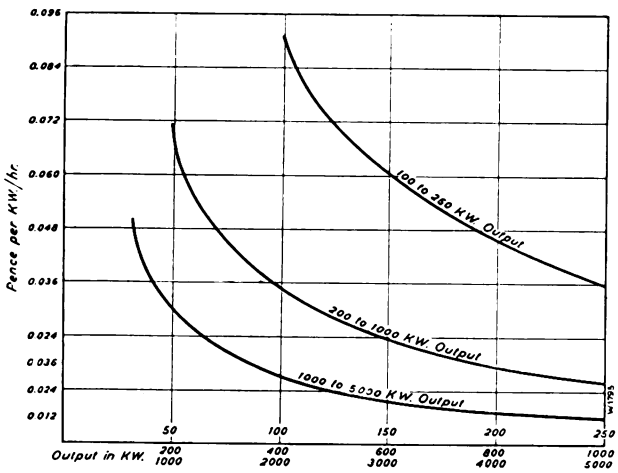

Fig. 1. Attendance costs for water power plants at different outputs.

Small water power plants very often have to supply with electric energy single farms, etc., situated in isolated areas, the connection of which with the mains of a long-distance transmission line would be a very expensive item. Such power plants mostly operate economically only when no special attendance is required and when the capital expenditure is reduced to a minimum. In order to obviate the employment of the relatively expensive automatic oil-pressure governor for the small outputs involved, an accumulator battery is frequently used, which automatically compensates the load fluctuations and must be switched off when it is fully charged. Very often, however, the available flow of water is so large that a storage of energy by means of a comparatively expensive battery is not necessary. For such cases direct current generators were designed, which are capable of producing a constant voltage within very wide limits at variable speeds. In the diagram, Fig. 2, the speed characteristics of different kinds of turbines have been plotted as a function of the load and for constant head. With high-pressure and medium-pressure turbines the fluctations of the head have generally little bearing on the speed fluctuations. The behaviour of low-pressure turbines at variable heads depends on the type of turbine chosen and the speed. [1]) The diagrams prove that the direct current generator for constant voltage must be designed for a speed range of from 80 to 100 per cent above normal speed if it shall be capable of satisfying at normal head conditions the requirements without requiring a governor.

If the minimum quantity of water available is always in excess of the «absorbing capacity» of the turbines, then machines with stationary guide apparatus without regulation can be employed; otherwise an adjustable guide apparatus or an adjustable nozzle must be provided. In this case it becomes necessary at certain intervals to adjust the guide vanes in order to adapt the opening of the turbine as near as possible to the flow. This adjustment may be performed by hand, though it is very simple to provide an automatic adjustment of the guide apparatus, operated electrically or hydraulically, and controlled by means of a float.

In order to attain as high a speed as possible at small heads, high-speed propeller turbines are preferably used. When the flow fluctuates very considerably, low-speed Francis turbines with hand regulation and with a flat efficiency curve are preferred.

[1]) Dipl.-Ing. Dubs: Die Eigenschaften der Wasserturbinen bei gleichbleibender Drehzahl und stark veränderlichem Gefälle.

Digitized by Google

The voltage of the direct current generators remains practically constant in spite of the very pronounced speed fluctuations, as shown in diagram, Fig. 3. The excitation can be adjusted in such a manner that the drop in voltage in the outgoing line owing to heavy loads is automatically compensated by a corresponding rise of the voltage of the generator. If the speed of the machine drops below normal, then the voltage also drops to a value, which

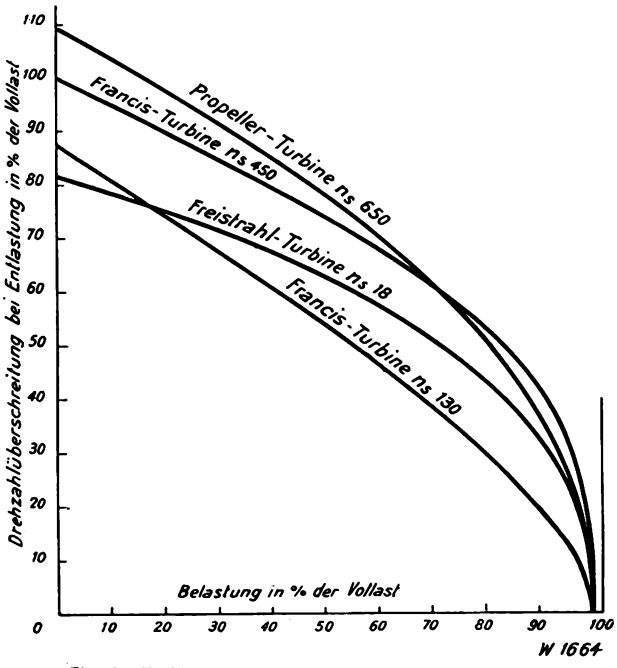

Fig. 2. Turbine speeds at full admission as a function of the load.

Drehzahlüberschreitung bei Entlastung in % der Vollast = Excess speed at diminished load in per cent of full load
Belastung in % der Vollast = Load in per cent of full load.
Freistrahlturbine = Pelton turbine.

approximately corresponds to the speed of the turbine. Therefore, the turbine when overloaded does not suddenly stop, but simply runs at a slightly lower speed, whereby the overload is evidenced by a dimming of the lamps. The automatic regulation of the voltage is due to a special arrangement of the field and armature ampere-turns which mutually influence each other, so that tension surges arising from sudden load fluctuations disappear in the fraction of a second. Since the machine in regard to sparkless commutation behaves like a normal interpole machine, it may be employed not only for small outputs but also for medium sizes.

Fig. 4 illustrates a set with the turbine direct coupled to a constant-voltage dynamo. The latter is manufactured in series for outputs of up to 10 kW.

Economically more important are automatic water power plants for the generation of three-phase current. These plants are very frequently rendered uneconomic on account of the high costs of attendance, especially where small and medium-sized plants are concerned.

For three-phase plants both asynchronous and synchronous generators may be employed.[2]) The simplest and cheapest solution consists in the provision of an asynchronous generator. The turbine plant is generally started from the generator end by speeding up the generator as an asynchronous motor with a starting resistance by means of current taken from the network. In this case, a parelleling gear, as required for synchronous machines, is not required. As soon as the water is admitted to the driving turbine, the speed of the asynchronous machine increases and when the synchronous speed is passed electrical energy is supplied to the network, see Fig. 5. When the load fluctuates, the new load conditions automatically adjust themselves without the aid of any special device. Such plants without auxiliary excitation, however, can only be employed as secondary power stations, the excitation current being supplied from the main power station. The above-mentioned advantages are, however, counter-balanced by disadvantages, which have been the cause of asynchronous generators of normal design not having been adopted to a larger extent for automatic plants of higher outputs. Above all, it must be pointed out that the excitation current for the asynchronous generator must be taken from the network without an auxiliary machine and that the main machines of the supply area, therefore, operate at a low power factor. In practical service care must be taken that the energy supplied by the asynchronous generator never exceeds the minimum load of the network, as otherwise a stable service can no longer be upheld.[3])

These disadvantages have in the course of the last few years led to the development of a number of designs of asynchronous generators with compensating devices.[4])

By employing compensating devices or auxiliary machines the asynchronous generators are made independent of the excitation from the network and it is possible to adjust the power factor to the momentary service conditions. They may be em-

[2]) Bedienungslose Nebenelektrizitätswerke mit Antrieb durch Wasserturbinen von Ing. Gormann, ETZ, 1926.

[3]) Siemens-Zeitschrift 1921, Numbers 4 and 5

[4]) ETZ 1927, Number 16, pages 541/42, L. Dreylos: Drehstromasynchronmotor mit eingebauter Kompensierung.

Brüderlein und Stump, Karlsruhe (T. H.): Selbständige asynchrone Generatoren, ETZ 1925, 5th November 1925, Number 45, pages 1688/89.

Digitized by Google

ployed for starting from the generator or turbine end or for simultaneous starting from the generator and turbine end. When starting from the turbine end, oil circuit-breakers for compensated asynchronous generators can be dispensed with if special

fore, advantageous to increase the wattless current by means of a suitable automatic adjustment of the power factor to such an extent that the generator is always fully loaded with the additional wattless current, as this relieves the other machines working

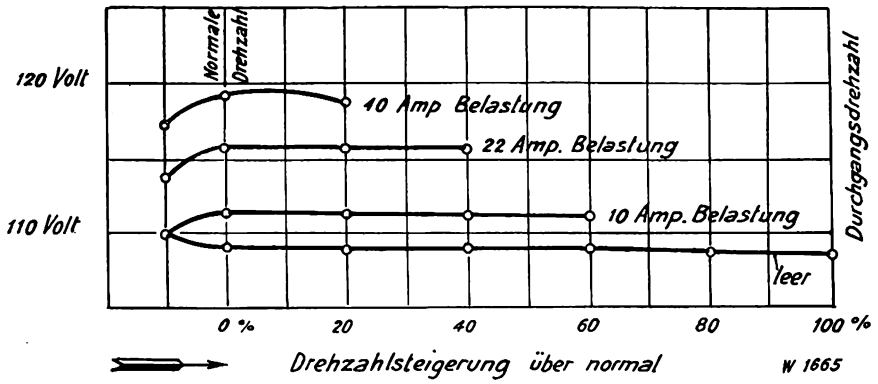

Fig. 3. Voltage characteristic of a direct current dynamo for variable speed.

Volt = Volts; Normale Drehzahl = Normal speed; Belastung = Load; Durchgangsdrehzahl = Racing speed; leer = No load; Drehzahlsteigerung über normal = Speed increase above normal.

connections are employed. This not only results in a saving in costs but also in a considerable improvement of the reliability in service. Apart from the fact that when using asynchronous machines complicated and expensive synchronizing devises are unnecessary, there are the advantages that in a case of breakdown an asynchronous plant cannot participate in the short-circuit, and that after switching off the short-circuit it at once attains the normal voltage and supplies energy, whilst in synchronous power stations synchronizing has to be performed anew after each breakdown.

For this reason it is quite justified to use asynchronous generators with auxiliary machines where higher outputs are concerned, and it is even possible to operate an asynchronous plant as an independent power station quite apart from the network by providing small pacing machines. The outer design of asynchronous machines differs but little from that of synchronous machines.

When employing synchronous machines for automatic plants, an automatic paralleling device is required. The power factor of the generators can be adapted to the special service conditions by corresponding excitation. Normally, the generator for a water power plant is designed for the full rating, which, however, in low-pressure plants with fluctuating head is attained only on comparatively few days during the year. It is, therefore, advantageous to increase the wattless current by means of a suitable automatic adjustment of the power factor to such an extent that the generator is always fully loaded with the additional wattless current, as this relieves the other machines working on the network, which then operate with correspondingly better efficiencies and higher effective outputs. For this reason it is advisable to provide an automatic regulation for constant current apart from the automatic voltage regulation. [5])

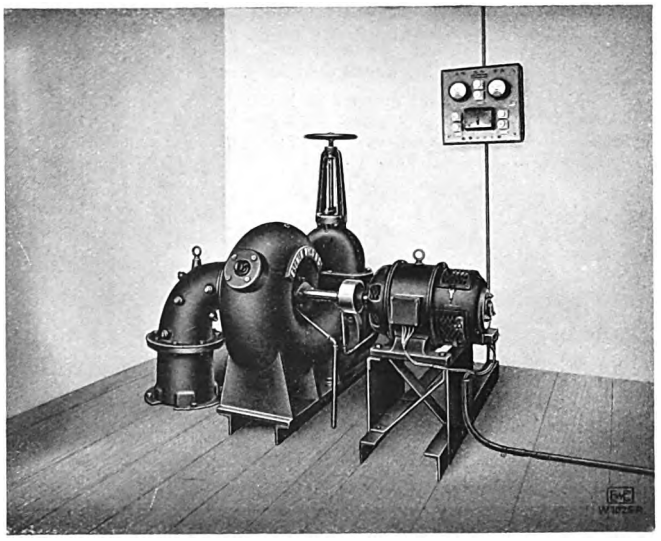

Fig. 4. Small water power plant with spiral turbine, dynamo and switchboard, erected in the testing station of Messrs. Escher Wyss & Co., Ravensburg.

The synchronous generator for automatic plants differs from the standard machines solely in the way it is started, which may be performed by two fundamentally different methods.

[5]) Power, Vol. 64, page 365.

Digitized by Google

1. Generator to be started as motor.

Instead of being started by hand, the set in this case is started up by asynchronously speeding up the generator at a low pressure and under the influence of the eddy currents arising in the massive pole shoes. This starting method requires a starting voltage of 1/3 to 1/2 of the normal machine voltage, which in modern plants with transformers, can be realised by providing corresponding tappings of the windings without entailing special expenses.

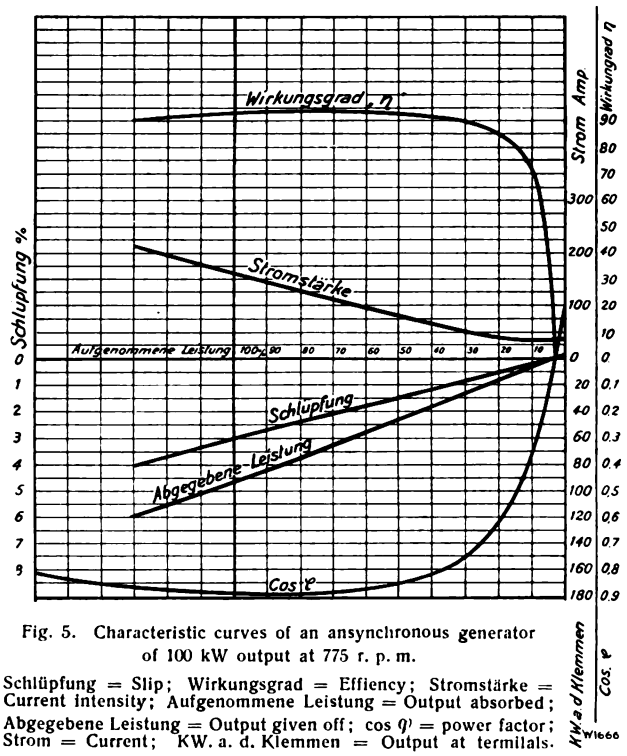

Fig. 5. Characteristic curves of an ansynchronous generator of 100 kW output at 775 r. p. m.

Schlüpfung = Slip; Wirkungsgrad = Effiency; Stromstärke = Current intensity; Aufgenommene Leistung = Output absorbed; Abgegebene Leistung = Output given off; cos φ = power factor; Strom = Current; KW. a. d. Klemmen = Output at termilals.

When starting up the power station, the line leading to the station is put under tension either from the main central station or from a substation whereby the transformer in the water power plant is energized. Its secondary voltage causes the switching-on relay to function, which in turn moves the machine switch into the starting position, whereupon the generator starts asynchronously. When the machine has nearly attained its synchronous speed, the exciter has reached a voltage, which automatically effects the switching on of the exciter switch. At the ensuing full excitation the generator automatically acquires synchronous speed. Switching over to the full line voltage is achieved by means of a time lag relay, which functions as soon as the full excitation is switched on. The machine, having already acquired its synchronous speed, now receives the full line voltage and runs as synchronous motor until the guide apparatus or the nozzle of the turbine have been opened and energy is supplied to the network. Switching on the turbine in the main necessitates an automatic opening of the closing organ. The hydraulic part of the plant has to be supplemented by comparatively few special devices, so that the extra costs for installing automatic service on the lines described above are small. Fig. 6 shows the diagram of connections for this starting method, which may be modified to suit the individual requirements of any plant. This system of wiring assumes connection with a main power station, the existence of a station transformer and a sufficiently high capacity of the network so that the unavoidable current surges arising when cutting in a machine do not endanger the network.

2. Generator for starting from turbine end.

Additional apparatus is required when the plant is started from the turbine end by means of an automatic paralleling device. In this case the plant can be put into service quite independently of the main power station if a battery for actuating the electrical auxiliary devices is provided in the power house. This system of connections necessitates an automatic oil-pressure governor for the turbine, whilst in the preceeding cases a water level regulator for keeping the head race water level constant and corresponding safety devices suffice provided the network is sufficiently large. However, the extra costs for the governor are in general not so high, that the economy of the plant is thereby affected. The plant is started from the turbine end by opening the closing organ (in low-pressure plants the sluice, in high-pressure plants the valve) by means of an hydraulically or electrically operated mechanism. The turbine must be so designed, that when shutting down the plant, it always assumes its initial position, i. e. that when starting and before attaining the normal speed, and without the governor operating an oil pressure sufficient for governing is reached in the governor oil pump. This requirement is generally easily satisfied because with most turbines a s m a l l e r opening is necessary for starting than for running idle.

As soon as the turbine approaches its normal speed limit, the oil-pressure governor takes over the speed regulation in the well-known manner. Similarly to paralleling by hand, paralleling is here performed automatically by means of a synchronizing

Digitized by Google

device [6]) in such a manner that the automatically connected electrical speed adjusting mechanism causes a slow increase of the turbine speed. A stable regulation at no load [7]) is of the utmost importance as excessive current surges and faulty connections are thereby avoided. If synchronizing cannot be effected because the coincidence of voltage and frequency required for paralleling cannot be attained owing to fluctuations in the network, then the speed adjusting mechanism is automatically reversed in the opposite sense at a speed lying about 3 per cent above the normal speed. As the speed of the turbine varies very slowly owing to the provision of reduction gears for the speed adjusting motor, paralleling will as a rule be reached after the first or second passage through synchronism. The higher the admissible difference of voltage between the network and the generator the quicker will paralleling in general be possible, but on the other hand the current surges will also be greater. If the capacity of the plant to be paralleled is very small compared with the capacity of the network, the paralleling equipment may be considerably simplified. The generator is excited whilst starting the machine and paralleled whilst passing the frequency corresponding to that of the network, whereupon the turbine, whose governor is adjusted to a higher speed than that corresponding to the frequency, at once automatically takes over the load, which was previously adjusted by a lift limiting device on the governor. In this case the plant is not exactly synchronized, and considerable current surges may, therefore, arise in the network. Fig. 7 illustrates diagramatically the connections of such a plant.

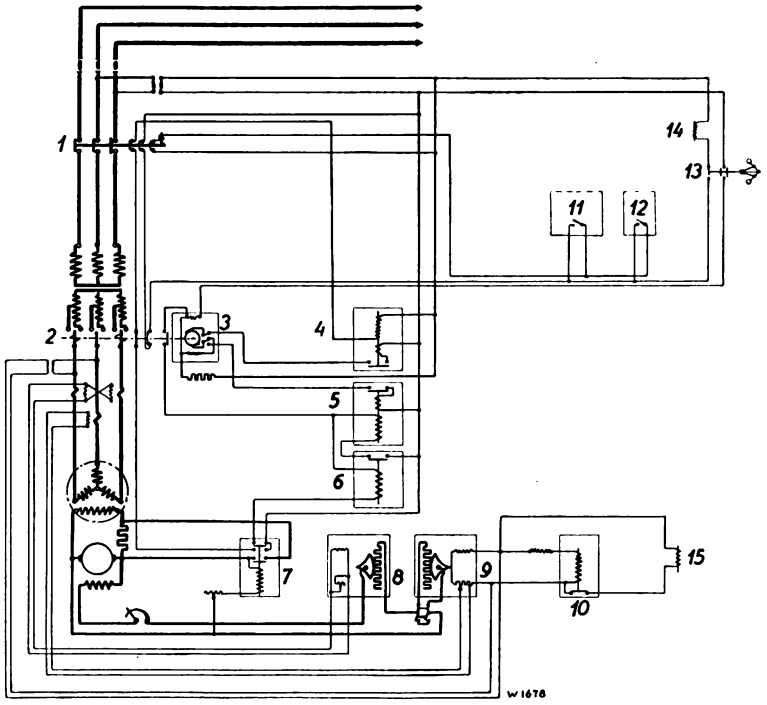

1. Main switch.
2. Starting switch.
3. Remote control for motor.
4. First switching-on relais.
5. Second „ „ „
6. Time lag relay.
7. Exciter switch.
8. Excess current regulator.
9. Quick-acting tension regulator.
10. Over-speed relais.
11. Differential relay.
12. Temperature relay.
13. Auxiliary contacts on turbine governor.
14. Holding magnet on turbine governor.
15. Holding magnet on turbine closing gear.

Fig. 6. Automatic switch gear for a synchronous generator starting motor.

The automatic synchronizing equipment can be considerably simplified by employing the Escher Wyss governor for automatic plants, Fig. 9.

The speed variation in either sense required for paralleling and hitherto performed by the speed-adjusting motor, is effected by means of an hydraulically operated auxiliary servomotor on the actuator with automatic reversing device until the machine to be paralleled has been synchronized. At the same

[6]) BBC-Mitteilungen, November 1923, pages 211/15, Kloninger: Das selbsttätige Parallelschalten von Synchronmaschinen und elektrischen Zentralen.

[7]) Schweizerische Bauzeitung 1927, Number 3, pages 170/173, Prof. Dr. E. Braun: Bericht über Versuche mit einem Turbinenregler der Firma Escher Wyss & Cie.

Digitized by Google

time this apparatus, which was described at length in the „Escher Wyss News", Volume I, 1927, Number 5, pages 143 to 145, prevents the turbine from load is quite automatically taken over after paralleling, so that with this comparatively small apparatus, which may be combined in a very neat

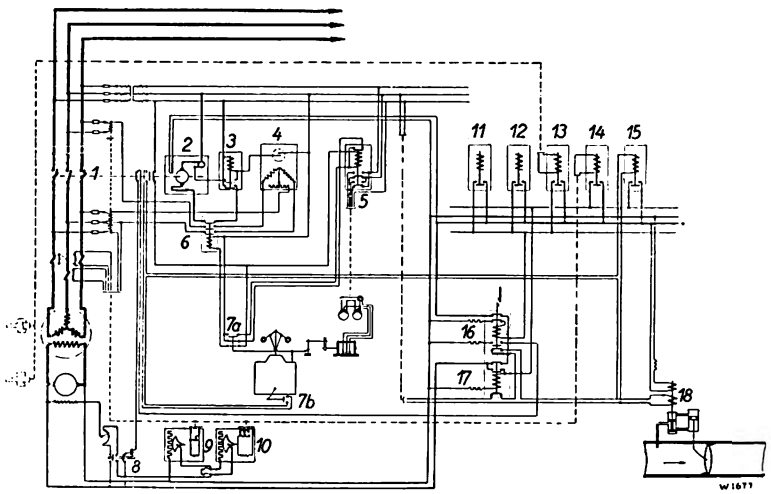

1. Oil-circuit breaker.
2. Remote control of motor.
3. Contact relay.
4. Paralleling apparatus.
5. Change-over relay.
6. Switching-on relay.
7. Auxiliary contact on turbine governor and servomotor.
8. Short circuiting device for magnetic field.
9. Excess current regulator.
10. Quick-acting tension regulator.
11. Differential relay.
12. Oil-pressure relay.
13. Temperature relay.
14. Maximum current relay.
15. Time lag relay.
16. Interlocking relay.
17. Switching-off relay.
18. Holding magnet.

Fig. 7. Automatic switchgear for independent operation of a synchronous generator with turbine drive.

racing should the oil-pressure fail. The special oil-pressure relay and the otherwise necessary electrical reversing switchgear are no longer required and the

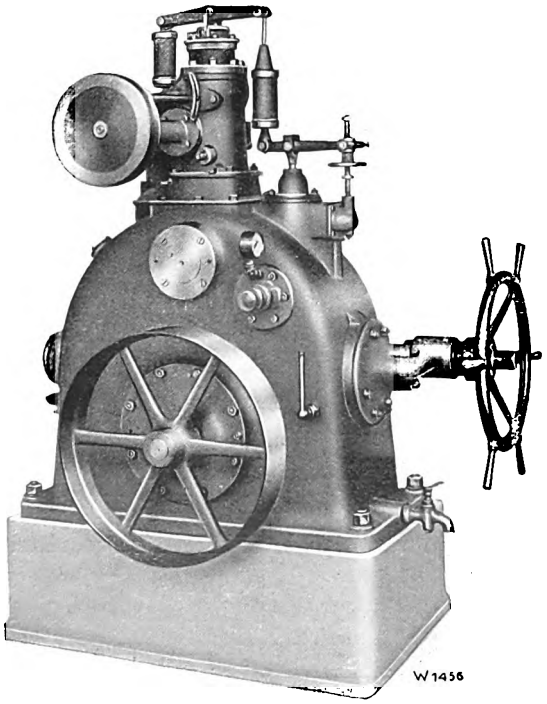

Fig. 9 Oil-pressure governor of modern design.

manner with the actuator of the patented Escher Wyss oil-pressure governor, great reliability in service and a saving of capital expenditure is attained.

There are numerous safety devices for the electric machines for avoiding lasting or temporary breakdowns. To avoid breakdowns outside the power station, which might lead to an overloading of the water driven generator, an excess current regulator, limiting the excitation to such an extent that even a lasting short-circuit current cannot damage the machine, must be provided apart from the usual protective devices,, such as differential and earth-protection. This obviates the undesirable tripping of the machine switch. As soon as the cause of the trouble has been eliminated, the excess current regulator automatically reestablishes the full excitation current to the machine and the tension regulator again takes over the regulation. Temperature relays are provided for the main bearings, similar to those for the turbines; it is advisable to use such relays also for the windings and for the governor and lubricating oil. Furthermore, the necessity of providing fire-extinguishing apparatus, which are of special value in automatic plants, should not be overlooked.

Digitized by Google

For temporary breakdowns, it is advisable to arrange matters so that the plant is automatically switched on again after the lapse of a certain time. In the case of failures, which can only be remedied by the attendants, the turbine is shut down and the starting relay interlocked in such a manner that the machine can be restarted only after eliminating the fault. The choice of the protective apparatus and the mode of connecting varies according to the local conditions and service requirements. The lubricating devices of the different bearings are of special design. As far as horizontal bearings are concerned, normal bearings with ring lubricators may be used without hesitation for automatic plants. For vertical bearings of larger dimensions oil lubrication as used for larger units will as a rule be indispensable and a special oil circulating pump or worm will have to be provided. Grease lubrication may be employed for bearings which are not heavily loaded and the peripheral speeds of which are less than 6 ft/sec. For this purpose a grease press actuated from the turbine shaft, or Stauffer lubricators with air cushion permitting of automatic lubrication for a week to a fortnight without further adjustment can be used. Such Stauffer lubricators are employed in automatic plants also for the guide blade regulating mechanism and have thus far proved very satisfactory. With turbine shafts running at higher speeds and having a greater peripheral velocity, the centrifugal force has occasionally been utilized for pressing the oil from an

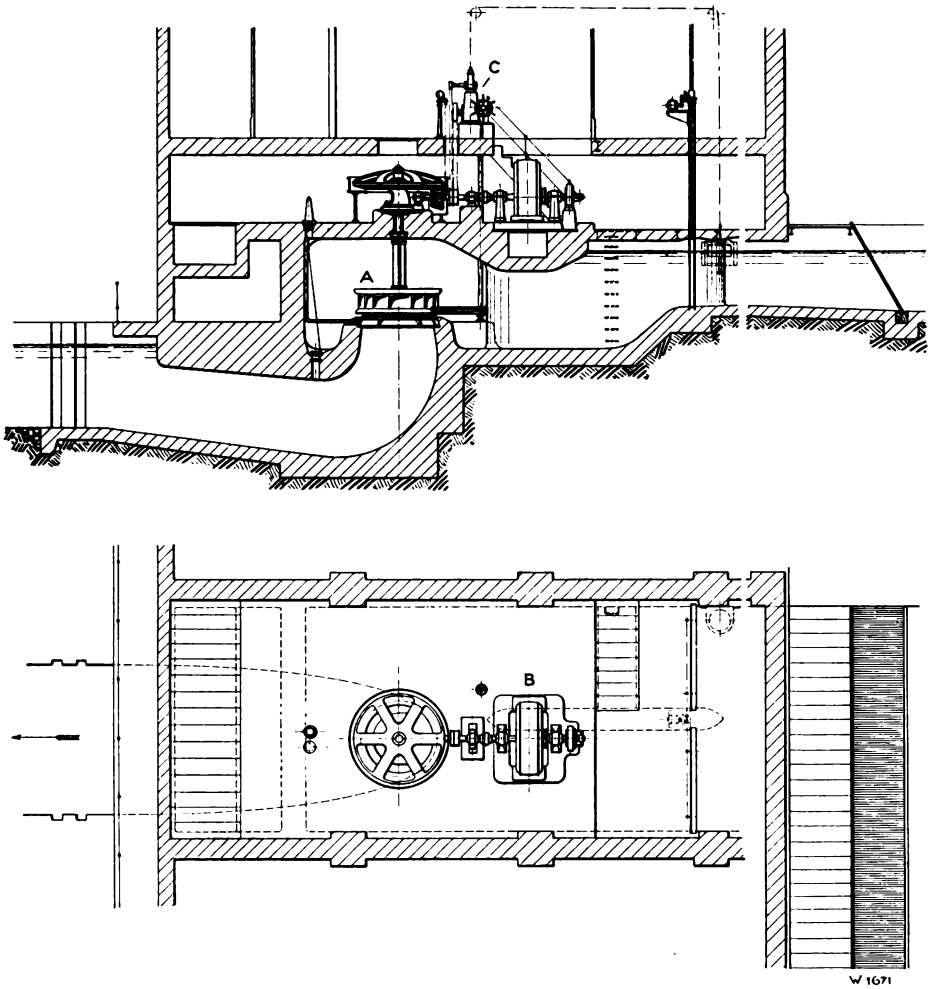

Head	7.8	8.25	9.5 ft	Output	121	130.5	156 HP.
Quantity of water	1045	1065	1110 gals/sec.	Speed		107	r. p. m.

Fig. 8. Vertical Francis turbine with wood-iron bevel-wheel gear for automatic service.

Digitized by Google

oil reservoir, which rotates with the shaft, into the upper part of the journal bearing whilst the turbine is in operation.

In the low-pressure plant illustrated in Fig. 8, a vertical Francis turbine drives the horizontal generator by means of an iron-wood bevel wheel gear. When shutting down the turbine the guide apparatus remains so far opened that on opening the sluice, the turbine attains its normal speed without the aid of the governor. Paralleling is performed in the manner last described by cutting in the switch on reaching the frequency of the network, without special phase compensation.

The standard oil-pressure governor is equipped with a regulating mechanism controlled by a float, which, when the head race water level sinks below a certain adjustable height, closes the guide apparatus so that only the available flow of water is completely utilized at the full effective head. The pendulum of the governor and the oil-pressure pump are driven by means of belts. Should the pendulum belt fall off the pulley, the plant is automatically stopped by the action of a valve situated on the governor. Should the belt driving the oil pump break or the oil supply fail, an oil-pressure relay with spring-balanced piston, or a jockey pulley connected to a switch, shuts down the turbine.

At the same time the turbine sluices are closed to prevent unnecessary running on of the turbine.

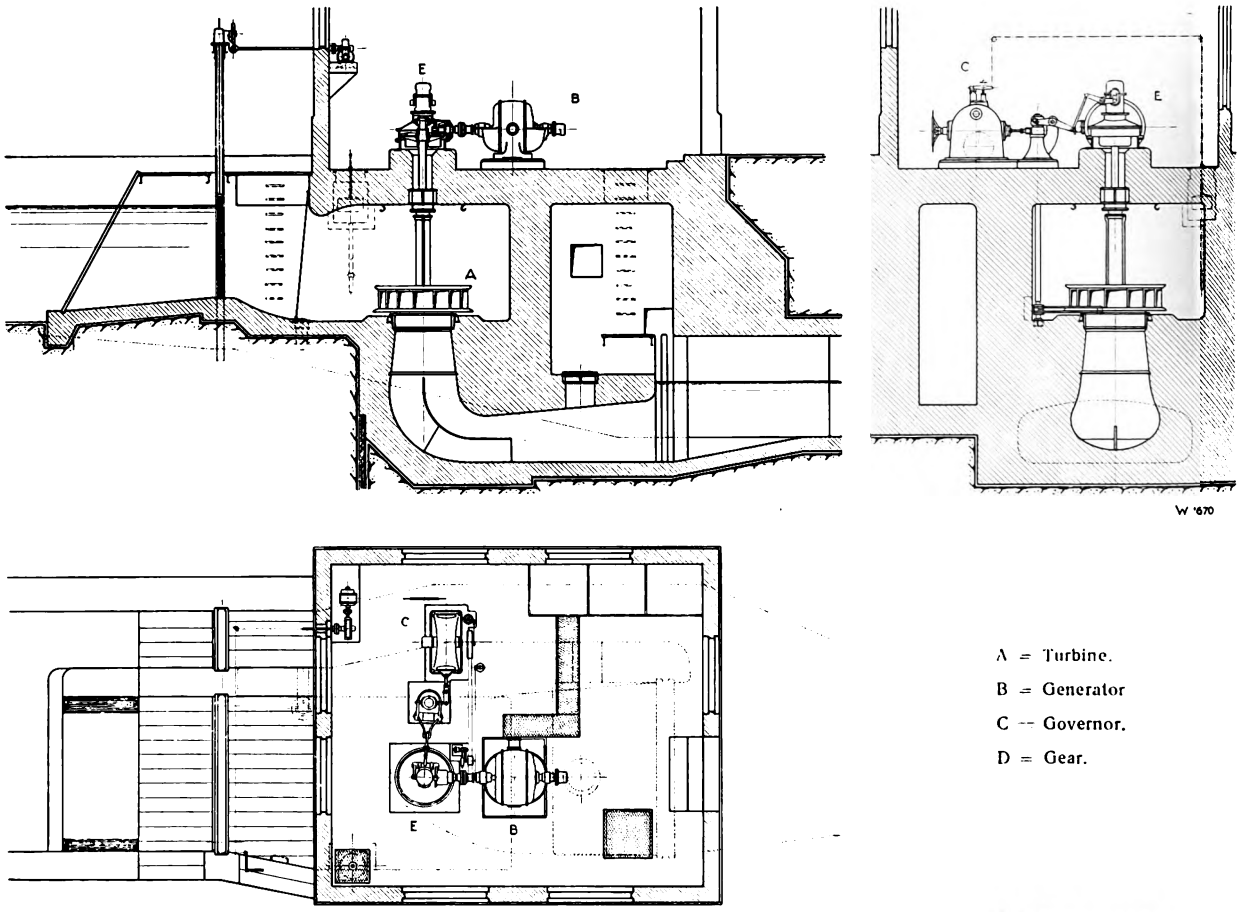

Fig. 10a. Kaplan turbine with bevel wheel gear for automatic service, Weisseritz-Mühlgraben plant of the German State Railway Administration in Dresden.

The former must, therefore, be equipped with a reversible drive, and the sluice plates weighted to such an extent that on the release of a catch, the sluices are reliably closed by their own weight. Where the sluice plates have to drop from a considerable height, the final velocity has to be duly considered and, if needs be, oil brakes provided. The tripping of the closing device of the sluice winches is effected by means of an electro-magnet, and the raising of the sluice plates when starting up the plant by means of the usual electric drive. Special

Digitized by Google

attention must be paid to the lubrication of the plant. The most important bearings are equipped with a temperature relay. The cooling water piping is also provided with safety devices operating in connection with contact flow indicators, which prevent in time the seizing up of the bearings. In

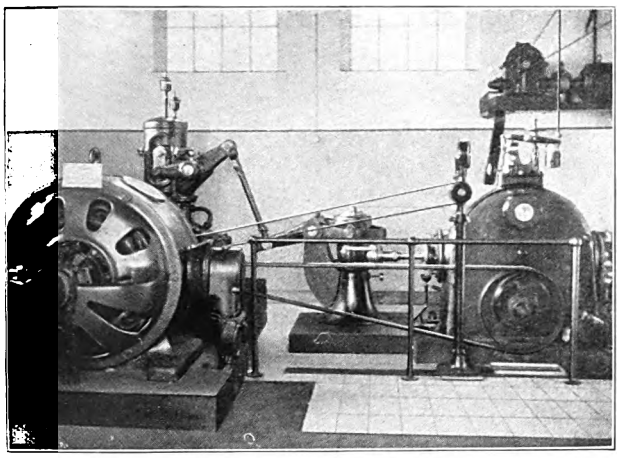

Fig. 10b. Kaplan turbine plant Weisseritz-Mühlgraben of the German State Railways Administration in Dresden.

many plants, the use of grease lubrication for individual parts cannot be avoided. The Stauffer lubricators with air cushion are sufficiently reliable for the purpose; however, the plant should be inspected once a week. The switchgear for the electrical machines is comparatively simple in spite of the many safety devices. The first starting up of the plant may be performed in the power station itself by means of a push-button control, or by remote control. All other switching manœuvres are performed automatically.

In many cases full-automatic service will not be found necessary and semi-automatic operation will meet the requirements as in the plant Weisseritz-Mühlgraben owned by the German State Railways Administration in Dresden, Fig. 10a, and described hereunder. The turbine is destined to take over the basic load of a main station and is equipped only with a water level regulator and a safety pendulum, which acts if the turbine commences to race and, by switching off the excitation, prevents an excessive rise of the voltage in the windings of the generator, whilst the turbine, gear and rotor of the generator are designed for the maximum over-speed. In case of a failure, the turbine sluice is closed and the turbine stopped.

The water level regulator with oil-pressure servomotor in its action corresponds to a normal oil-pressure governor without pendulum. The control is effected by means of a float with wire rope transmission arranged inside the power house. This appliance allows of utilizing the available flow with the maximum effective head. The inlet and waste sluices are equipped with an electrical drive common to both, which acts in such a manner that when the inlet sluice is opened, the waste sluice is closed and vice versa, so that the water under no circumstances is banked up in the canal, where a number of other plants are installed upstream and downstream.

The runner wheel and guide wheel adjusting mechanisms of the Kaplan turbine with hollow shaft are positively interconnected and simultaneously adjusted.

The unusual shape of the building in the tail race was rendered necessary by the existing structures.

The bevel wheel gear between the turbine and generator, which increases the speed from 285 to 1000 r. p. m., is contained in a totally enclosed casing. The tooth flanks are carefully machined and ground on special machines and, therefore, ensure practically noiseless running.

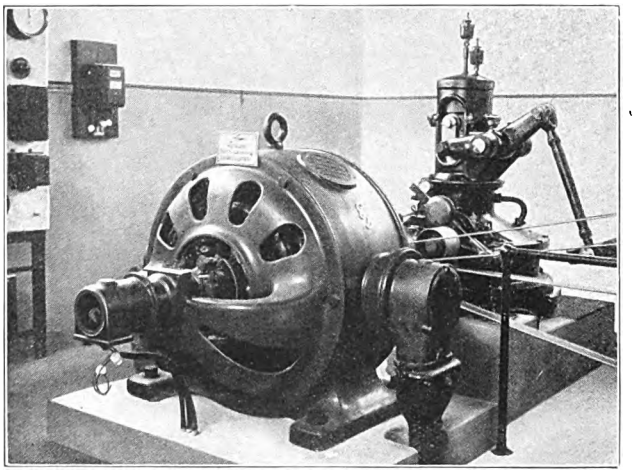

Fig 10c. Kaplan turbine plant Weisseritz-Mühlgraben of the German State Railways Administration Dresden; gear with supperposed runner wheel adjusting mechanism for the Kaplan turbine.

Further details may be taken from the illustrations Figs. 10 b and 10 c.

The plant is started and stopped by hand. The output of the generator is transmitted to the main power station by means of a cable and there control-

Digitized by Google

led by the measuring instruments. Any failure arising from defects in the machinery or choking of the grating is at once noticed on the control instruments. The extra costs as compared with the

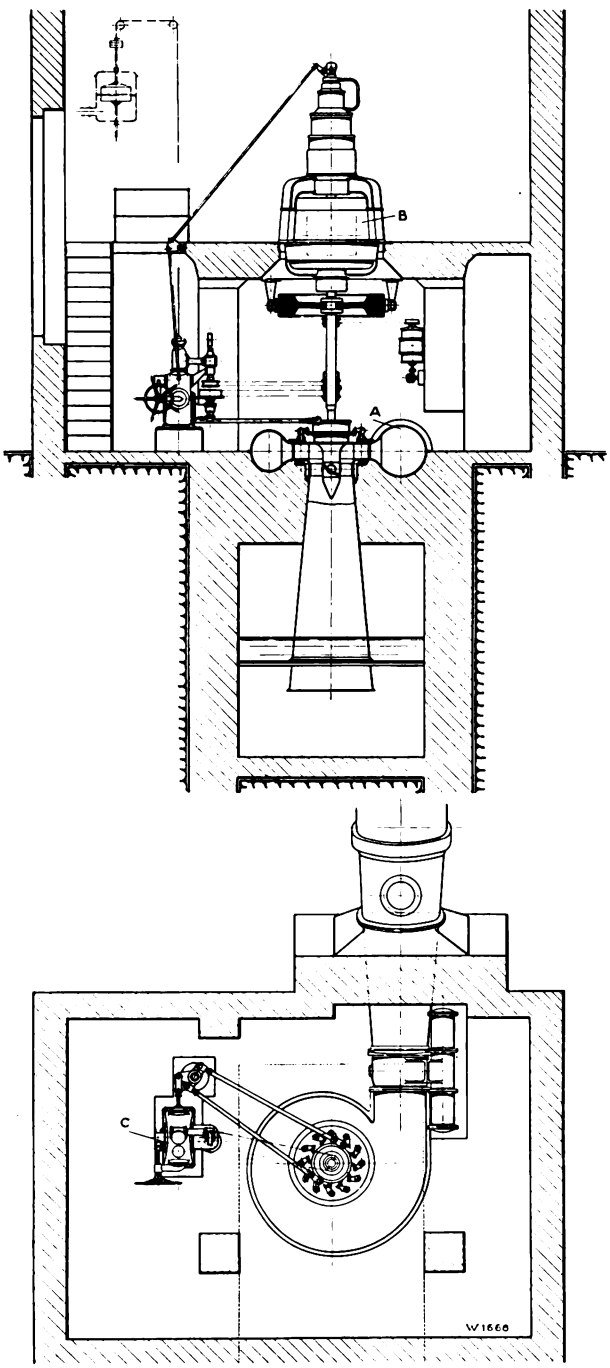

A = Turbine. B = Generator. C = Governor.

Fig. 11. Vertical Kaplan turbine with cast-iron spiral casing and direct coupled generator.

costs of a normal turbine plant are exceedingly low and the usual staff of attendants can be entirely dispensed with, as the supervision of the plant may be performed by the staff of the main station without entailing extra expenses.

Figs. 11 and 13 a, b and c illustrate a power station containing a vertical shaft Kaplan turbine in a cast-iron spiral casing with external regulation and direct-coupled generator for the Municipal Electricity Works Mylau in Saxony, which was executed according to the plans of Dr. Ing. Fritz Maier, Karlsruhe and Mittweida, and erected under his supervision. A special type of governor was supplied for this plant in order to be able to drive the oil pump and pendulum by means of horizontal belts. The comparatively long pipeline necessitated the provision of a heavy flywheel, Fig. 13 a. Owing to the long time taken by the turbine to come to a standstill after it has been shut down, there is a possibility of metallic contact between the gliding surfaces of the thrust bearing shortly before the turbine stops. For this reason a special brake was provided, which is automatically operated by compressed air when the speed exceeds an inadmissible limit. The water is conducted to the turbine in a closed pipeline, which is opened and closed by a hydraulically controlled throttle valve. The runner wheel and guide wheel blades are automatically adjusted, the adjusting mechanism being so designed that when shutting down the machine set, the runner wheel and guide wheel are opened for starting. A regulating device with float is connected with the head race through a special pipeline and prevents an inadmissible sinking of the head race water level. However, in view of the frequent and rapid fluctuations of the inflowing water, this device is so arranged that the turbine is gradually stopped only after a considerable drop of the water level. The plant is linked up with the network by means of the normal synchronizing gear with automatic voltage regulator and excess current regulator according to the diagram of connections shown in Fig. 7.

A very similar Kaplan turbine, Fig. 12, was used in another plant with open flume. Instead of the cast-iron spiral, a concrete spiral with open intake was provided. The arrangement of the governor and generator is the same as illustrated in Fig. 11. The adjusting mechanism for the runner wheel operated by hand acts independently of the guide wheel adjusting mechanism by means of a movable sleeve on the vertical turbine shaft. The turbine serves to take over the basic load and was so designed as to require a minimum of attendance. It is started by hand and automatically stopped in case of a failure. As the inflowing quantity of water generally fluc-

Digitized by Google

tuates but little from day to day, the runner wheel adjusting mechanism is correspondingly adjusted during the daily inspection round. Occasional faulty adjustments of the runner wheel and the reduced efficiency resulting therefrom are of no importance and are counter-balanced by the considerable saving in attendance costs. On the other hand, there is no difficulty in operating the runner wheel adjustment automatically in connection with the guide wheel adjustment, as mentioned above. A Kaplan turbine for an output of 3450 HP at a head of 30 feet for full-automatic operation is now in course of construction. This vertical shaft turbine is direct-coupled to an asynchronous generator and is at the time of writing the largest automatic Kaplan turbine set in existence.

In high-pressure plants with storage possibilities a permanent utilization of the available flow is not required. Therefore, the service conditions generally differ, is so far as it is desirable to switch the plant on and off in accordance with the load on the network. The plant will in most cases be equipped for remote control, and suitable water level and load indicators in the station will facilitate the control of the service conditions. High-pressure plants without storage possibilities are equipped in the same manner as the low-pressure and medium-pressure plants described above.

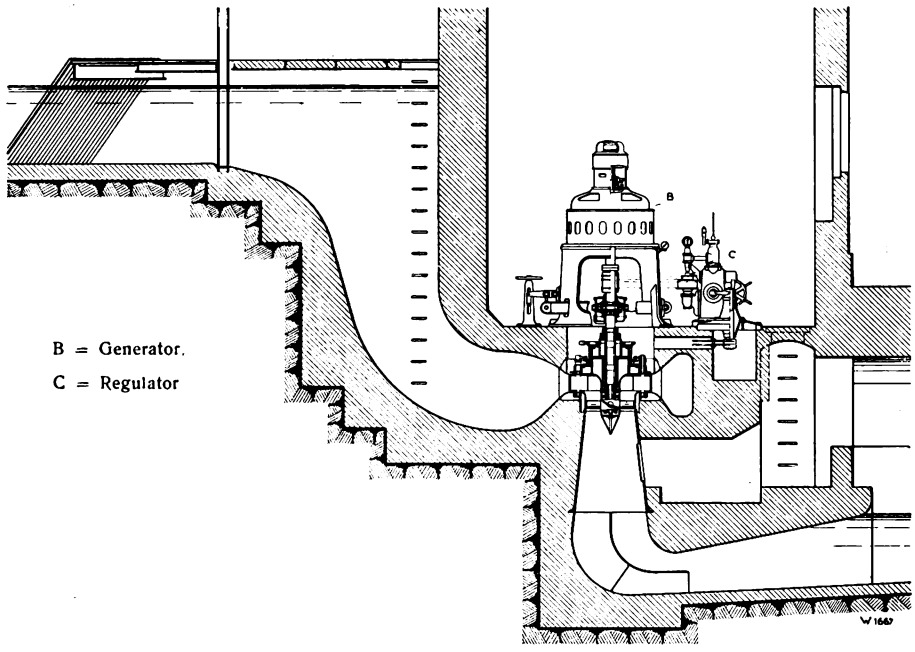

Fig. 12. Sectional elevation of a Kaplan turbine of medium output, concrete spiral, runner wheel adjustment by hand.

Of late, separate governors have been installed in large and medium-sized plants for the runner wheel and guide wheel adjustment. If a suitable closing time be adopted for the servomotor of the runner wheel adjusting mechanism, it is possible thereby to create a further safety against racing of the turbines, should by chance the guide apparatus not close. By a suitable design of the runner wheel adjusting mechanism it is even possible to maintain the service at a lower efficiency by means of the runner wheel governor alone.

The high-pressure plant illustrated in Fig. 14 is designed for an output of 3000 HP under a head of 308 ft.; all its mechanisms operate entirely automatically in correct sequence by remote control. Faulty switching and faulty manœuvres are thereby completely avoided.

The spiral turbine of normal design is governed by an oil-pressure governor of modern construction, which is supplemented by other apparatus to meet the requirements of automatic service. To begin with, a long-distance water level control is provided, which prevents undue sinking of the head race water level. When the head race water level drops, a valve of the auxiliary pump is gradually closed, and the opening of the guide apparatus of the turbine

Digitized by Google

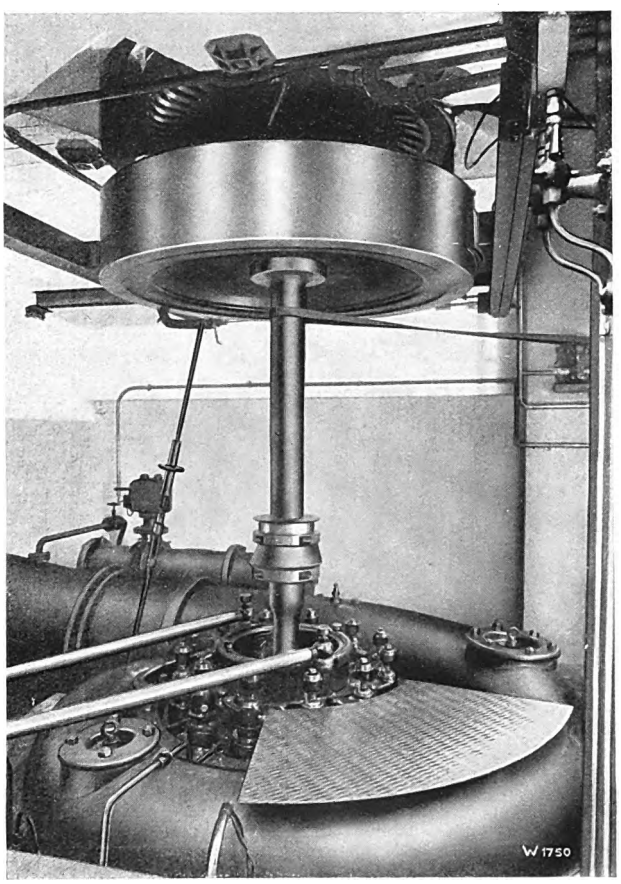

Fig. 13a. Turbine with flywheel and brake for stopping.

limited at the governor by means of a pressure piston influenced by the increasing pressure of the pump.

In order to have the oil pressure for operating the guide apparatus available at any moment, the oil pump is driven by a small Pelton turbine, which is started up before opening the closing mechanism, in thise case, a rotary valve of Messrs. Escher Wyss & Co's patented design. When the oil-pressure fails, an oil-pressure relay trips the closing magnet for the rotary valve and shuts down the plant.

Apart from the pendulum on the governor, which under normal conditions takes over the speed regulation, a safety pendulum is provided on the turbine shaft to prevent the maximum speed being exceeded. This safety pendulum also closes the rotary valve when the guide apparatus is jammed by a foreign body, as in this case the governor, even when functioning satisfactorily, would not be able to prevent the turbine from racing. The rotary valve itself is hydraulically operated and controlled by a special valve with lifting magnet.

The servomotor of the oil-pressure governor is adjusted by means of stroke-limiting screws in such a manner that the turbine can only be closed so far that it can start again when put under pressure. The contact thermometer on the turbine bearing effects the closing of the rotary valve as soon as the oil temperature exceeds 175° Fahr. The plant can be started either by remote control or in the power station itself. The speed adjusting device on the governor is adjusted so that after paralleling the turbine, the latter at once develops its full output.

As the extra costs for automatic operation of water power plants are relatively low it is advisable to make provisions for the instalment at a later date of the apparatus required in plants, which were originally intended for non-automatic operation.

A low-pressure or medium-pressure plant situated on a river can generally not be operated quite automatically as the grating at the intake can rarely be equipped with all the apparatus required for automatic service. Even when using automatic grating cleaning machines, it would be a difficult task to automatically remove the refuse collected from

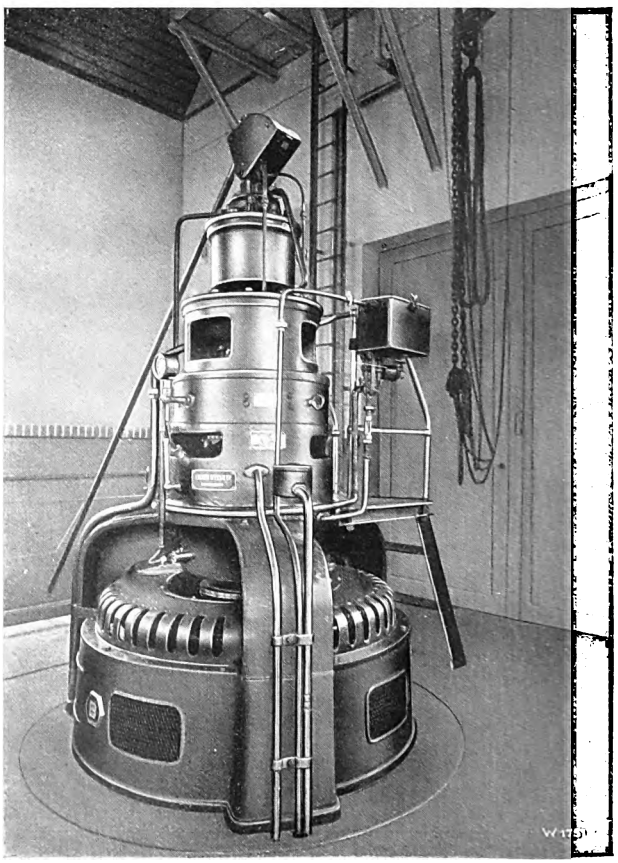

Fig. 13b. Generator with adjustment for thrust bearing and runner wheel.

Digitized by Google

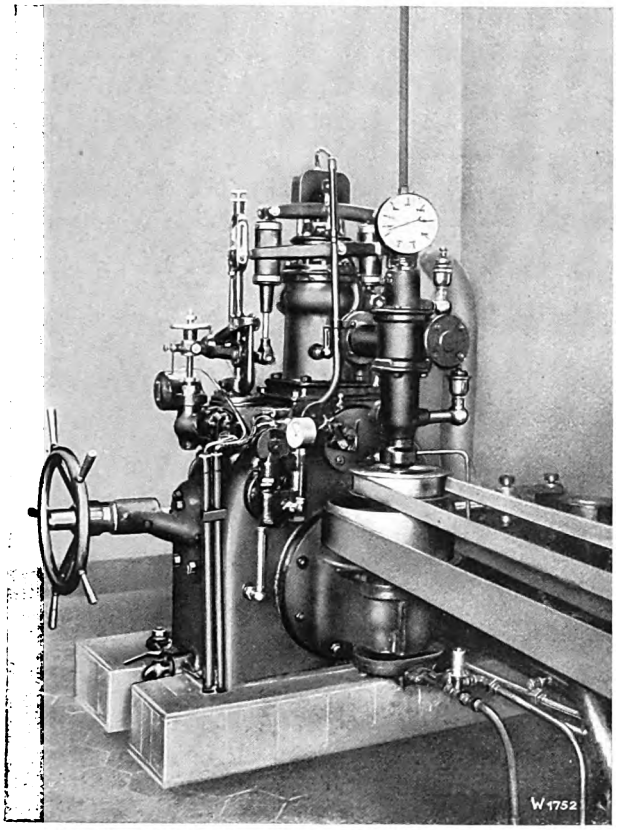

Fig. 13 c. Oil pressure governor with vertical driving shaft for pump and pendulum.

the grating. Therefore, in spite of all auxiliary apparatus, a periodical cleaning of the grating will have to be performed if the water is not absolutely clean.

It is, therefore, advisable to renounce expensive equipments required for automatic starting of the plant, as that may generally be performed by hand without great loss of time and costs. Nevertheless, the plant should always be laid out so that it does not require permanent attendance, the latter being restricted to an inspection once a week, which may be done by the machinist. When a secondary station is directly linked up with the main station and no consumers are connected to this line, many possibilities of control are given by providing auxiliary lines.

Fig. 15 illustrates a Francis turbine plant in which the electric current is utilized for driving the lineshafting of the factory and especially to produce steam during the night in Revel boilers of Messrs. Escher Wyss & Co's patented design. The horizontal duplex turbine is direct coupled with a normal three-phase generator and has an output of 250 HP at a head of 14 ft. and a water quantity of 1110 gals./sec. The excess energy is conducted to two Revel boilers

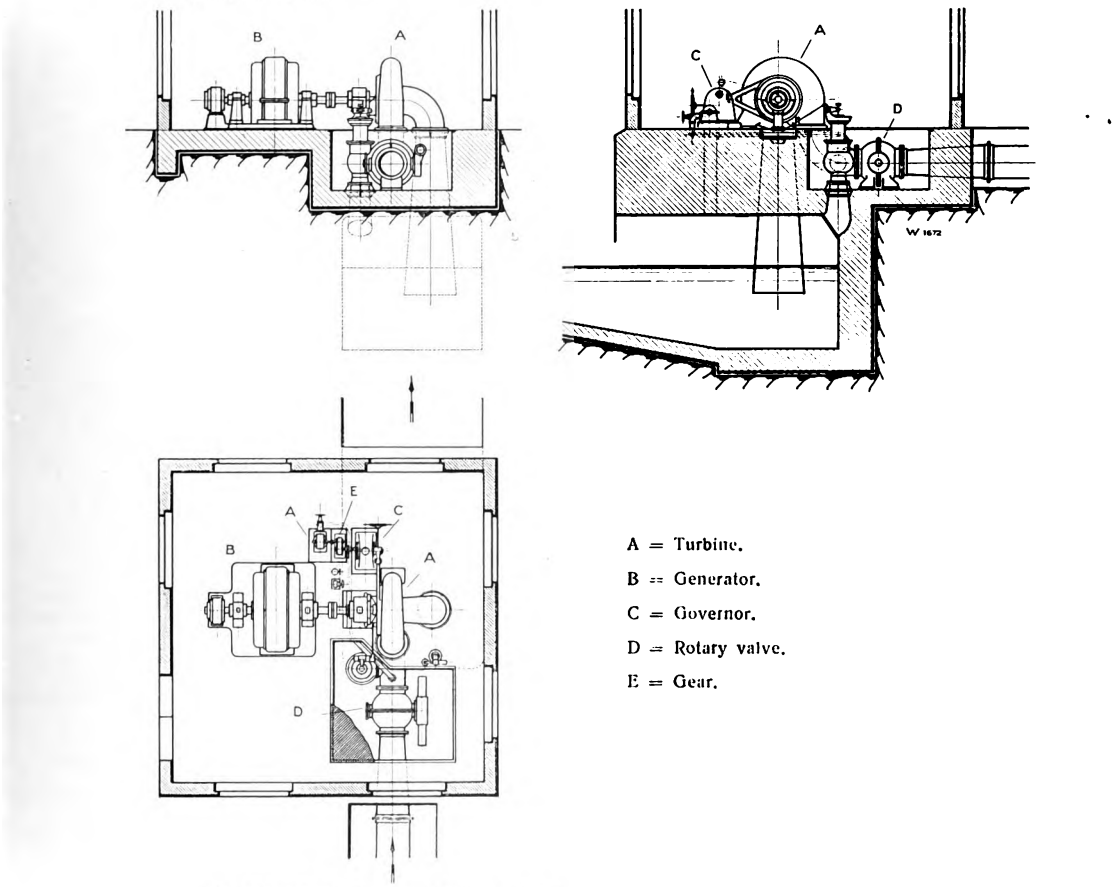

A = Turbine.
B = Generator.
C = Governor.
D = Rotary valve.
E = Gear.

Fig. 14. High-pressure turbine plant for an output of 3000 HP and automatic operation.

Digitized by Google

with three electrodes each, which are immersed in the water to be evaporated. The plant is regulated by the water level in the boiler, which fluctuates automatically according to the available energy.

A similar equipment was furnished for the first time by Messrs. Escher Wyss & Co. for a power storage plant. A horizontal duplex twin turbine with total available flow is thus economically utilized independently of the attention of the machinist and at the same time a sinking of the head race water level and the provision of a regulating device controlled by a float avoided.

The above remarks prove that it is possible to satisfy all requirements regarding the automatic

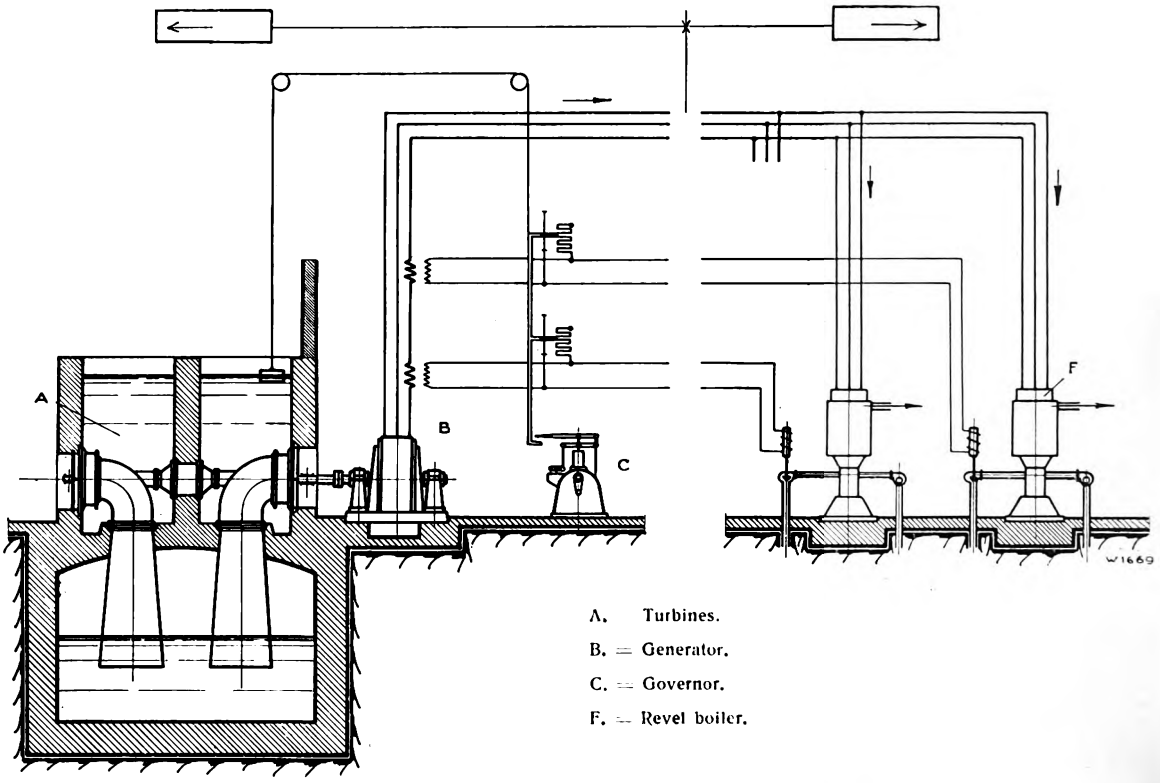

Fig. 15 Diagram of an automatic Revel boiler plant for excess current.

a maximum output of approximately 900 HP is rigidly coupled on one side with a generator and on the other side with a high-pressure storage pump through an electro-magnetic clutch, which can be engaged and disengaged whilst the set is running. As soon as the output of the generator decreases to such an extent that the pump may be put into service the electro-magnetic clutch is engaged. The operation of a plant. The apparatus required mainly depend on the extent to which automatic operation is to be applied. Experience teaches that it is advisable to render every plant as independent as possible of the attention of the machinist, the more so, as the costs of the automatic equipment are comparatively low and the plant may be more efficiently utilized.

Publishers: Escher Wyss & Co., Zurich (Switzerland).
Printed by: Siegfried & Co., Zurich (Switzerland).
London Office: Escher Wyss & Co., 20 Grosvenor Gardens, Westminster, London S. W. 1.
Tokyo Office: Escher Wyss & Co., Marunouchi Building, Room 322, Tokyo.
New York Office: National Power Machinery Corporation, 2 Rector Street, New York.

Digitized by Google

a 8'31

ESCHER WYSS NEWS

Volume II

2

March-April 1929

Published by Escher Wyss & Co. S. A.

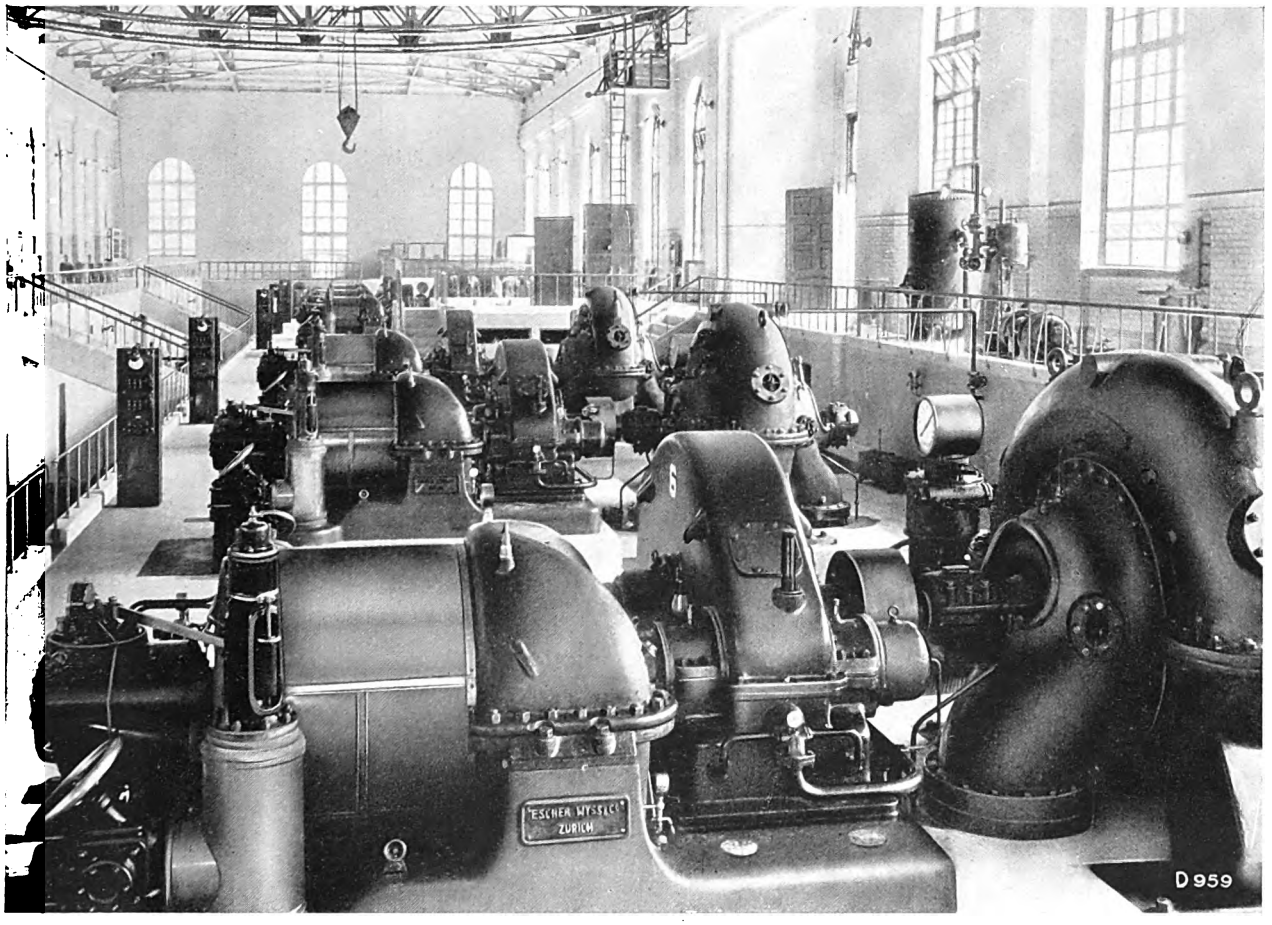

The Osaka Water Works (Kunijima Central Station). The largest and most modern pumping plant in Japan.

Contents

	Page
1. The Osaka Water Works (Kunijima Central Station). The largest and most modern pumping plant in Japan	43
2. The Zoelly steam turbo-locomotive (Conclusion)	46
3. The thickness of the walls of rectangular hollow bodies	51
4. Modern marine turbines of small outputs	58
5. Comparison between a steam turbine and a reciprocating engine as prime mover for paddle wheel tugs	65
6. Grating cleaning machines	73

AGENTS FOR UNITED STATES
THE NATIONAL POWER MACHINERY CORP.
2912 CHANIN BLDG., NEW YORK

Digitized by Google

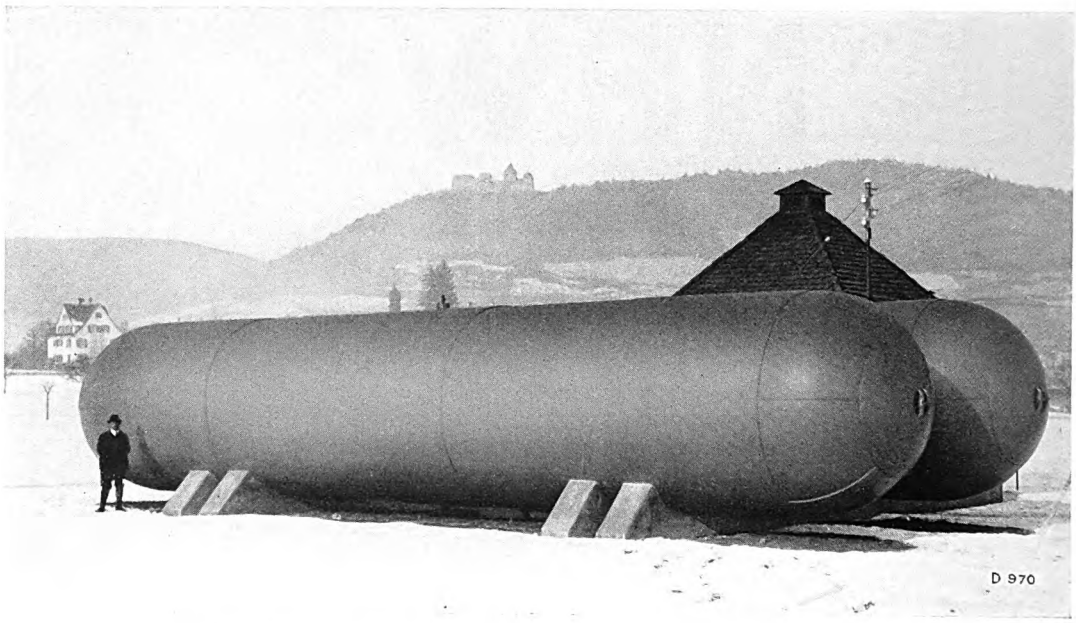

View of the high-pressure gas storage plant erected in Stein on Rhine in 1928.

First Swiss high-pressure gas storage plant of the Constance Gas Works in Stein on Rhine

Effective capacity 8825 cub. ft.

71 lbs./sq. in. pressure.

Built by Messrs. Escher Wyss & Co.

Digitized by Google

ESCHER WYSS NEWS

PUBLISHED BY MESSRS. ESCHER WYSS & Co. S. A.

VOLUME 2 | No. 2 | MARCH-APRIL 1929

The "Escher Wyss News" will be published periodically in bi-monthly issues. Reprinting of articles or illustrations appearing therein will only be permitted when source thereof is duly acknowledged. Single numbers 1/6; one year's subscription 7/6.

The Osaka Water Works (Kunijima Central Station). The largest and most modern pumping-plant in Japan.

By H. Bauer.

The rapidly increasing water consumption of the City of Tokyo rendered it necessary to considerably increase the output of the municipal pumping plant. The existing plunger pumps could no longer cope with the increased demands. An enlargement of the station capacity by the erection of further plunger pumps could not be entertained owing to the lack of space. The station building itself also could not be enlarged, and so there remained the sole possibility of increasing the station capacity by providing turbo sets supplying the highest output per unit of space. By adopting steam turbo-pumps with favourable efficiencies, the capacity of the water works was to be raised to a maximum.

Professor Dr. Tomonaga was appointed as expert to investigate the problems involved. It was at once evident that the excellent results hitherto gained with geared steam turbines warranted their adoption in the present case. Thanks to a gear inserted between the turbine and pump, both the former and latter may be run at speeds giving the best efficiency.

After a careful scrutiny of the tenders received, Messrs. Escher Wyss & Co. were entrusted with the first instalment of machines comprising three turbines, pumps and condensing plants.

For the prevailing conditions, the speed of the turbines was fixed at 7500 r. p. m. and that of the pumps at 680 r. p. m.

According to the stipulations of the contract, extensive tests were carried out with the sets on our test bed before delivery and it was found that the good efficiencies guaranteed were easily attained.

All three sets were at once put into service in the station of the buyers and operated without a hitch. The subsequent official taking-over tests not only confirmed the test bed results, but proved that the guaranteed efficiencies were even surpassed. The buyers, therefore, paid Messrs. Escher Wyss & Co. a considerable premium and after the lapse of 6 months placed an order for three more similar sets.

The frontispiece illustrates the station with its full equipment of six turbo-sets; the same space was formerly occupied by nine steam plunger pumps of considerably smaller total output.

The results of the official acceptance tests are published at the end of this article. A description of these interesting pumping sets will now be given. The six turbines of the Zoelly system are designed as impulse turbines. Fig. 2 is a section of such a turbine, which at its normal rating of 1400 HP develops its best efficiency. An auxiliary valve, however, permits of attaining the maximum overload output of 1900 HP guaranteed by contract.

The turbine is a standard type machine, whose speed was fixed at 7500 r. p. m. in order to attain the good efficiency referred to above. A reduction gear manufactured by the firm of Krupp in Essen reduces the speed to 680 r. p. m., which is the most favourable speed for the pumps. The gear ratio is, therefore, 11 to 1.

AGENTS FOR UNITED STATES
THE NATIONAL POWER MACHINERY CORP.
CHANIN BLDG., NEW YORK.
Digitized by Google

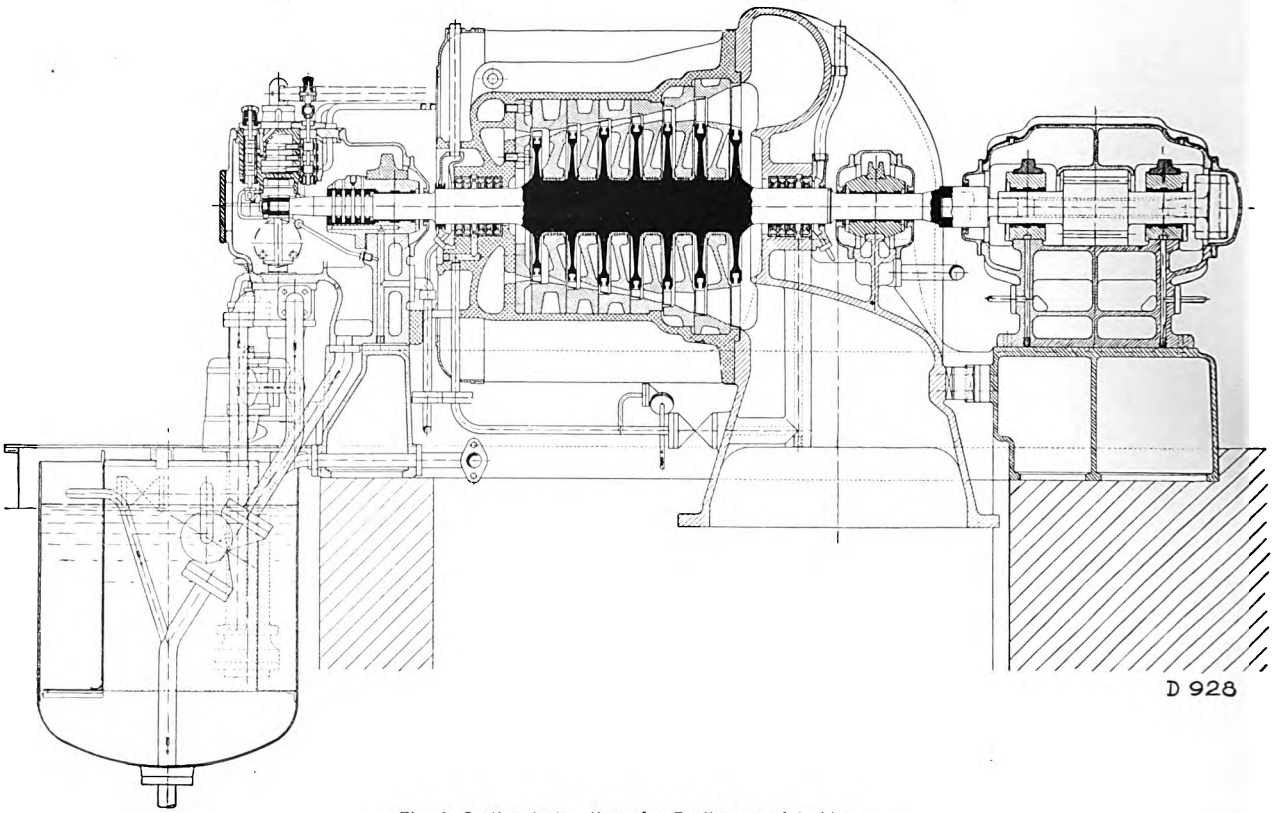

Fig. 2. Sectional elevation of a Zoelly geared turbine.

The gear parts are made of high-grade materials, the pinion consisting of best chromium-nickel steel and the gear wheel of first-quality special steel. An elaborate description of such geared turbines and their advantages was published in the «Escher Wyss News» No. 3, 1928; we would here only repeat that in spite of the high speed, the rotating parts are only stressed within quite normal limits, i. e. the stresses are not higher than with turbines of 3000 r. p. m., whilst the turbine efficiency is considerably higher.

The turbine rotor is made from one single forging. The blades are inserted in such a manner as to ensure ample clearances both in the axial and radial direction. The oil supply for the governing mechanism and bearings is provided by separate toothed wheel oil pumps, whilst a small steam turbine driven oil pump supplies the oil when starting the set. The forced oil lubrication for the gear and gear bearings is quite independent of the other lubrication and is supplied by a small toothed wheel pump driven from the pinion. A separate oil cooler is also provided.

The one-stage high-pressure centrifugal pump with horizontal shaft is illustrated in Fig. 3. The pump was so designed that a maximum efficiency is attainable over a wide range of its output. The speed of the turbine and pump is easily varied by ± 6 per cent in order to meet the considerable fluctuations of the water consumption. Under normal conditions the most favourable pump efficiency is attained for a water volume of 3283 cub. ft. per minute under a head of 182 ft. The speed of the pump is thereby 680 r. p. m. At a 6 per cent higher speed and a head of 182 ft. the pump delivers 4236 cub. ft.

The cast-iron spiral casing of the pump is provided with two suction branches. The impeller is made of a special bronze, the shaft of Siemens-Martin steel lined with bronze bushings. Hydraulic stuffing boxes at the suction branches prevent the influx of air. The water discharged by the impeller is conducted through a diffusor where the velocity is transformed into pressure with a minimum loss. Although the hydraulic axial thrust is theoretically balanced, yet the bearing opposite the coupling end

Digitized by Google

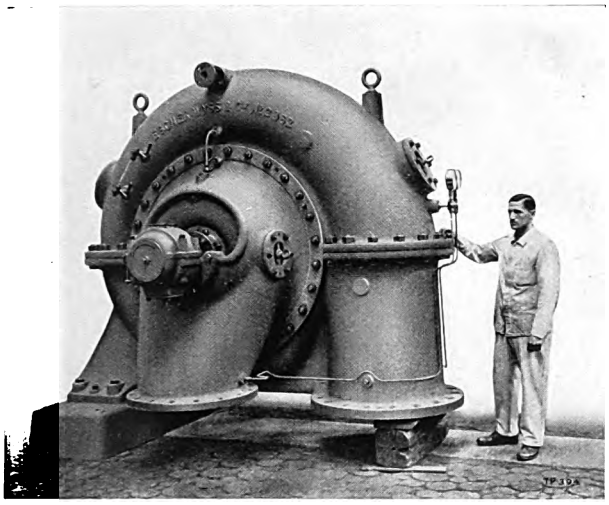

Fig. 3. High pressure centrifugal pump for Osaka.

is combined with a special device, which takes up any axial thrust that might result in practical service.

Each turbine is connected to its own surface condenser of 1873 sq. ft. cooling surface.

The cooling water pump of the condensing plant delivers 19 170 cub. ft. per hour, drawing the water from the suction canal of the main pump. The water is discharged again into the suction canal after flowing through the condenser. A rotating water jet pump is provided for deaerating the condenser, whilst a normal centrifugal pump conveys the condensate.

All three pumps of the condensing plant are mounted on a common bedplate and driven by one motor. As soon as the current fails and the pump set of the condensing plant has to be shut down, automatic exhaust valves at once permit the turbines to exhaust to atmosphere.

Fig. 4 shows one of the pump sets on our test bed.

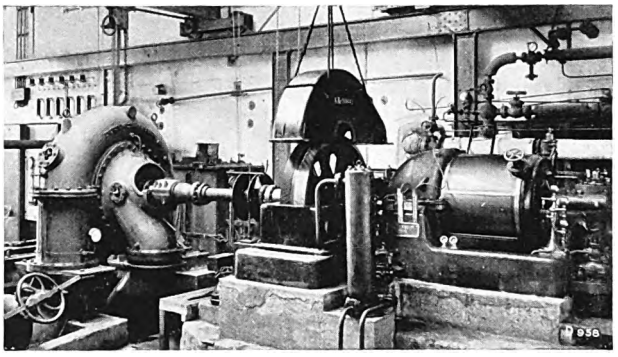

Fig. 4 Pump set on test bed.

The following table gives a survey of the test results obtained during the official taking-over tests in the central station of the Osaka Water Works.

Results of the official taking-over tests in Osaka.

Test No.	I		II		III	
Date	2. 5. 27.		2. 5. 27.		2. 5. 27.	
Speed of turbine r. p. m.	7500	7050	7500	7500	7050	7050
Pump output at 181.5 ft. head cub.ft./hr.	210 741	211000	207564	134140	195600	75930
Manometric head ft.	187.5	159.5	183.5	199	163.5	181
Steam pressure before regulating valve lbs/sq. in.	144.4	147	138.7	138.7	148	147
Steam temperature before regulating valve ° Fahr.	592	590	592	591	584	564
Cooling water temperature ° Fahr.	64.6	64.6	64	64.3	64.4	64.4
Quantity of condensate cub. ft./hr.	207	18.5	200	134	170	131
Temperature of condensate ° Fahr.	77	76	77	75	78	76
Total quantity of condensate lbs./hr.	12877	11519	12459	8364	10582	8139
Correction for pressure %	—0.65	—0.35	—1.45	—1.45	—0.3	—0.3
Correction for steam temperature %	—1.50	—1.65	—1.50	—1.50	—2.3	—4.4
Correction for cooling water temp. %	+3.15	+3.15	+3.3	+3.2	+3.2	+3.2
Corrected quantity of condensate lbs/hr.	13005	11652	12503	8385	10645	8017
Steam consumption lbs/cub. ft./hr.	0.062	0.055	0.060	0.063	0.054	0.105

Digitized by Google

The Zoelly steam turbo-locomotive.

By H. Nyffenegger.

(Conclusion.)

VII. The piston locomotive with exhaust steam turbine driving tender, Henschel-Zoelly system.

Railway Companies disposing of a large stock of the usual reciprocating locomotives exhausting to atmosphere can naturally only very slowly, i. e. in accordance with the increase of traffic and the scrapping of the existing locomotives, introduce the coal-economizing condensing locomotive with steam turbine drive, operating with absolutely pure boiler feed water. Nevertheless, it is the paramount duty of all Railway Companies to curtail the heavy expenses for coal as far as possible, though utilizing the existing stock of locomotives. Since Dr. Zoelly was occupied with his initial studies concerning pure turbo-locomotives and mixed reciprocating turbo-locomotives, Figs. 1, 2 and 3, the main difficulty of the mixed locomotive, viz. the removal of the oil from the exhaust steam of the reciprocating locomotive, has been practically solved. The firm of Henschel & Sohn in Kassel, cooperating with Dr. Zoelly and the German State Railways, therefore, again took up the problem of the reciprocating locomotive combined with exhaust steam turbine and reconstructed a passenger train locomotive, type P 8, of the German State Railways, providing a driving tender with exhaust steam turbine, Figs. 30 and 31.

When connecting an exhaust steam turbine, operating with a vacuum of 80 to 85 per cent, in series with a reciprocating locomotive, the adiabatic heat drop, compared with a locomotive exhausting to atmosphere, is increased by about 50 per cent. Taking into account the steam consumption of the auxiliary machines, practically the same saving in coal is attained as with a pure turbo-locomotive, or in other words, a correspondingly higher drawbar pull and output is developed for the same amount of coal burnt.

It may be thought advisable to reheat the steam exhausted by the reciprocating locomotive, and already freed from oil, in an intermediate superheater. However, the overflow losses, whose influence is the greater, the lower the steam pressure, are thereby increased to such an extent, that a thermal gain would not result, quite apart from the fact that the provision of the intermediate superheater would offer considerable difficulties.

The output characteristic, i. e. the curve of the corresponding speed and output values at constant steam quantity, for the piston engine is an ellipse and for the turbine a parabola. With the mixed locomotive, the piston machine's share of the output is greater than that of the turbine, therefore, the output characteristic more nearly resembles an ellipse.

If D be the quantity of steam per hour, the travelling speed at any moment, V_{nK} and V_{nT}, η_{nK} and η_{nT} the corresponding values of the most favourable speeds and internal efficiencies of the reciprocating engine and turbine, the indicated output N_i of the combined locomotive may then be calculated from the individual adiabatic heat drops H_{oK} and H_{oT} as follows:

$$N_i = \frac{D}{2542}\left\{ H_{oK} \times \eta_{nK} \sqrt{\frac{2V}{V_{nK}} - \frac{V^2}{(V_{nK})^2}} + H_{oT} \times \eta_{nT} \left(\frac{2V}{V_{nT}} - \frac{V^2}{V_{nT}^2} \right) \right\}$$

whereby for approximate calculations it suffices to operate with fixed values for V_n η_n and H_o. The indicated drawbar pull then simply is:

$$Z_i = \frac{375 \times N_i}{V}$$

As with the pure turbo-locomotive, so also with the mixed locomotive the boiler draught must be produced by a fan. Henschel, has not employed a centrifugal blower, as described for the two turbo-

Digitized by Google

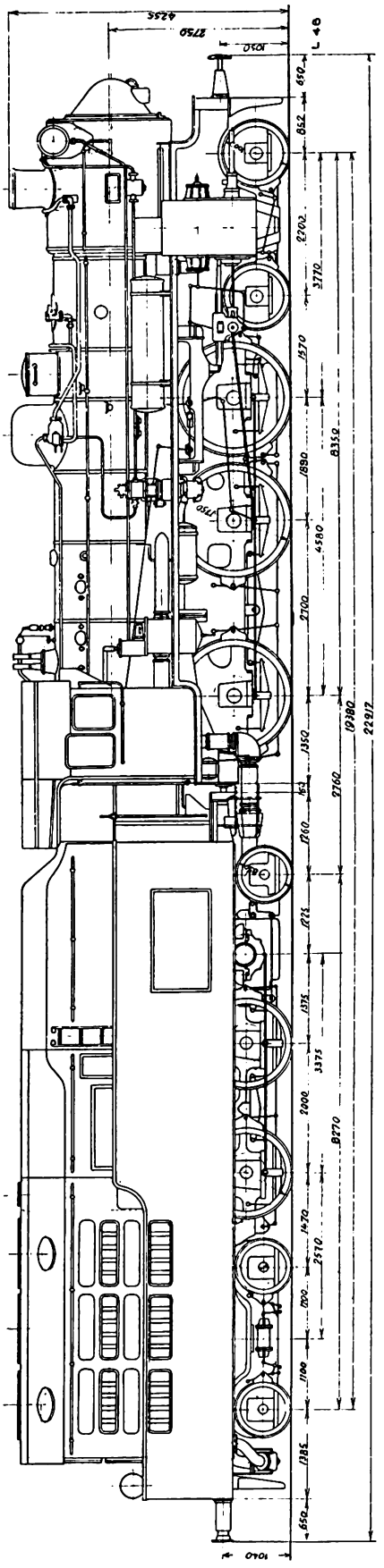

Fig. 30. Sketch of the Henschel-Zoelly driving tender locomotive.

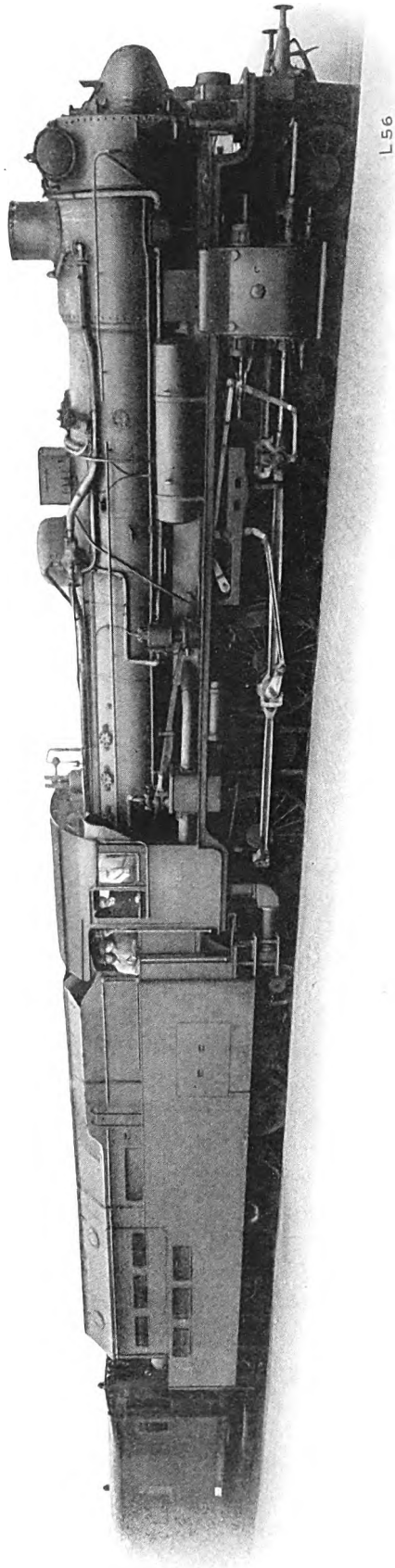

Fig. 31. View of the Henschel-Zoelly driving tender locomotive.

Digitized by Google

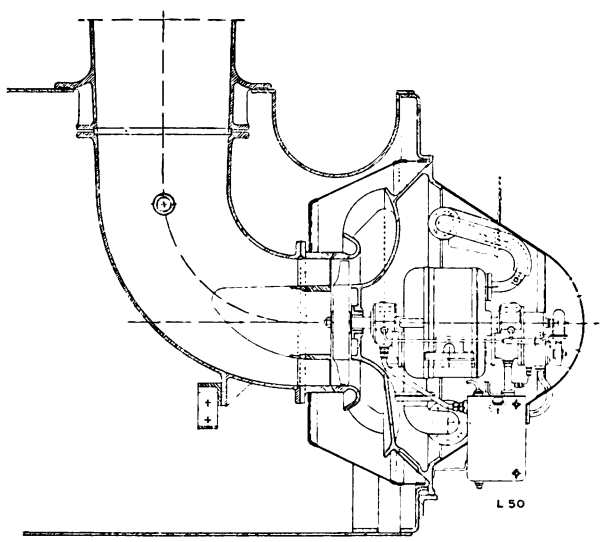

Fig. 32. Flue gas propeller.

locomotives mentioned above, but a Betz-propeller, Fig. 32, driven directly by a small steam turbine and fixed to the smoke box door. The exhaust steam of the reciprocating engine passes through two pipes situated on the level of the footboards to the oil separators and thence through articulated pipes on the tender to the turbine control gear.

The substitution of the blast pipe by a fan and the provision of the oil separators are the only noteworthy alterations made on the reciprocating engine. The tender, however, had to be entirely rebuilt, for it is now itself a driving vehicle and apart from the coal and water store, carries the exhaust steam turbine, the condenser and the other auxiliaries required for producing the vacuum. The exhaust steam turbine, Fig. 33, has three stages for ahead travel and one stage for reversing which latter is automatically closed by means of flaps in order to avoid windage losses when travelling ahead. A pressure regulator, Fig. 34, maintains a small pressure of from 1.42 to 5.68 lbs/sq. in. at all loads in the connecting pipeline between the reciprocating engine and the turbine. This prevents air entering the turbine and condenser through leakage in the flexible joint between the two vehicles, and ensures that a sufficiently high compression pressure for the steady running of the reciprocating engine is produced under all conditions by the usual Heusinger lever gear. A ring-shaped valve successively opens three groups of channels with the aid of an oil-controlled servomotor causing the pressure in the connecting pipe to rise slightly, so that the output characteristic of the exhaust steam turbine, shown in Fig. 35, results.

The reverse turbine is shut off from the ahead turbine by means of a double beat drop valve. When changing over from ahead travel to reverse travel, the control lever of the reciprocating engine simultaneously operates a reversing valve of the turbine control gear, so that when the ring-shaped valve has closed the channel groups of the ahead turbine, the double beat drop valve, gliding loosely on the piston rod, is raised from its seat against the pressure of a spring and opens a connection to the single channel group of the reverse turbine. When starting, throttled live steam may be supplied to the exhaust steam turbine by means of the fully switched-in control lever of the reciprocating engine. Safety valves located on the oil separators prevent the pressure in the connecting pipe rising too high. By means of a torsion bar embedded in the hollow shaft of the pinion, the turbine operates on the reduction gear, which is arranged inside the longitudinal frame just as with the Zoelly-Krupp locomotive.

As an articulated vacuum piping must be avoided under all circumstances, the turbine and condenser must either be arranged on the boiler vehicle as in the Zoelly locomotives of Messrs. Escher Wyss & Co. and Krupp, or on the tender as in the Henschel design, in which case the tender with its two coupled axles has sufficient dead weight to utilize the con-

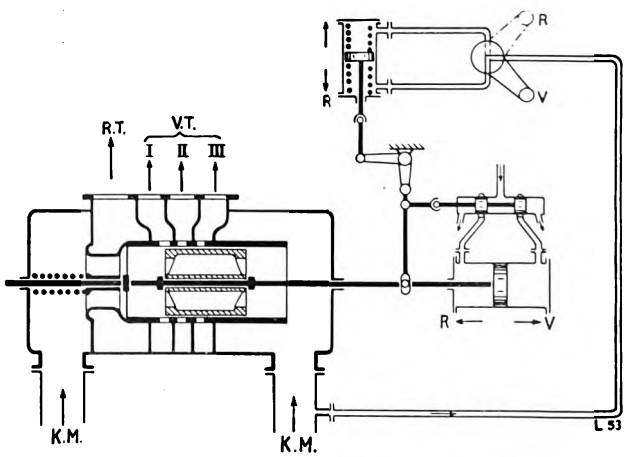

Fig. 34. Diagram of the pressure regulation and reversing gear of the exhaust steam turbine.

K. M. = Steam from reciprocating engine.
V. T. = Steam to the groups of channels I, II and III of the ahead turbine.
R. T. = Steam to reverse turbine.
V. = Position at ahead travel.
R. = Position at back travel.

Digitized by Google

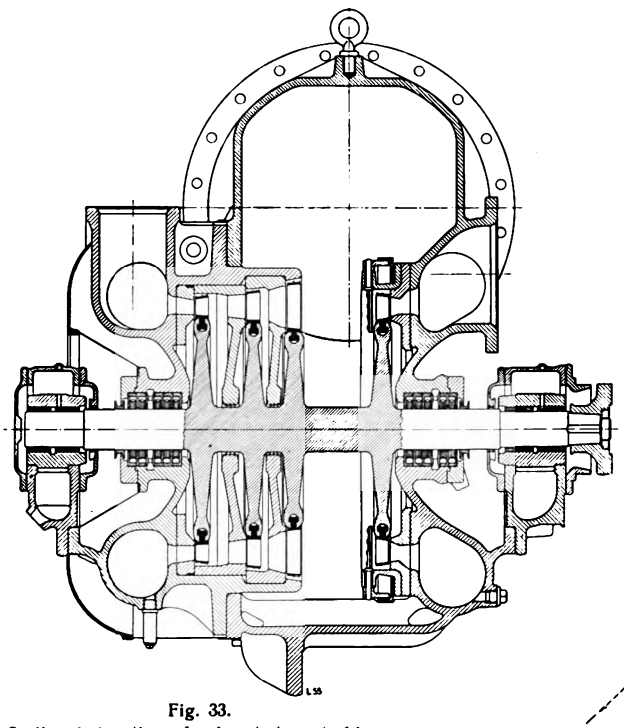

Fig. 33.
Sectional elevation of exhaust steam turbine.

siderably increased tractive force. Henschel's design of the condenser is remarkable inasmuch as it differs in many items from the designs hitherto adopted. Henschel has accepted the principle of the sprinkler cooler operating with trickling water and natural air current, long since known in various industries, and adapted it to the design of an artificially ventilated locomotive sprinkler condenser, whose vacuum chamber is formed by a bunch of tubes with adjoining steam chambers. By means of two water-sealed double partitions, the beaded parts of the tubes are protected against the ingress of air in case of leakage. As may be gathered from Fig. 36, four bunches of tubes are in parallel in regard to the flow of air. Three Betz propellers, arranged in the roof of the tender, inhale the cooling air transversely through the condenser. Tests made before constructing the tender proved that the necessary surface is not much larger than with the ordinary water-cooled surface condenser; the quantity of cooling air and the quantity of evaporated water are approximately the same as with the open sprinkler cooler of Zoelly-Krupp.

Fig. 37 shows the exhaust steam turbine with control gear arranged underneath the coal storage and easily accessible from the side. The auxiliary turbine driven by live steam is situated over the large exhaust steam pipe and serves to drive the feed water plunger pump, the three fans and the bottom pump set

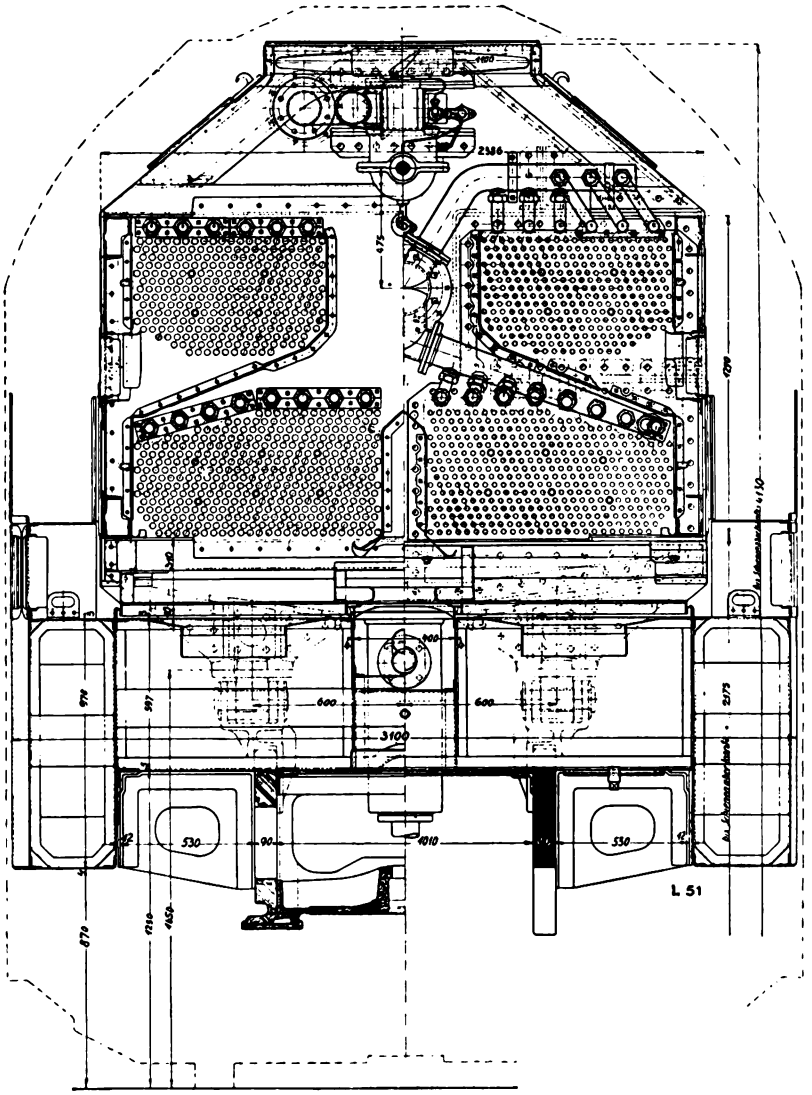

Fig. 36. Sectional elevation of Henschel's sprinkler condenser.

Digitized by Google

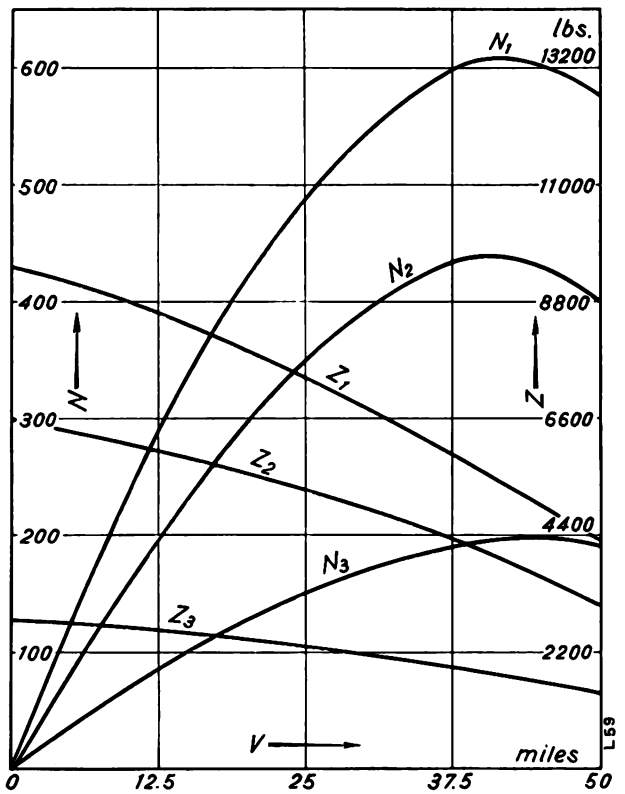

Fig. 35. Output characteristic of the exhaust steam turbine.
Tractive force Z_1 in lbs. and output N_1 in HP for 6600 lbs. of steam hourly.
" " Z_2 " " " " N_2 " " " 12100 " " " "
" " Z_3 " " " " N_3 " " " 13500 " " " "

comprising the condensate and water-circulating pumps.

As the control of the exhaust steam turbine is automatic and dependent on the control of the reciprocating engine, the locomotive, apart from the starting up of the condensing plant and the manual regulation of the furnace fan, requires no additional attendance as compared with a normal locomotive, for even the boiler feed is performed in an automatic cycle by the condensate and boiler feed pumps in a like manner as in the pure turbine locomotive.

The Henschel-Zoelly driving tender locomotive has already undertaken a number of successful trips and is at present being subjected to elaborate tests along with the Zoelly-Krupp locomotive at the testing department Grunewald of the German State Railways. The results of these tests will be published at a later date.

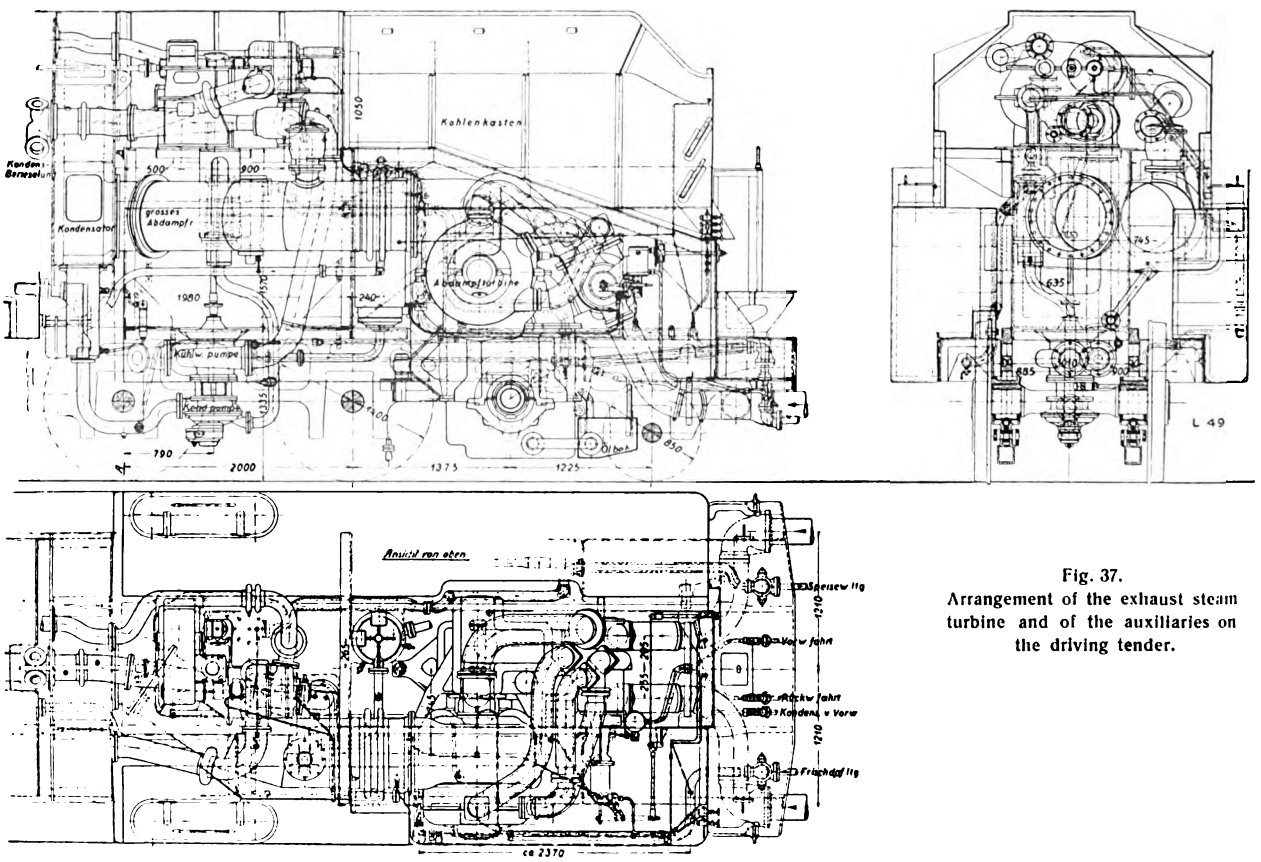

Fig. 37.
Arrangement of the exhaust steam turbine and of the auxiliaries on the driving tender.

Digitized by Google

The thickness of the walls of rectangular hollow bodies.

By R. Wiederkehr.

The tendency to introduce wherever possible higher operating pressures in power plants can nowadays be noted everywhere. Materials are being subjected to higher stresses and the question as to how they will behave under the new conditions therefore requires very careful consideration. On the other hand designers are striving to satisfy the ever-increasing requirements by utilizing the materials to the utmost by giving their designs appropriate forms, which, of course, require a good knowledge of the resulting forces, internal tensions and stresses. Hand in hand with this a continuous refinement in methods of calculation has been devised and the object of the following remarks is to show how by theoretical investigation the exact thickness of the walls of tubular, rectangular hollow bodies as used for sections of accumulators etc. may be calculated. Although as a rule these elements posses perforated walls we shall first of all deal with vessels with solid walls. Special attention will be given to the influence of a large rounding off of the corners and it will be shown what decrease in stresses is to be expected when larger radii for the corners are adopted. In the following:

M = Bending moment in cmkg.
σ_b = Bending stress of material in kg/cm².
σ_z = Tensile stress of material in kg/cm².
J = Moment of inertia of a sectional surface in cm⁴.
E = Elasticity module in kg/cm².

For those desirous of converting the metric units into equivalent English terms, we give the following co-efficients.

1 cm = 2.54 inches. 1 at = 14.2 lbs/sq. in.
10 mm = 1 cm. 1 kg = 2.2 lbs.

The dimensions shown in the illustrations are given in centimetres (cm) and a «ring segment» of the tubular vessel having a length $l = 1$ cm, Fig. 1, will be investigated. For reasons of symmetry, it will suffice to limit the investigation to a quadrant, for which, according to Fig. 2, at uniformly distributed load resulting from a constant internal pressure of p kg/cm², the following bending moments may be written:

M_1 valid for the stretch $\overline{AB}$ from $x_1 = 0$ to $x_1 = m$:

$$M_1 = M_A - \frac{p\,x_1^2}{2} \quad \ldots\ldots (1)$$

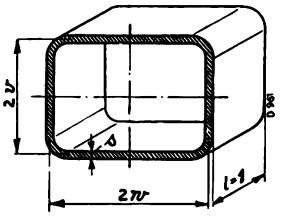

Fig. 1.

M_2 is valid for the rounding on the arc $\widehat{BC}$ for $\varphi = 0$ up to $\varphi = 90°$

$$M_2 = M_A - \frac{pm^2}{2} - p\,r\,m \sin\varphi + p\,r\,n\,(1 - \cos\varphi) \quad (2)$$

An the stretch $\overline{CD}$, M_3 is valid for $x_3 = 0$ up to $x_3 = n$

$$M_3 = M_A - \frac{pm^2}{2} - p\,r\,(m - n) + p\,n\,x_3 - \frac{p\,x_3^2}{2} \quad \ldots (3)$$

M_2, derived from Fig. 2, is

$$M_2 = M_A + p\,(n+r)\,r\,(1-\cos\varphi) - p\,m\left(\frac{m}{2} + r\sin\varphi\right) - \int_{\psi=0}^{\psi=\varphi} pr^2\,d\psi \sin(\varphi - \psi)$$

whilst M_3 is found from the consideration that

$$M_3 = M_A + p\,(n+r)\,(r + x_3) - pm\left(\frac{m}{2}+r\right) - \int_{\psi=0}^{\psi=\frac{\pi}{2}} p\,r\,d\psi\ (r\cos\psi + x_3\cos\psi) - \frac{p\,x_3^2}{2}$$

Digitized by Google

In the equations 1 to 3, the bending moment M_A in the frame section at A, where the transverse force disappears, is unknown to begin with, which is readily understood for reasons of symmetry. If the deformations of the wall are small compared with the thickness of the wall s, i. e. the frame may be accepted as restistive to bending, then M_A may be determined according to the laws of bending, when δ is the angle of inclination at a certain point of the deflected line, since for a girder:

$$d\delta = \frac{M}{J\,E}\,ds$$

and that points A und D, also for reasons of symmetry, maintain their directions, i. e. do not suffer a change of angle. When S designates the «arc» $\widehat{ABCD}$, we have:

$$\int_0^S \frac{M}{J\,E}\,ds = 0$$

Particularly for the box of uniform thickness with constant JE, which is under discussion, we have the simple equation

$$\int_0^S M\,ds = 0$$

Referring to Fig. 2,

$$0 = \int_0^m M_1\,dx_1 + \int_0^{\pi/2} M_2\,r\,d\varphi + \int_0^n M_3\,dx_3 \quad . . (4)$$

If for M_1, M_2, and M_3 we insert the values of the equations 1 to 3 and then integrate within the limits mentioned, we arrive at the following expression for the unknown tension moment M_A:

$$M_A = \frac{p\,m^2}{6} \times \frac{2 - 4\,\frac{n^3}{m^3} + 6\,\frac{n}{m} + 3\pi\,\frac{r}{m} + 12\,\frac{n}{m}\,\frac{r}{m} - 12\,\frac{n^2}{m^2}\,\frac{r}{m} + 12\,\frac{r^2}{m^2} - 6\,(\pi - 2)\,\frac{n}{m}\,\frac{r^2}{m^2}}{2 + 2\,\frac{n}{m} + \pi\,\frac{r}{m}} \quad . . . (5)$$

$$M_A = -\frac{p\,r^2}{6} \times \frac{12\,\frac{m}{r} - 6\,(\pi - 2)\,\frac{n}{r} + 3\,\pi\,\frac{m^2}{r^2} + 12\,\frac{m}{r}\,\frac{n}{r} - 12\,\frac{n^2}{r^2} + 2\,\frac{m^3}{r^3} - 4\,\frac{n^3}{r^3} + 6\,\frac{m^2}{r^2}\,\frac{n}{r}}{\pi + 2\,\frac{m}{r} + 2\,\frac{n}{r}} \quad . . (5a)$$

The latter equation is advantageously used when the radius r of the corner, which is taken up to the central lamina of the frame, becomes very large in comparison with the straight lengths m and n.

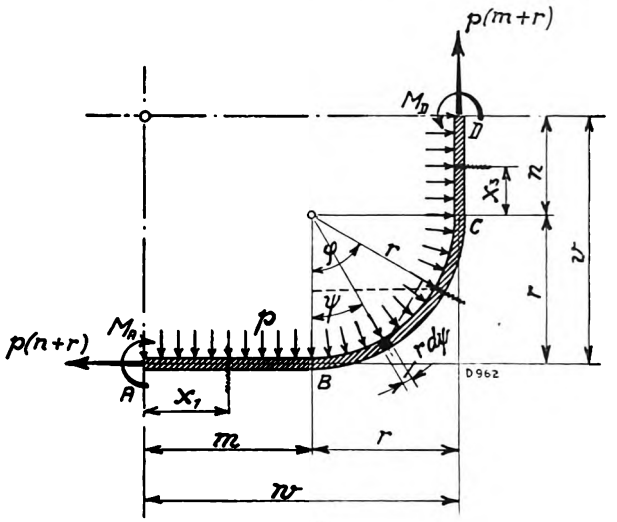

Fig. 2.

The unknown quantity is thus determined and the variation of the bending moments and tensions may be determined along the whole frame with the aid of equations 1 to 3.

I. Box without rounded corners.

If the corner of the box is not rounded off, then, choosing the coordinate system so that w is always greater than v, the moment in the middle of the larger side of the box is:

$$M_A = \frac{p\,w^2}{6}\left[1 + 2\,\frac{v}{w}\left(1 - \frac{v}{w}\right)\right] \quad . . (6)$$

M_A is a relative maximum, whilst the maximum of the bending moment is always present in the corner of the box with x = w

$$M_B = M_C = M_{max} = -\frac{p\,w^2}{6}\left[2 - 2\,\frac{v}{w}\left(1 - \frac{v}{w}\right)\right] \quad (7)$$

In the middle of the shorter side

$$M_D = \frac{p\,w^2}{6}\left[\frac{v}{w}\left(2 + \frac{v}{w}\right) - 2\right] \quad . . . (8)$$

Digitized by Google

Table 1.

$\frac{v}{w}$ =	0	0,1	0,2	0,3	0,4	0,5	0,6	0,7	0,8	0,9	1,0
η_A	1,00	1,18	1,32	1,42	1,48	1,50	1,48	1,42	1,32	1,18	1,00
$\eta_B = \eta_C$	— 2,00	— 1,82	— 1,68	— 1,58	— 1,52	— 1,50	—1,52	—1,58	—1,68	—1,82	—2,00
η_D	— 2,00	— 1,79	— 1,56	— 1,31	— 1,04	— 0,75	— 0,44	— 0,11	+ 0,24	+ 0,61	+ 1,00

If we designate the factor contained in the square brackets by η, so that for all moments of the equations 6 to 8

$$M = \frac{p\,w^2}{6}\,\eta \quad \ldots\ldots\ldots \quad (9)$$

then the values of η, dependent on the ratio $\frac{v}{w}$ of the sides of the box, acquire the values given in Table 1, all indices corresponding to the cross-sections:

$v = 0$ is identical with a uniformly loaded beam, rigidly fixed on both sides, resting on two end supports. Value $\eta_A = 1$ expresses that the moment in the middle of the beam, $M_A = \frac{p\,w^2}{6}$, may be regarded as a unit for comparing the different moments between each other.

For $\frac{v}{w} = 0.5$, the moment in the centre of the box reaches its maximum value, whilst the moment in the corner of the box attains its minimum value, so that the absolute values of both moments are equal and according to Table 1 have the value of $M = \frac{p\,w^2}{6}$ 1.5. Fig. 3 illustrates the variation of the moments along the frame.

With the square form of the box $\frac{v}{w} = 1$, the moment in the middle of the sides diminishes again to the moment of comparison $\eta = 1$. The corner moment again approaches the twofold value $\eta = -2$.

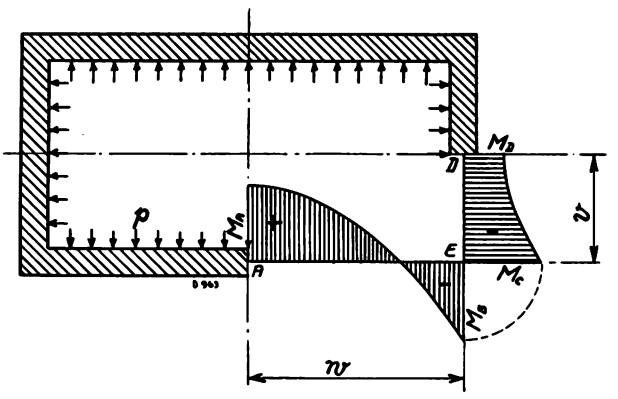

Fig. 3.

Both moments correspond to the values of the firmly fixed beam on two supports, for which $v = 0$.

II. The square box with rounded corners.

If, according to Fig. 2, n = m, the moment in the middle of the side of the square box in accordance with equation 5 is:

$$M_A = \frac{p\,m^2}{6}\left[\frac{4+3\pi\frac{r}{m}+6\,(4-\pi)\frac{r^2}{m^2}}{4+\pi\frac{r}{m}}\right] = \frac{p\,m^2}{6}\,\zeta_A \quad (10)$$

if the value in the square brachets is designated by ζ_A. A further maximum of the moment occurs

Table 2.

$\frac{r}{m}$ =	0	0,1	0,2	0,3	0,4	0,5	0,6	0,8	1,0	2,0	4,0
$\frac{r}{w}$ =	0	0,0909	0,1667	0,2308	0,2857	0,3333	0,3750	0,4444	0,5000	0,6667	0,8000
ζ_A =	1,0000	1,1576	1,3160	1,4751	1,6349	1,7951	1,9557	2,2778	2,6010	4,2255	7,4914
$\zeta_{\pi/4}$ =	— 2,0000	— 1,8424	— 1,6840	- 1,5249	— 1,3651	— 1,2049	—1,0443	—0,7222	—0,3990	—1,2255	—4,4914
η_A =	1,0000	0,957	0,914	0,873	0,834	0,798	0,764	0,703	0,650	0,469	0,300
$\eta_{\pi/4}$ =	— 2,0000	— 1,523	- 1,169	— 0,902	— 0,696	—0,535	—0,408	—0,223	—0,100	—0,136	—0,180

Digitized by Google

half way of the rounding for the angle $\varphi = \frac{\pi}{4} = 45°$ and, according to equation 2:

$$M_{\pi/4} = M_A - \frac{p\,m^2}{6}\left[3+6\,(\sqrt{2}-1)\,\frac{r}{m}\right] = \frac{p\,m^2}{6}\,\zeta_{\pi/4} \quad (11)$$

Herein $\zeta_{\pi/4}$ is the value of ζ_A diminished by the value contained in brackets of equation 11. For different ratios of $\frac{r}{m}$, these two maximum moments attain the ζ-values given in Table 2.

If the moments and also the tensions are to be compared with the former results and especially with the beam on two supports, it must not be overlooked that for the box with rounded off corners $m = w - r$ and consequently

$$m^2 = \frac{w^2}{\left(1+\frac{r}{m}\right)^2} \quad \ldots\ldots \quad (12)$$

Again writing the moments in multiples of $\frac{p\,w^2}{6}$ then in general $M = \frac{p\,w^2}{6}\eta$ and the η-values may be derived from the ζ-values on dividing by the expression $\left(1+\frac{r}{m}\right)^2$, in accordance with the decrease shown in equation 12. Table 2 also contains the η-values for different corner radii or different values of the ratios $\frac{r}{m}$, which can without difficulty be compared with the η-values of Table 1.

If the radius r is expressed in multiples of half the width of the box w, then it is evident that

$$\frac{r}{w} = \frac{r}{m+r} = \frac{\frac{r}{m}}{1+\frac{r}{m}} \quad \ldots\ldots \quad (13)$$

The corresponding values are contained in Table 2. The bending stress acting on the wall of the box is

$$\sigma_b = \frac{M}{s^2}\,6 = \frac{p\,w^2}{s^2}\,\eta \quad \ldots\ldots \quad (14)$$

and the η-values for the two frame sections in A and in the middle of the rounding of the corner $\varphi = \frac{\pi}{4}$ may be taken from the Table 2, or the diagram, Fig. 4. The total stressing of the wall of the box is composed of tension and bending and for frame sections within the plane wall is:

$$\sigma = \sigma_z \pm \sigma_b = \frac{p\,w}{s}\left[\frac{v}{w} \pm \frac{w}{s}\,\eta\right] \quad \ldots \quad (15)$$

For small corner radii r of square boxes, stressed by a constant internal pressure, the greatest tension occurs in the middle of the rounded corners on the inner surface of the box. For larger corner radii, the cross-section in the middle of the sides on the outer surface of the box is the most highly stressed.

An approximate value for the η-values of equation 14 and 15 is easily found for calculating the maximum tension in the corner for small values of $\frac{r}{w}$. As long as r is smaller than about 10 per cent of the width of the box, a very fair approximation is:

$$\eta_{\pi/4} \cong 3\,\frac{r}{w} - 2 \quad \ldots\ldots \quad (16)$$

and we see that already with a very small degree of rounding at the corners the bending tension therein diminishes very considerably.

If the form of the box does not differ very much from the circular form, the maximum bending moment in the middle of flat part, $x_1 = 0$, is:

$$M_A = \frac{p\,r^2}{6}\,\frac{m}{r}\,\frac{6\,(4-\pi)+3\,\pi\,\frac{m}{r}+4\,\frac{m^2}{r^2}}{\pi+4\,\frac{m}{r}} \quad \ldots \quad (17)$$

or approximately, when m is small compared with r

$$M_A \cong \frac{p\,r^2}{6}\,\frac{m}{r}\,\frac{6\,(4-\pi)}{\pi} \quad \ldots \quad (18)$$

and the maximum stress on the outer surface, including tension and bending, becomes:

$$\sigma = \frac{p\,w}{s}\left[1+1{,}64\,\frac{m}{s}\right] \quad \ldots\ldots \quad (19)$$

This equation proves that a tube, assumed to be circular and calculated as such, experiences very considerable additional bending stresses when slightly flattened on four sides, especially when the oblateness attains a value equivalent to the thickness of the walls of the tube. If a tube is subjected to an external pressure and the stressing rises to the elastic limit of the material owing to small deviations of the roundness, the tube will undoubtedly collapse. This shows that the stability of such a tube, whose form deviates but a little from the circular form, is diminished in a marked degree.

III. The box with two parallel sides and semicircular covers.

We will now also investigate a box of the form illustrated in Fig. 5. For this form generally $n = 0$ and the moments are:

Digitized by Google

$$M_A = \frac{p\,m^2}{6}\left[\frac{2 + 3\,\pi\,\frac{r}{m} + 12\,\frac{r^2}{m^2}}{2+\pi\,\frac{r}{m}}\right] = \frac{p\,m^2}{6}\,\zeta_A \quad . \quad . \quad (21)$$

$$M_C = M_A - \frac{p\,m^2}{6}\left(3 + 6\,\frac{r}{m}\right) \qquad = \frac{p\,m^2}{6}\,\zeta_C \quad . \quad . \quad (22)$$

For continuous values of the ratio $\frac{r}{m}$, Table 3 contains the values of ζ_A and ζ_C for calculating the moments in the middle of the plane longitudinal side and in the middle of the semicircular rounding. If, as in section II, we again introduce half the width of the box w in place of the straight stretch m, in accordance with equation 12, then in general with

$$\eta = \frac{\zeta}{\left(1+\frac{r}{m}\right)^2} \quad . \quad . \quad . \quad . \quad . \quad (23)$$

the bending stress acting on the wall of the box is:

$$\sigma_b = \frac{p\,w^2}{s^2}\,\eta \quad . \quad . \quad . \quad . \quad . \quad . \quad . \quad (24)$$

The η -values are also contained in Table 3. η_A is valid for the cross-section at A and η_C for the cross-section at C.

The diagram, Fig. 4, shows the η -values of equation 24 in dotted lines. As long as the radius r is smaller than about 48 per cent of half the width of the box, the highest bending moment is found in the middle of the curvature at the cross-section C. If the semicircle compared with the width of the box becomes larger, the maximum tension occurs in the middle of the plane wall. The tensions throughout are greater than with the square box. For small values of $\frac{m}{w}$, i. e. for large curvatures, the maximum bending moment lies in the centre of the longitudinal side:

$$M_A = \frac{pr^2}{6}\,\frac{m}{r}\,\frac{12 + 3\,\pi\,\frac{m}{r} + 2\,\frac{m^2}{r^2}}{\pi + 2\,\frac{m}{r}} \quad . \quad . \quad (25)$$

and, for very small values of $\frac{m}{r}$ the maximum total stressing is approximately:

$$\sigma \simeq \frac{pr}{s}\left[1 \pm 3.82\,\frac{m}{s}\right] \quad . \quad . \quad . \quad . \quad (26)$$

This shows still more plainly how heavily a tube can be stressed when it is flattened on two sides. Such a tube is even less capable of withstanding external pressure than the tube discussed under heading II with four flattened sides. Fig. 5 illustrates the variation of the bending moments along a frame quadrant for a ratio of $\frac{r}{m} = 1$.

With this box, which is twice as wide as it is high, we have:

$$\left.\begin{aligned} M_A &= \frac{pw^2}{6}\,1.139 \\ M_B &= \frac{pw^2}{6}\,0.389 \\ -M_C &= \frac{p\,w^2}{6}\,1.111 \end{aligned}\right\} \quad . \quad . \quad . \quad . \quad . \quad (27)$$

and in general for the curvature

$$M_2 = \frac{p\,w^2}{6}\,[0.389 - 1.5\sin\varphi]$$

IV. The rectangular box.

For this form of box, which will most frequently have to be calculated, simple equations cannot be given. The moments are, therefore, best ascertained by direct arithmetical calculation first of all by determining the moment in the middle of the side of the box according to equation 5 and then by examining the variations of the moments by the aid of equations 1 to 3.

Table 3.

$\frac{r}{m}$ =	0	0,1	0,2	0,3	0,4	0,5	0,6	0,8	1,0	2,0	4,0
$\frac{r}{w}$ =	0	0,0909	0,1667	0,2308	0,2857	0,3333	0,3750	0,4444	0,5000	0,6667	0,8000
ζ_A =	1,000	1,323	1,661	2,008	2,361	2,720	3,082	3,815	4,556	8,312	15,906
ζ_C =	— 2,000	— 2,277	— 2,539	— 2,792	— 3,039	— 3,280	— 3,518	— 3,985	— 4,444	— 6,688	—11,094
η_A =	1,000	1,094	1,153	1,188	1,205	1,209	1,204	1,178	1,139	0,923	0,636
η_C =	— 2,000	— 1,881	— 1,763	— 1,652	— 1,550	—1,458	— 1,374	— 1,228	— 1,111	— 0,743	— 0,444

Digitized by Google

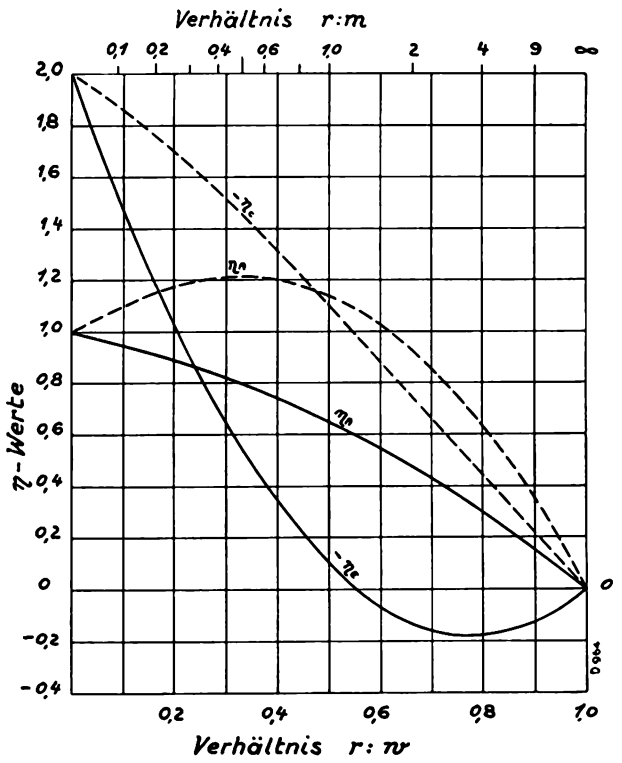

Fig. 4. Diagram of the η-values for calculating the bending tension

$$\sigma_b = \frac{p\,w^2}{s^2}\,\eta$$

— Valid for square boxes with rounded corners
- - Valid for frames with two parallel sides and semicircular covers.
Verhältnis = ratio.
Werte = values.

In general it can also be proved that a maximum bending moment occurs in the rounding of the corner,

$$\varphi = \text{arc tan}\,\frac{m}{n} \quad \ldots\ldots \quad (28)$$

which is independent of the radius at that point. With regard to the absolute value, the moment is greater here than the moment in the middle of the side, as long as the corner radius r is smaller than r = 0.9214 m, which is equivalent to r = 0.4796 w and conversely smaller when r becomes larger.

Example for a rectangular box:

For a superheater box designed for an operating pressure of p = 35 at and having an internal width of 180/130 millimetres (mm) and a wall thickness of 27 mm., the moments and stresses are to be calculated. The corner radius, measured up to the middle of the wall is r = 23.5 mm., then:

m = 8.0
n = 5.5
n:m = 0.6875
r:m = 0.29375

The bending moments are calculated by the aid of the equations: in the cross-section A according to equation 5.

$$M_A = \frac{p\,m^2}{6}\ 2.090 = 35\,\frac{8^2}{6}\,2.090 = 780 \text{ cmkg/cm}$$

Therefore, $\zeta_A = 2.090$.

For the straight length from A to B, where $\sigma < x_1 < m$, the value of the moment is generally given by

$$M_1 = \frac{p\,m^2}{6}\left(\zeta_A - 3\,\frac{x_1^2}{m^2}\right) \quad \ldots\ldots \quad (29)$$

at the point $x_1 = m\sqrt{\frac{1}{3}\zeta_A} = 8.0\sqrt{\frac{2.090}{3}} = 6.68$ cm measured from A, this moment becomes zero. For the cross-section in B we have

$$M_B = \frac{pm^2}{6}(\zeta_A - 3) = -\frac{pm^2}{6} \times 0.911 = -35\,\frac{8^2}{6}\,0.911$$

$$= -340 \text{ cmkg/cm}$$

ζ_B therefore is = −0.911.

The further variation of the moment along the curvature is given by equation 2 and for any angle φ is

$$M_2 = \frac{p\,m^2}{6}\left[\zeta_A + 6\,\frac{r}{m}\,\frac{n}{m} - 6\,\frac{r}{m}\left(\sin\varphi + \frac{n}{m}\cos\varphi\right)\right] \quad (30)$$

$$= \frac{35 \times 8^2}{6}\left[0.3012 - 1.7625\,(\sin\varphi + 0.6875\cos\varphi)\right]$$

The maximum occurs, according to equation 28. when $\varphi = \text{arc tan}\,\frac{m}{n} = \text{arc tan}\,1.4546 = 0.969 \simeq 55\frac{1}{2}^0$ and then attains the value of:

$$M_{2\,max} = -\frac{pm^2}{6}\,1.838 = -35\,\frac{8^2}{6}\,1.838 = -690 \text{ cmkg/cm}$$

in the cross-section C

$$M_C = -\frac{pm^2}{6}\,1.4613 = -35\,\frac{8^2}{6}\,1.4613 = -545 \text{ cmkg/cm}$$

in the straight length from C to D where $0 < x_3 < n$, the moment in general is:

$$M_3 = \frac{p\,m^2}{6}\left[\zeta_c + 6\,\frac{n}{m}\,\frac{x_3}{m} - 3\,\frac{x_3^2}{m^2}\right] \quad \ldots \quad (31)$$

$$= -\frac{p\,m^2}{6}\left[1.461 - 4.125\,\frac{x_3}{m} + 3\,\frac{x_3^2}{m^2}\right]$$

The moment M^3 attains its highest value in point C, where $x_3 = 0$, whilst for $x_3 = n$, the middle of the side, i. e. for the cross-section at D

Digitized by Google

$$M_D = -\frac{pm^2}{6} 0.0434 = -35 \frac{8^2}{6} 0.0434 = -16 \text{ cmkg/cm}$$

The moments along the frame are graphically shown in Fig. 6 for one quadrant. In addition, the value of the moments is drawn as a dotted line for the case in which the corner radius r is not taken into account. When r = 0 we obtain the moments:

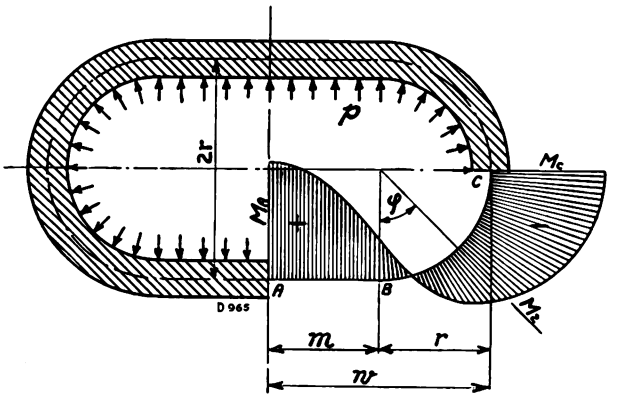

Fig. 5.

$$M_A = \frac{pw^2}{6}\left[1 + 2\frac{v}{w}\left(1 - \frac{v}{w}\right)\right] = 35\frac{10.35^2}{6} 1.366 = 855 \text{ cmkg/cm}$$

$$M_E = \frac{pw^2}{6}\left[2 - 2\frac{v}{w}\left(1 - \frac{v}{w}\right)\right] = 35\frac{10.35^2}{6} 1.634 = 1020 \text{ "}$$

$$M_D = \frac{pw^2}{6}\left[\frac{v}{w}\left(2 + \frac{v}{w}\right) - 2\right] = 35\frac{10.35^2}{6} 0.092 = 58 \text{ "}$$

By comparison we find that the moment M_E in the corner of the box is considerably reduced by the rounding off, whilst the influence on the middle of the box sides is smaller, though tangible, and diminishes the value of the moment in the most stressed cross-section in A.

The moment of resistance of the wall cross-section is:

$$W = \frac{s^2}{6} = \frac{2.7^2}{6} = 1.215 \text{ cm}^3$$

The most stressed cross-section at A in the middle of the longer side of the box thus experiences a maximum stress of:

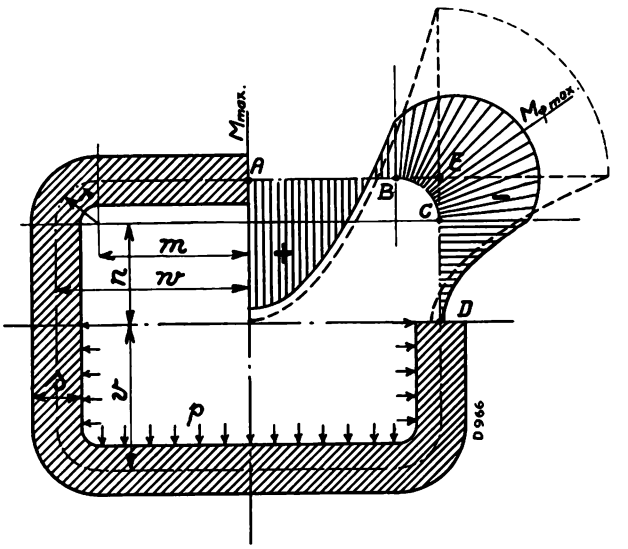

Fig. 6.

$$\sigma_A = \sigma_z \pm \sigma_b = 100 \pm \frac{780}{1.215} = 100 \pm 640$$

$= 740$ kg/cm² tension on the outer surface of the box,

$= 540$ kg/cm² compression on the inner of the box,

for the tensile stress is

$$\sigma_z = \frac{p(n+r)}{s} = \frac{35(5.5+2.35)}{2.7} = 100 \text{ kg/cm}^2.$$

The above equations thus permit the values of the bending moments for rectangular box sections being calculated and the determination of the reduction in the stresses when the corners of the boxes are rounded to any desired extent.

Digitized by Google

Modern marine turbines of small outputs.

By *H. Quiby.*

In Number 5/1928 of our «Escher Wyss News», the turbine plant of the twin-screw steamer «Nieuw Zeeland», consisting of two turbine sets of 4000 shaft HP each, was described. Each turbine drives a propeller through a single speed reducing gear. This plant is a typical example of our work, for which a single gear, a minimum number of turbine casings and an excellent efficiency are simultaneously required provided that the latter shall not be lower than that of a three-casing reaction turbine of the same output.

The output of this plant was already so large that the condition regarding the single toothed wheel gear, i. e. the necessity of reducing the speed, offered no serious difficulties for dimensioning the blades. Indeed, the quantity of steam available permitted full admission after the fourth pressure stage with blades of reasonable length. However, the difficulties increase rapidly when small outputs enter the question. As the volume flowing through the turbine becomes smaller, the steam velocities, do not diminish correspondingly, and the sectional areas of the passages become smaller. It follows that the dimensions of the steam passages are much too small compared with those of the wheels, shafts, stuffing boxes and all other factors determining the losses outside the blading. These losses are the wheel frictions supplemented by increased windage owing to smaller admission, the losses due to leakage from stage to stage and through the glands. Finally there are the bearing friction and radiation losses.

It follows that the next means to improve the efficiency of a turbine of small output, or rather, of small steam volume, would be to reduce its dimensions. At the same time it is necessary to take account of the influence, which the ration $\frac{u}{c_o}$, i. e. the ratio of the peripheral velocity to the steam velocity, exercises on the stage efficiency.

If we study not only one stage, but a complete turbine, then the influence of $\frac{u}{c_o}$ is reflected in the expression $\Sigma \frac{u^2}{H}$, which is called the quality index or Parsons coefficient. If only that part of the blading, which lies in the path of the steam is considered, it is known that the efficiency increases with the Parsons coefficient. It follows that this coefficient may be of great importance to the manufacture of a high efficiency turbine if the output is so large that the losses outside the blading almost disappear. Hence the Parsons coefficient necessitates that for a certain heat drop either a large number of stages with small peripheral velocity, or a small number of stages with high peripheral velocity must be employed.

The special conditions of marine turbine construction are that a marine turbine shall run at all speeds and that it is usually necessary to provide a number of astern stages on the shaft of the ahead turbine. We see that these conditions are contradictory and clash with the above-mentioned conditions of best efficiency.

The conditions forced upon the designer for the construction of a turbine of moderate capacity, i. e. of less than about 4000 HP are as follows:

1. Small diameter in order to reduce wheel friction and economize space. This leads to adopting a large number of stages.
2. Largest possible steam passages, as the efficiency increases with the dimensions of the guide and runner wheels and with the admission. This necessitates a very extensive subdivision of the total heat drop in order to reduce the steam velocity, and, thereby a large number of stages are required.
3. The leakage losses from stage to stage through the diaphragm labyrinths must be kept low as a result of adopting numerous stages, which on the other hand conflicts with the requirement of a thick shaft.

Digitized by Google

4. To reduce the gland losses, which necessitates either long stuffing boxes or a small shaft diameter. Again two contradictory requirements.
5. Rigid, i. e. short, shaft in order to avoid the latter becoming too thick at the points where it passes through the diaphragms and glands.
6. Provision of an astern turbine in at least one of the casings of the ahead turbine.
7. The necessity of manœuvring. This causes sudden fluctuations of the temperature in the main parts of the turbine and change of direction of the forces and this in turn leads to small dimensions and to large clearances between the movable and fixed parts.

We see that nearly all of the above-mentioned conditions for the attainment of a good efficiency are incompatible with the necessity of a rigid shaft.

In general, a certain length is available for the utilization of a given heat drop. This length approximately determines the shaft diameter when the speed is fixed, which latter mostly depends on the stressing of the toothed wheel gear. If it is a question of a disc turbine, in which the stages are separated from each other by means of diaphragms, the number of stages are thereby limited as the guide wheels, or diaphragms, must have a certain minimum thickness. This latter depends on the manner in which the guide blades are fixed in the diaphragm and on the difference of pressure between both sides. The larger the diameter, the greater the axial length required for a guide wheel, and the smaller the number of stages that can be provided in the given space. If we study turbines of equal capacity, equal efficiency and operating with the same heat drop, we must not overlook that the peripheral velocity varies only inversely as the square root of the number of stages, i. e. that on a given length of shaft and for a given drop we cannot provide an unlimited number of stages. If we wish to increase the number of stages by reducing the diameter, then the shaft diameter must be enlarged at the same time.

This, by the way, would have the favourable effect of reducing the surface and thickness of the diaphragms. However, it must once more be emphasized that simple constructional conditions governing the fixing of the guide blades in the diaphragm forbid reducing the axial length of a stage ad libitum.

This restriction no longer exists as soon as the limit is reached where the shaft diameter has become so large that the diaphragms disappear and only blade rims remain as guide wheels, which are provided with a shrouding on the top of the blades. At this moment conditions improve suddenly and now many more stages can be provided within a certain length. It follows that:

1. In most cases the leakage losses from stage to stage are equal to or even smaller than those existing when discs and diaphragms are used because the heat drop is much further subdivided. It is naturally assumed that the clearances were not taken smaller.
2. Wheel friction is avoided; this is an item, which considerably influences the heat balance of a small capacity turbine.
3. Thanks to the large number of stages, the steam velocities are so small that the steam passage areas increase sufficiently to allow full admission with adequately large blades. The windage losses, therefore, disappear and a good utilization of the outlet energy of each stage in the following stage is possible.
4. The efficiency of the blading is excellent because there is a greater margin for the choice of the velocity conditions. Apart from this, the efficiency also improves because the guide blades may be manufactured exactly like the runner blades and may also be polished on all sides. At the same time, the friction path in the guide cells is shortened.

The above considerations lead to adopting a drum rotor, which is subjected to an axial thrust because the pressure on its front surface is greater than that on its rear surface.

As will be seen, the drum construction for impulse turbines is only warranted for small steam quantities, but just in such cases the gland losses play an important part. The smaller the drop utilized in the first stage, the higher the pressure before the gland and the greater the leakage losses. At the same time the axial thrust on the front surface of the drum increases. Certainly, the axial thrust may be compensated by means of a labyrinth piston fixed before the gland. This, however, leads to an increase of the leakage losses and simultaneously the reliability is jeopardised by the introduction of a rotating member with small play. All these designs strive to let the first stage before the drum operate with a relatively high drop, for instance, by means of a two-row velocity wheel. The effi-

Digitized by Google

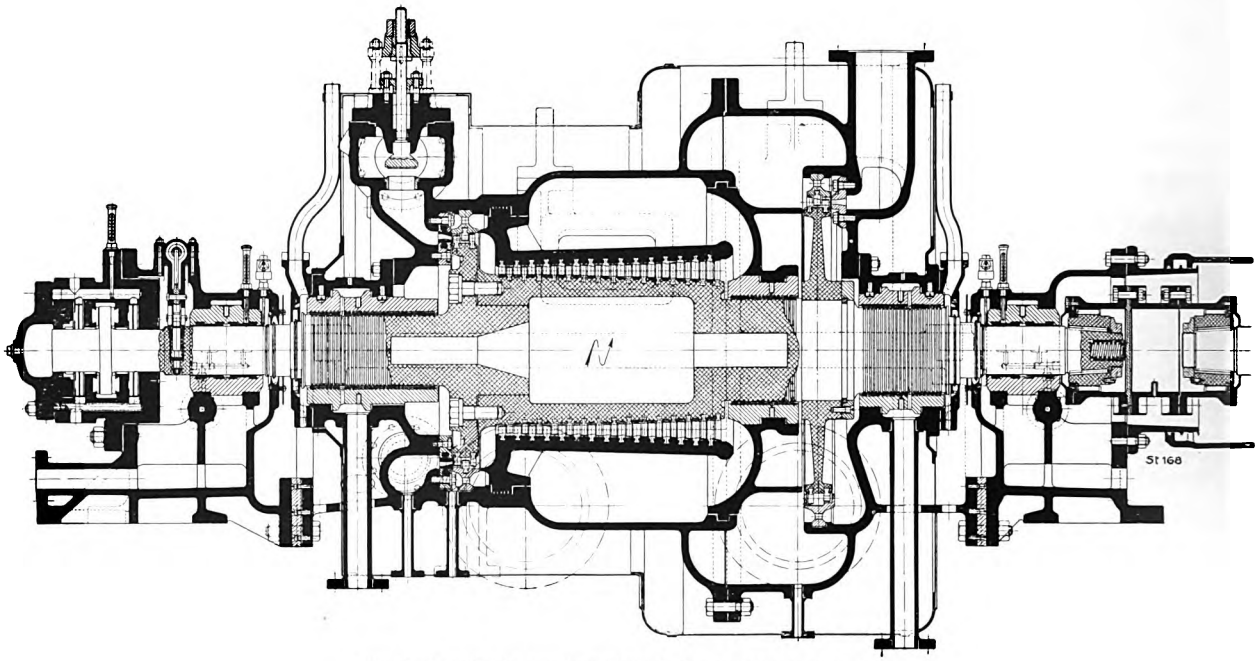

Fig. 1. Longitudinal section through the high-pressure turbine.

ciency of this stage will necessarily be low as its diameter is too small to secure a favourable $\frac{u}{c_0}$ ratio and yet so large that the losses due to steam friction and windage are very considerable. These supplementary losses are, however, compensated inasmuch as the gland leakage becomes smaller, no labyrinth piston is required and the frictional loss in the thrust bearing is also reduced. The heat drop diminished by that of the first stage may then be subdivided in the drum stages to such an extent that their efficiencies may thereby be favourably influenced.

If the turbine is subdivided into a high-pressure and a low-pressure casing, as is mostly the case with marine turbines, then, even for moderate outputs, the steam volumes in the low-pressure part are such that the introduction of drum blading no longer offers any advantage. On the contrary, the small steam velocities of the drum design require too large steam passages for the last stages, so that the blades become excessively long. The low-pressure turbines are, therefore, mostly equipped with discs and diaphragms.

Accepting the above views and carefully considering the unavoidable compromise between space requirements, reliability in service and efficiency, Messrs. Escher Wyss & Co. arrived at the new design of turbines for mercantile steamers. As illustrative example we will describe the turbines, which we built for the steamships «Maaskerk» and «Amstelkerk» of the Koninglijke Nederlandsche Stoomboot My in Amsterdam. The rated output of each turbine group measured at the propeller shaft is 2600 shaft HP. At this output the high-pressure and low-pressure turbine has a speed of 3810 r. p. m. The turbines can develop an output of 3000 SHP at 4000 r. p. m.

Each turbine drives the pinion of a double reduction gear supplied by the Power Plant Co., West Drayton (England).

Fig. 1 is a longitudinal section through the high-pressure turbine. The first ahead stage with the two rows of runner blades on the velocity wheel, and the drum with its impulse blading are plainly visible. The high-pressure stage of the astern turbine, consisting of but one two-stage velocity wheel, is separated from the ahead portion by means of a diaphragm.

The pressure in the valve chest before the first guide wheel is 206 lbs/sq. in. and the temperature 572° Fahr. The guide passages of the first guide wheel are subdivided into unequal groups, of which the larger group in the lower part of the casing always remains open, i. e. is connected with the

Digitized by Google

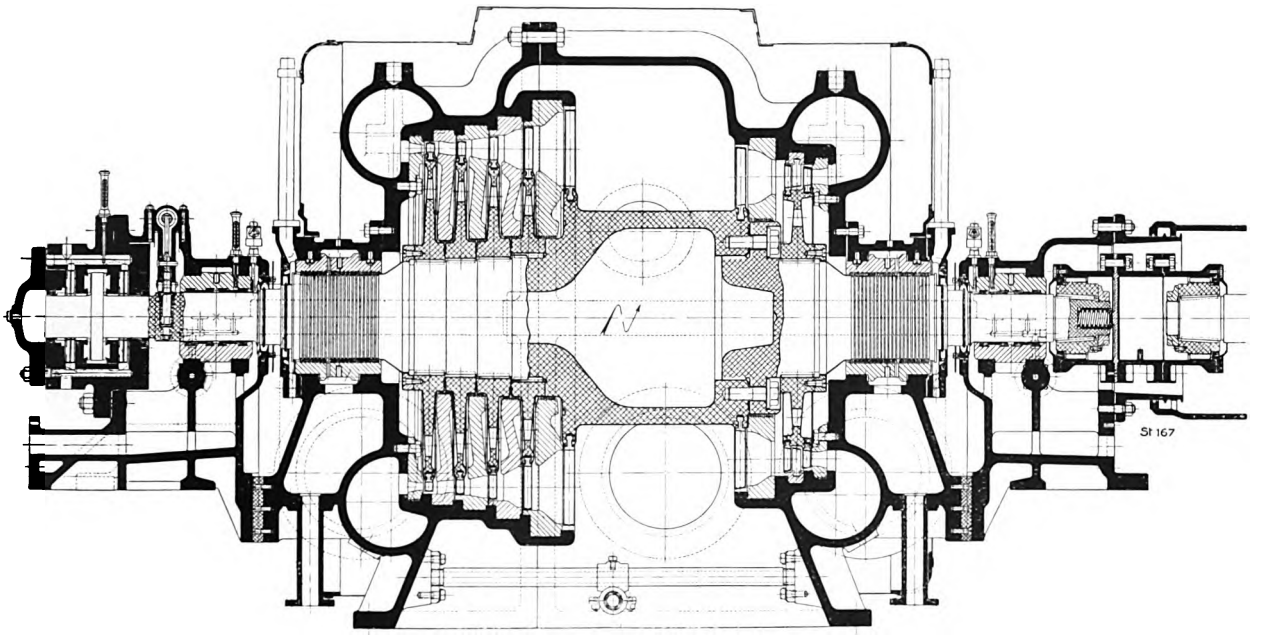

Fig. 2. Longitudinal section through the low-pressure turbine.

live steam pipeline. Four other groups of nozzles on the upper part of the casing can each be closed through a valve, as shown in Fig. 3. This subdivision permits the utilisation of the total heat drop also at partial loads, though naturally with a variable efficiency. At partial load the drop of the first stage becomes larger and simultaneously the peripheral velocities smaller, which unfavourably influences the speed ratios $\frac{u}{c_o}$. The rotor consists of two parts sufficiently shrunk on to each other to exclude loosening even when starting quickly, although the outer part may be much warmer than the inner part. In addition to this, both halves are firmly screwed together by means of strong bolts. The wheel of the first pressure stage of the astern turbine is not shrunk on to the shaft, but fixed with four keys. Even at maximum speed and at large differences of temperature between the wheel and shaft exact coaxiality is maintained.

The guide blades of the drum are inserted in the grooves of a cast-steel cylinder fixed in the casing. The casing itself is also made of cast-steel.

The glands are exclusively provided with labyrinths. The throttling points are produced by means of brass strips fixed in pairs in the grooves of the wrought-iron glands, where they are retained by a soft iron ring. The horizontally divided gland is inserted in a ring-shaped space of the casing serving as discharge chamber for the leakage steam.

The bearings are of the normal marine turbine type, i. e. each bearing is divided into two short bushes, the tests undertaken by us having proved beyond doubt that short bearings, allowing ample circulation of oil, occasion the least friction and are, therefore, most reliable in service.

As is customary with marine turbines, the two ends of the casing are supported by the bearing pedestals. One of the latter is rigidly fixed to a bracket of the gear casing, whilst the other is free on expansions of the casing by heating to glide forwards on the bedplate between two guides. The front bearing pedestal contains the thrust bearing, so that relative movements of the casing and rotor are reduced to a minimum. To ensure a minimum play for the guide strips, the latter are fixed on both sides of a narrow projection of the bearing body cast-on in front.

Fig. 2 illustrates the low-pressure turbine. The ahead part of this turbine consists of five normal impulse stages of one runner wheel and one guide wheel each. With the exception of the last wheel, which is only a collar of the thickened drum-shaped shaft, each wheel is fixed to the shaft with 4 keys. The low-pressure astern turbine consists of a two-

Digitized by Google

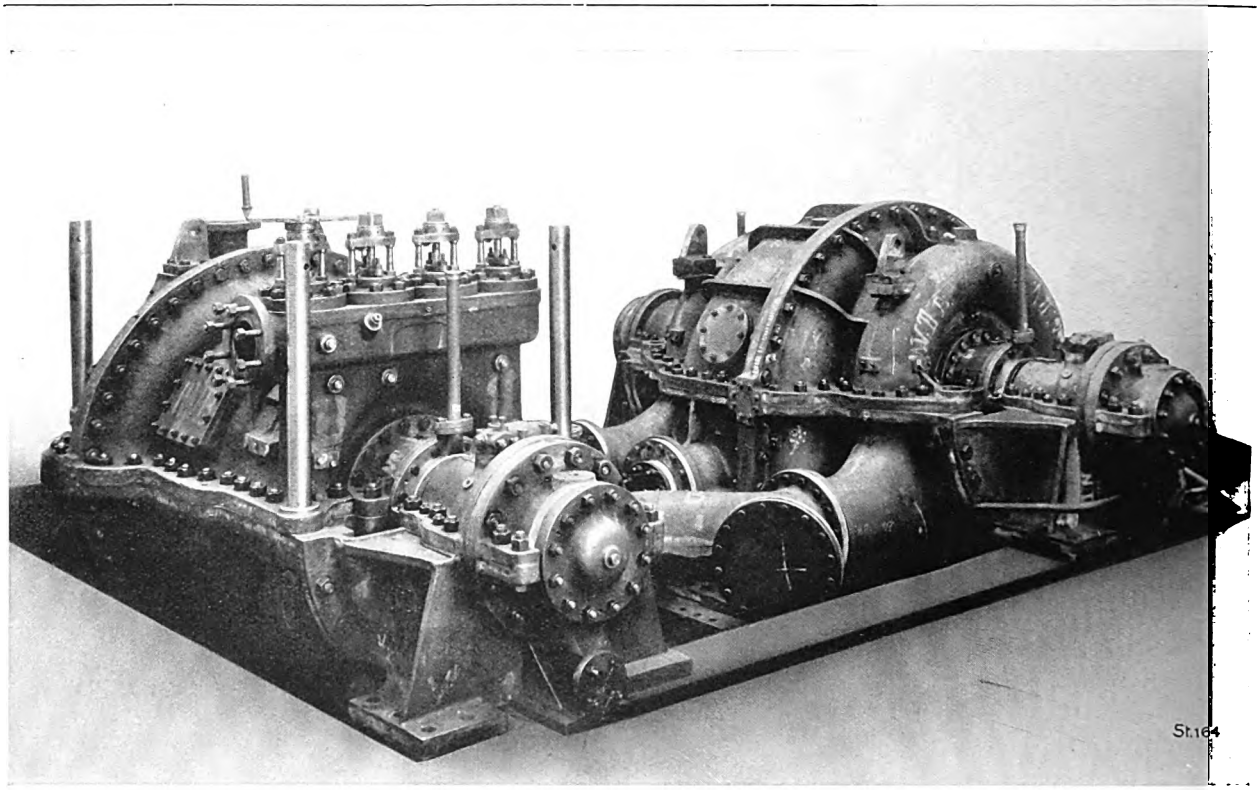

Fig. 3 Marine turbines of modern design in our workshops.

row velocity wheel and a normal single impulse wheel. The latter is also turned in the rotor itself. The shaft has the form of a two-part drum for the sole purpose of increasing its rigidity and of removing the critical speed well beyond the limits of the operating speeds.

The guide wheels are of normal design with cast-in vanes.

The other parts, such as glands and bearings, are of identical design to those of the high-pressure turbine. As usual, the connecting pipes between the high-pressure and low-pressure turbine fore and aft are so designed that by simple reversal, they permit one turbine alone being maintained in service, should the other have to be shut down owing to a breakdown. The latter turbine is in that case disconnected, which may be performed without difficulty by our design o. the axially movable clutch.

Fig. 3 shows these turbines in our erection shops. The front bearing housing with the Michell thrust bearing are visible in the foreground. Fig. 4 illustrates the same turbines with the upper part of the casing removed.

If the live steam pressure equals from 15 to 285 lbs/sq. in., the design described above offers considerable advantages for outputs not exceeding 4000 shaft HP. At higher initial pressures, as called for nowadays by the necessity of better heat economy, the output limit alters in such a manner that the volumes are of the same order.

In turbine plants for special purposes it may happen that the ideas suggested at the beginning of this article no longer hold, as the conditions under which the turbines have to operate vary to such an extent that when calculating the blading one can no longer reckon on a fixed relation between the speed and output. That is the case for instance with turbines for river tugs. Paddle wheel tugs are employed especially for towing on rapidly flowing, irregular rivers. Messrs. Escher Wyss & Co. in 1921 built the first turbine plant for the paddle wheel tug «Zurich» owned by the Schweizerische Schleppschiffahrt-Gesellschaft in Basle. This was a somewhat risky undertaking, inasmuch as the steamer «Zurich» was destined to travel at low water on the difficult stretch of the Rhine lying between Basle and Strassbourg. After unexpected conditions of operation had enforced a change of the gear ratio between the turbine and paddle wheels and necessitated an increase of the turbine output.

Digitized by Google

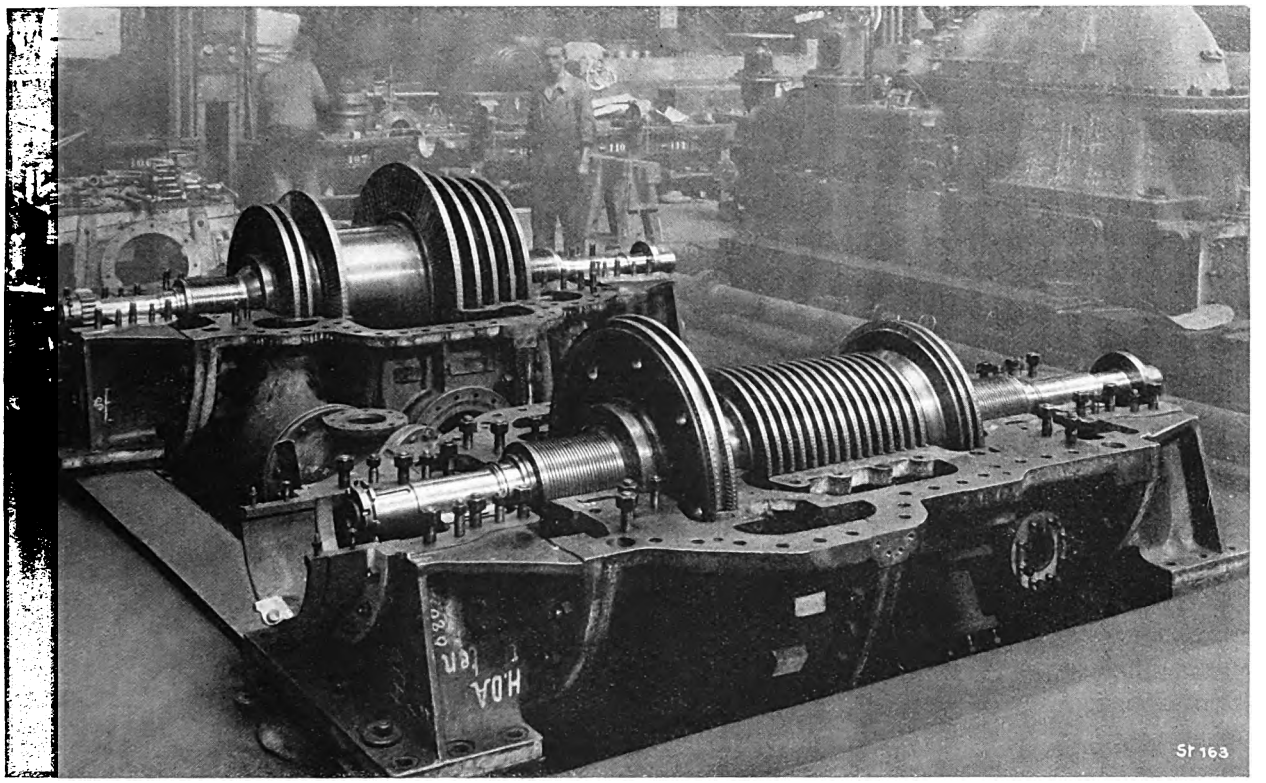

Fig. 4. Marine turbines of modern design in our assembly shops, with upper part of casing removed.

this plant has since been operating permanently and done excellent service. Messrs. Escher Wyss & Co. have gained very valuable experience with this first turbine-driven tug, which enables them to confidentially solve similar problems.

An opportunity presents itself just now. Our firm has received an order from the Sté Générale de Navigation de Lyon for the manufacture of a turbine plant for a paddle wheel tug plying on the Rhône below Lyons.

This plant, like that of the steam tug «Zurich», consists of a high-pressure and a low-pressure turbine, each of which drive a pinion of the double reduction gearing.

At the normal output of 1050 SHP, the wheels have a speed of about 35 r. p. m., whilst the high-pressure turbine runs at 5800 r. p. m. and the low-pressure turbine at 4500 r. p. m.

When working out the details of the plant, the greatest difficulty was caused by the stipulation that a maximum output of 1500 SHP was to be produced at the high paddle speed of 45 r. p. m. The speed increase referred to the increased output is much greater than with a normal marine turbine for screw propeller drive. Apart from this, widely varying outputs may be called for at different speeds. These conditions enforce a runner wheel blading with such angles that a minimum of impact losses results at highly fluctuating speed and output conditions. This implies that the steam consumption guarantees must be calculated with an ample safety coefficient as it is unknown whether the conditions for maximum efficiency of the turbine are ever likely to prevail and above all whether they are likely to be of a lasting nature.

These unfavourable conditions require a design aiming at utmost simplicity and reliability in service, whilst the blading is dimensioned for a satisfactory efficiency for very different speed ratios $\frac{u}{c_0}$. Figs. 5 and 6 illustrate longitudinal sections of the high-pressure and low-pressure turbines.

The output is transmitted from the hollow shaft of the gear wheel of the reduction gear to the continuous paddle shaft by means of a flexible coupling, which at the same time is designed as hydraulic torque measuring device. This apparatus, manufactured by the firm of A. Amsler in Schaff-

Digitized by Google

hausen, will permit very accurate measurements being made of the output.

This measuring apparatus might even be employed for automatically regulating the torque, in-

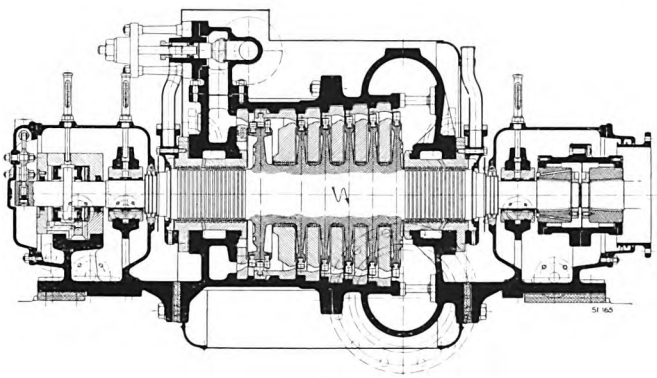

Fig. 5.

asmuch as the indicator piston of the device could influence the control gear of the servomotor of a steam admission valve, for instance a throttle valve. A simple mechanism, similar to the speed adjusting mechanism of normal speed regulating devices would then permit the torque being adjusted as desired. From the standpoint of the engine driver the turbine would then be handled exactly like a reciprocating engine, as the torque regulating mechanism would have precisely the same effect as the cut-off of a steam engine.

By means of such a device the difference between turbine and reciprocating engine drive could be eliminated, which at the beginning often gave rise to trouble, as it was not obvious wherein the difference consisted and which kind of drive it necessitated.

This fundamental difference is founded in the fact that the reciprocating engine at constant admission develops a constant torque, i. e. an output proportional to the speed. If the position of the admission parts of the turbine remains unaltered, a torque is produced, which decreases linearly as the speed rises from zero to a maximum, at which the output becomes zero.

Two tugs, one of which is driven by a reciprocating engine and the other by a steam turbine, and which haul identical loads over the same stretch of a river, will have the same mean speeds but will evince very different fluctuations of the engine outputs and speeds according to the momentary travelling resistances.

In a following article, the relative peculiarities of both types of machines employed for the above purpose will be investigated in order to ascertain the most suitable kind of drive.

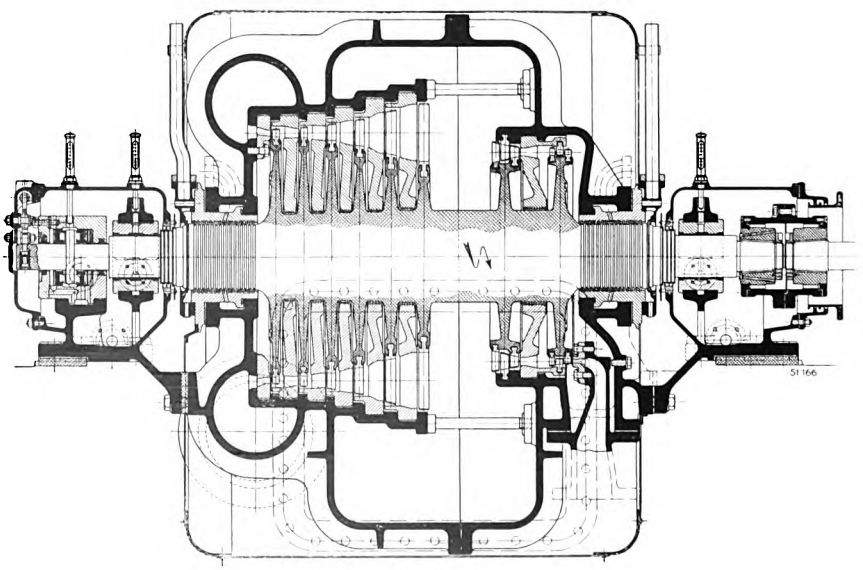

Fig. 6.

Digitized by Google

Comparison between a steam turbine and a reciprocating engine as prime mover for paddle wheel tugs.

By H. Quiby.

The provision of a suitable steam turbine in place of a reciprocating engine at first sight appears to be an extremely simple matter, which may be reviewed in the following manner. Assuming the boat in question to be driven by an engine of normal output according to our present day experience, a steam turbine is to be constructed, which shall be capable of developing the same output as the reciprocating engine at the same propeller speed.

The problem might be deemed almost correct if it were a question of a vessel, which almost always travelled with the same speed relatively to the water. In that case it would suffice to replace the reciprocating engine by a steam turbine, which at normal propeller speed would develop its normal output, i. e. would have its maximum efficiency at this speed.

In reality, however, the question of the efficiency presents considerable difficulties in the solution of the problem.

To begin with, it is necessary to be well informed on the special service conditions of a tug boat. The latter differs from a normal steamer inasmuch as the travelling resistance varies within very wide limits according to the number of barges to be towed. This resistance is composed of the resistance of the tug itself and the resistance of the towed barges, which in general exceeds the former by a multiple.

The extreme limits are fixed by a stationary test on the one hand and by a free trip without barges on the other. Under such conditions the speed of the steamer varies from zero to a maximum relatively to the water assuming that the engine output remains constant.

In calm water the conditions are simple. The resistances of the towed and towing boats in sufficiently deep water and for known draughts and profile simply depend on the travelling speed. The latter in turn has a definite relation to the engine output.

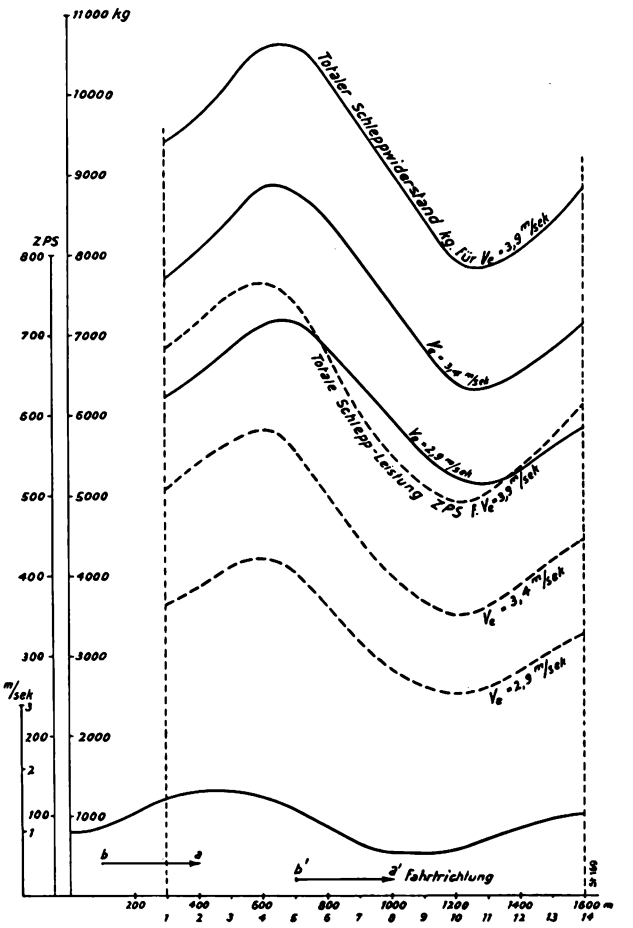

Fig. 1. ZPS =
Totaler Schleppwiderstand kg für Ve = 3.9 m/Sek. =
Total towing resistance kilos for Ve = 3.9 metres/second;
Totale Schleppleistung = Total towing output;
Fahrtrichtung = Direction of travel.

Digitized by Google

The towing of boats, especially on fast non-regulated rivers such as the Upper Rhine, is subject to far more complicated conditions. It must be remembered that the water velocity with respect to the river bed can fluctuate very considerably on

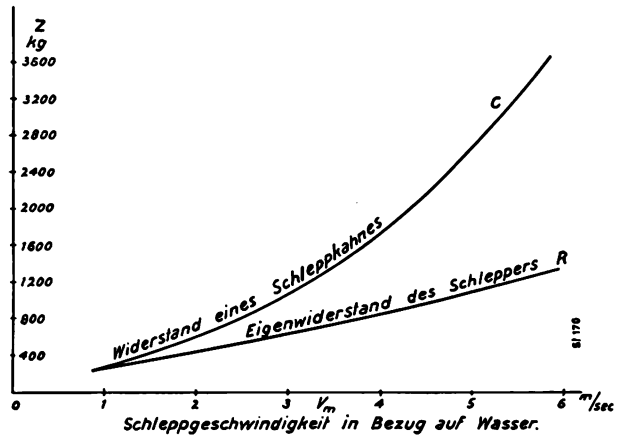

Fig. 2

Widerstand eines Schleppkahnes = Resistance of a barge.
Eigenwiderstand des Schleppers = Resistance of tug.
Schleppgeschwindigkeit in Bezug auf Wasser = Towing speed relatively to water.

stretches, whose length is comparable with the length of the train of ships towed. It often happens that the tug is in slowly flowing water, whilst the barges are travelling in a rapid turbulent current. The following moment these conditions may be reversed.

In the following we will investigate to what variations of the towing speed (speed of tug relatively to the water) the tug may be subjected and what effects these fluctuations have on the engine output and the efficiency.

Let us assume a stretch, whose length may be taken as abscissae from Fig. 1. The water velocities in this section of the river are plotted as ordinates. On this stretch a train consisting of the tug and three similar barges travels. For the sake of simplicity we will assume that the tug and one barge on the one hand and the two other barges on the other travel in water having the same velocity. The first group is designated by «a», the second by «b».

In the position a—b, the train has a speed of 3.4 metres/sec. relatively to the shore. The tug is at a point where the water velocity equals 1.64 metres/sec. Consequently the towing speed on the water is 3.4 + 1.64 = 5.04 metres/sec. At the same instant the barges relatively to the water are travelling with a speed of 1.06 + 3.4 = 4.46 metres/sec. In the position a′—b′, however, the tug has a relative speed of 0.66 + 3.4 = 4.06 metres/sec. and that of the barges 1.06 + 3.4 = 4.46 metres/sec. The engine outputs corresponding to the different positions of the train at the speeds assumed in Fig. 1 are now determined.

Fig. 2 represents the travelling speed curves of a tug and one barge *) and we will assume that they represent those of the vessels under consideration.

The resistances of the tug and one barge corresponding to the momentary speed of a are determined from Fig. 2 for different positions of the train along the stretch under consideration. To these are added the resistances of two tugs for the speed at b, and we then have the total travelling resistance of the train in the given position. When this calculation has been performed for a sufficient number of points, a curve of the towing resistances along the whole stretch may be plotted for the assumed constant shore velocity. This has been done for three different speeds relatively to the shore, viz: 2.9, 3.4 and 3.9 metres/sec. and the resulting curves are shown in Fig. 1 as full lines.

The towing output, i. e. the output effectively developed by the propeller is equal to the total resistance of the train multiplied by the speed of the propeller shaft relatively to the water. We know both values and consequently the towing output for each point of the stretch can be plotted as ordinate, and for each of the assumed speeds relatively to the shore we obtain a further curve shown in Fig. 1 as a dotted line.

The drive is produced by the acceleration of a mass of water by means of the blades of the paddle wheels. The driving power is thus characterised by the drive produced in the water by the blades, which may be expressed by the following formula:

$$S = c \frac{\gamma}{g} F \times V_z (V_z - V_e) \quad \ldots (1)$$

wherein c = a test coefficient,

γ = the specific weight of the water,

g = gravity,

F = the surface of two simultaneously immersed blades of the two propeller wheels,

V_z = the peripheral velocity at the blade rim diameter.

V_e = the water velocity relatively to the boat taking into account the back lash.

*) See Schaffran: Jahrbuch der Schiffsbautechnischen-Gesellschaft 1918.

Digitized by Google

As only qualitative relations will be examined and the back lash may be taken = 0, we may assume that V_e represents the ship's speed relatively to the water. For rivers of limited dimensions this simplification is not admissible although the final conclusions of this study remain qualitatively unaltered also in this case.

The difference $V_z - V_e$ for the same wheel depends on the speed and the torque of the driving engine. It is a purely experimental relation, which is characterised by the expression of the slip

$$s_n = \frac{V_z - V_e}{V_z} \quad \ldots\ldots\ldots\ldots (2)$$

and in turn is a measure for the propeller efficiency. This efficiency is the ratio between the total towing output SV_e and the output developed by the engine $N = 2\pi n M$, wherein n is the number of revolutions per second and M the torque.

The efficiency $$\eta = \frac{SV_e}{2\pi n M}$$

On the other hand according to formula (2)

$$V_e = V_z (1 - s_n)$$

$V_z = D_z \times \pi n$ (D_z = blade rim diameter)

$$\eta = \frac{S \times D_z \times \pi \times n (1 - s_n)}{2\pi n M} = \frac{S}{M} \times \frac{D_z}{2} (1 - s_n)$$

This is the propeller efficiency. This expression, however, does not allow the engine output being determined from the towing output SV_e as the propeller itself absorbs part of the engine output as friction and eddies. This supplementary work, which is useless for the drive of the ship, is expressed by a value R, amounting to from 5 to 10 per cent of the engine output. In the following R is assumed to be 0.05, so that the towing efficiency of the prime mover may be expressed as follows:

$$\eta_m = (1 - s_n) \quad (1 - R) = 0.95 \quad (1 - s_m)$$

The value of the slip s_n, at least of that part referring to the effective towing output, may be easily determined by experiment, for instance, by measuring simultaneously the pull of the hawser, the engine output and the number of revolutions at constant torque, i. e. constant admission of the driving engine, or by measuring only the pull of the hawser, the number of revolutions and the towing speed with stationary water.

Both methods, simultaneously applied, permit R being determined. In order to arrive at the total towing efficiency of the engine, the resistance of

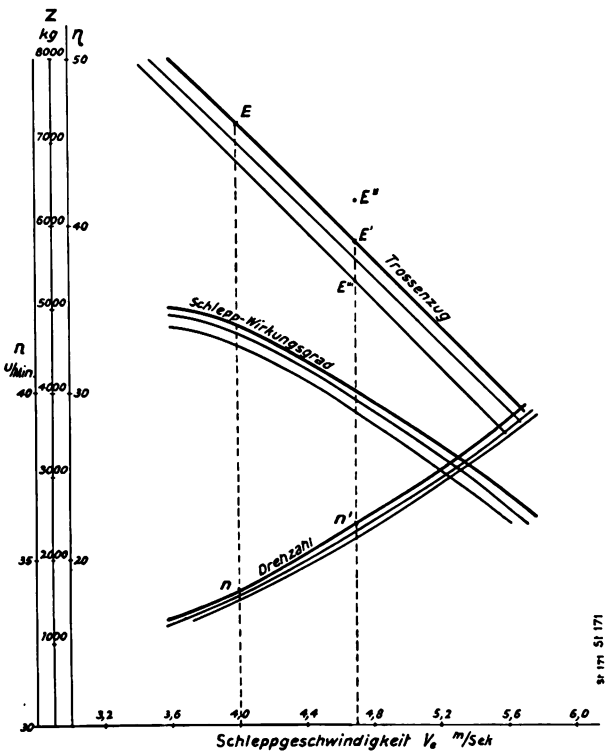

Fig. 3.

Trossenzug = Pull of hawser; Schlepp-Wirkungsgrad = Towing efficiency; Drehzahl = Number of revolutions; Schleppgeschwindigkeit Ve m/sek = Towing speed Ve in metres/sec.

the tug, which may be ascertained by tests with models or by calculating the individual resistances, must be added to the measured pull of the hawser.

In any case we will find that there is a definite relation between the towing power, towing speed and number of revolutions of the propeller. This relation may be illustrated by curves as shown in Fig. 3. The towing speeds are taken as abscissae and we obtain a curve z for the pull of the hawser, another curve for the speed n and yet another curve for the efficiency. The curves drawn in thick lines are valid for a certain torque, i. e. for a reciprocating engine with constant admission. Such curves could be plotted for any torque.

The curves of Fig. 3, which are not further considered, merely refer to the effective pull of the hawser. For our purposes the resistance of the tug will also be taken into account.

Digitized by Google

From the above example, the positions a—b and a′—b′, each corresponding to a certain towing speed, may again be studied.

If, by chance, the conditions appertaining to the two positions can be represented by two points E E′ on the Z-curve, Fig. 3, then indeed equal speeds relatively to the river bed are produced in both positions without having altered the admission of the engine. In the positions a—b and a′—b′ the engine will make n and n′ revolutions per minute. If, however, position a′—b′ is one point E″ higher than indicated in the curve, the towing speed can no longer be maintained without increasing the admission and number of revolutions. At a point E‴ below the Z-curve the towing speed will increase if the admission is not reduced.

In consequence thereof whilst towing on a river with variable water velocity permanent fluctuations of the towing speed, number of revolutions of the propeller and of the output developed by the engine will manifest themselves, and it is of the utmost importance that these facts be taken into account when selecting the prime mover.

We will now investigate how a reciprocating engine and a steam turbine behaves under the above-mentioned service conditions.

Firstly it is a well-known fact that an elementary turbine consisting of a guide wheel with a certain number of nozzles, and a runner wheel, consumes a constant quantity of steam when the pressure and temperature before the guide wheel and the pressure after the guide wheel remain constant. However, the efficiency, i. e. the ratio of the work produced and the adiabatic heat drop varies with the speed. If we exclusively study the blading, the efficiency will solely depend on the ratio $\frac{u}{c_o}$ — i. e. of the peripheral velocity u to the steam velocity c_o. As the latter only depends on the adiabatic heat drop, which is assumed to be constant (the admission mechanism having a fixed position), the efficiency may be referred to the peripheral velocity, or simpler still, to the number of revolutions.

In an ideal turbine, in which the inlet and outlet angles of the runner wheel blading are equal and very small, and the steam velocity suffers no diminution by friction and eddies in the runner wheel, the efficiency at the zero turbine speed will also assume the value zero. It will increase with increasing speed, attain a maximum, and then diminish again to zero at a speed, which is twice as high as the speed n_m corresponding to the maximum efficiency. If the number of revolutions be taken as abscissae and the efficiency as ordinates, the latter are then represented by a parabola, whose axis will be an ordinate over n_m, Fig. 4.

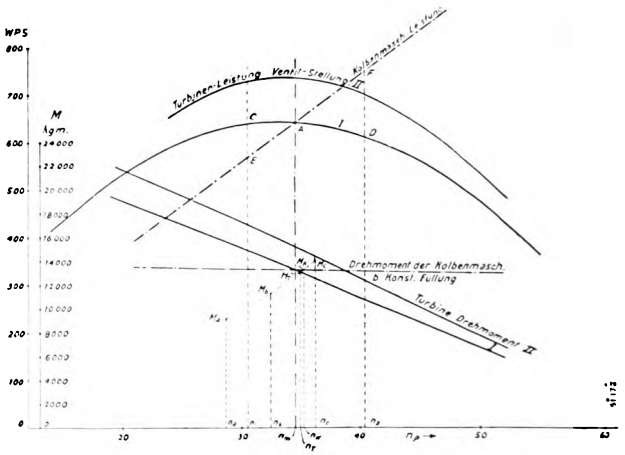

Fig. 4.

Kolbenmasch. = Reciprocating engine; Turbinenleistung Ventil-Stellung II = Turbine output at valve position II; Drehmoment der Kolbenmasch. b. konst. Füllung = Torque of reciprocating engine at constant admission; Turbine Drehmoment II = Turbine torque II; WPS = S. H. P.; kgm = kilogram/metres.

As the heat drop remains constant, it follows that the outputs developed may also be represented by a parabola. If now we divide the output by the corresponding number of revolutions, we obtain the torques M, which, plotted over the same abscissae, appear as a straight line. This line intersects the ordinate axis in a point corresponding to the maximum torque, viz. the starting torque, at the speed = 0, and the abscissa axis in the point of maximum speed, i. e. no-load speed, or no-load. The starting torque is, therefore, twice as great as that corresponding to the maximum or normal output.

If the admission valves are further opened, the pressure in front of the guide wheel increases, the adiabatic heat drop is thereby also increased and consequently also the steam velocity and the quantity of steam passing through the turbine. This new position of the admission valves corresponds to a new output parabola, intersecting the abscissa axis in the same points as the first parabola.

If the control valves were already fully opened, the quantity of steam flowing through the turbine and also the output may be increased by opening additional guide channels. In this case the drop remains constant and only the quantity of steam

Digitized by Google

increases. In practice the turbine is subjected to other losses than those determining the ideal efficiency. Impacts arise at the inlet of the runner blades. The inlet angles, which must not be too small, correspond to the direction of the relative speed only at the normal number of revolutions, whilst at higher or lower speeds shocks occur on one or the other side of the blade edge. In addition, further losses are caused by the friction of the wheel in the steam, by eddies and windage in the runner blades not under steam, and by friction in the bearings and glands, etc. These additional losses prevent the maximum ideal value of the efficiency being reached. The curve representing this efficiency will at low speed approach the ideal parabola, but will deviate therefrom progressively, the higher the speed. The actual efficiency curve, though, parabolic will lie below the ideal curve and will intersect the velocity axis at a no-load speed, which amounts to less than twice the ideal normal speed. The maximum efficiency will also correspond to a lower speed than the ideal maximum speed. To this actual output curve there corresponds a curve of moments, approaching the ideal straight line at maximum efficiency, but deviating from it on both sides.

Normally a turbine consists of a number of such elementary turbines. As the mechanical losses of the individual stages manifest themselves as a transformation into heat and the following stage profits by this increased heat content, it follows that the efficiency of a multi-stage turbine will be higher than the mean value of the efficiencies of the individual stages.

For our purposes it suffices to know that for a certain position of the admission valves, the output may be approximately represented by a parabola as a function of the speed, and the torque by a straight line intersecting the coordinates.

The service characteristics of the reciprocating engine differ widely from those of the turbine. We can for instance assume that the torque at constant steam conditions and constant admission does not vary with the speed. Athough the mechanical losses and also the throttling losses increase with the speed, the efficiency indeed remains practically constant because the condensation losses become smaller.

It may, therefore, be assumed that the torque can be represented by a straight line lying parallel to the abscissa axis, or approaching the latter just a little when the speed increases. Consequently the output will be proportional to the speed and may be represented by a straight line, or nearly a straight line, passing through the coordinate zero point. The steam engine at constant admission really has no no-load speed. The output increases as long as the speed increases. This is at least the case within the speed limits determined by our comparison with the turbine.

The output and torque curves of both types of machines are now plotted on a common diagram on the assumption that both have the same normal output at the same normal speed. The number of revolutions are taken as abscissae, as before, see Fig. 4. Let us now assume that the travelling conditions as stated above, cause fluctuations in the speed. Let us further assume that when the tug is driven by a reciprocating engine, the number of revolutions fluctuates from n_1 to n_2. These speed limits correspond to the outputs E and F. If the tug be driven by a turbine, and the admission valves remain unaltered, the two extreme speeds correspond to the outputs C and D.

If the towing resistance increases, which corresponds to a lower speed, it is obvious that the turbine has a higher output than the reciprocating engine. This relatively higher output, however, causes the turbine to acquire a higher speed than the reciprocating engine, resulting in a correspondingly higher towing speed. When the towing resistance diminishes, the output, speed and the towing speed with turbine drive become smaller than with reciprocating engine drive. This peculiarity of the turbine may be considered to be favourable; that is, however, only the case when the maximum output at the normal speed n_m coincides with the mean towing speed, i. e. when the increased and reduced outputs during the trip are approximately evenly distributed about the mean output corresponding to that of the reciprocating engine. It is, therefore, important that the designer informs himself on the towing conditions and especially on the mean towing output and speed. This precaution is not of the same importance for the installation of a reciprocating engine, the less so when we study the steam consumption of both types of machines. It may be assumed that the reciprocating engine consumes a quantity of steam, which is proportionate to the speed and consequently also to the output. If we plot this steam consumption against the number of revolutions as abscissae, it is represented by an

Digitized by Google

approximately straight line passing through the origin of the coordinates.

With the turbine, the quantity of steam consumed remains practically constant for all speeds, which may be represented by a straight line parallel to the abscissa. If the outputs required for the towing service are approximately evenly distributed about the normal output and the steam consumption at this normal condition is identical for both types of machines, it may be assumed that both machines operate equally economically. If, however, the turbine has a smaller normal steam consumption than the reciprocating engine, the higher economy of the former may be utilized to produce a higher parabola of output.

The admission valves are now further opened in such a manner that the steam consumption lines again intersect at the normal speed. The better economy of the turbine at equal mean output of both types of machines manifests itself either as a pure saving in fuel per mile travelled, as a saving in time, or that a heavier train may be towed over the same stretch in the same time.

From the above considerations it may be inferred that towing with turbines is most economical when the turbine is operated with its normal speed, or with speed fluctuations evenly distributed about this normal speed. If the towing conditions, i. e. the number of barges, their draught and the water velocity are such, that the normal speed of the turbine cannot be attained at the existing position of the admission valves, it is advisable either to increase the pressure before the first guide wheel if the maximum pressure has not yet been reached, or to add further guide nozzles. Each of these possibilities corresponds to a different parabola of outputs and a straight line of torques. The normal speed remains approximately constant. Each parabola corresponds to a certain total quantity of steam, which, however, is not proportional to the momentary maximum output, because at constant speed the specific steam consumption differs per unit of output. There is an output parabola, which corresponds to the parabola of maximum efficiency.

In the following, a concrete case will be examined for a certain typical stretch with a view to comparing the towing speed, towing output, machine output and number of revolutions of a reciprocating engine and a steam turbine of equal mean output. Referring to Fig. 1, we will assume that it represents a mean fluctuation of the water velocity.

Each value of the total resistance of the train of barges corresponds to a tangential force acting on the periphery of the paddle wheels. If the efficiency of the paddles were = 1, we could write

$$ZV_e = P \times \pi \times D_z \times n$$

wherein Z signifies the travelling resistance and P the peripheral force of the wheels. The resistance losses of the paddles would chiefly consist of the slip, the friction and eddy losses of the blading caused by the water, which reduce the effective thrust. These resistances diminish the efficiency by a few hundredths.

Assuming as before

$$\eta_p = (1 - s_m)\ (1 - R)$$

wherein η_p = efficiency of propeller,
s_m = slip,
R = friction and eddy losses (for the sake of simplicity we will assume R = 0.5), then

$$N_e = \frac{ZV_e}{(1 - s_m)\ (1 - R)}$$

If we have a curve of the efficiencies of the tug paddles plotted as a function of the total travelling resistance, such as may be obtained from a series of tests, then the effective engine outputs EHP can be calculated. Such a curve is illustrated in Fig. 5. If, in the diagram Fig. 6, we plot the results of our calculations over the same abscissae (distance travelled), we obtain for each of the constant speeds relatively to the shore V_e = 3.9, 3.4 and 2.9, a curve of the required outputs.

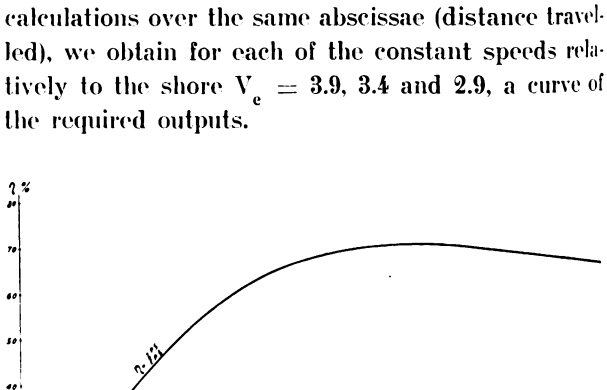

Fig. 5.

Digitized by Google

On the other hand we know that

$$V_z = \frac{V_m}{(1-s_m)} \quad \text{and}$$

$$s_m = 1 - \frac{\eta_p}{1-R}$$

We can determine the paddle blade circular velocity V_z and $n = \frac{V_z}{2\pi D_z}$, the number of revolutions per hour and plot them in the same diagram.

Using the N_e and n curves for the three speeds V_e, we will now ascertain which outputs the reciprocating engine on the one hand, and the steam turbine on the other will develop in the river sections in question, and the corresponding number of revolutions. Each ordinate corresponds to three outputs N_a N_b N_c and the pertinent speeds n_a n_b n_c. At each point of output, the corresponding torque, for instance $\frac{75\ M_a}{2\pi D_z}$, is plotted perpendicularly to the ordinate, and the points M_a M_b M_c connected by a curve. The auxiliary diagram, Fig. 4. is now used. The torques were so chosen that the outputs of both types of machines coincide at point A, which is quite arbitrary and may be adjusted by altering the admission or the number of nozzles. In this diagram, the values M_a M_b and M_c are plotted to the corresponding values of n_a n_b and n_c. The curve obtained intersects the curve of moments of the reciprocating engine and turbine in the points M_k and M_t having n_k and n_t as abscissae. M_k and M_t are now drawn in Fig. 6 and we then obtain the required outputs N_k and N_t. We can also insert the speeds n_k and n_t. By repeating this process for each ordinate of Fig. 6, we obtain a curve of the outputs developed by the steam engine and steam turbine along the stretch of river at a constant setting of the admission valves, and curves of the corresponding speeds, which are plotted in Fig. 7 as curves over the stretch of river as abscissae. In the same diagram the water velocities are also plotted. This illustration shows us that the steam engine output fluctuates considerably more than that of the steam turbine and that the number of revolutions also deviates. As the steam consumption of the turbine thereby remains constant, and that of the steam engine, varies with the output, it is easily seen under which conditions the steam turbine works more economically.

The same method may be employed for the diagram, Fig. 2, by interpolating and extrapolating between the values of Z and V_m in order to find the hawser pull and the towing speeds developed by the reciprocating engined and turbine driven tugs.

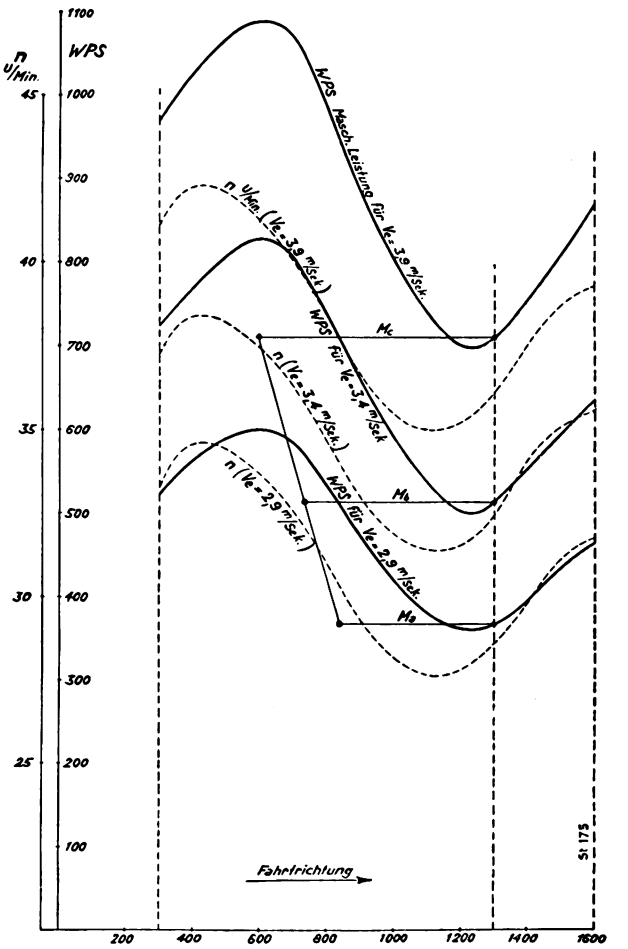

Fig. 6.

WPS Masch. Leistung für Ve = 3.9 m/sek. = SHP machine output for Ve = 3.9 metres/sec. Fahrtrichtung = Direction of travel. U/Min. = R. P. M.

Finally the curve of the actual speed relatively to the shore can be thereby determined.

With these data it would further be possible to determine the total steam consumption for the stretch in question. The final results of this investigation are:

1. The steam turbine works the more economically, the less its speed deviates from the normal, even if this must be obtained by increasing or reducing the output.

2. At the improved specific steam consumption of the turbine due to reduction of output, and for

Digitized by Google

the same train of barges, it must be considered whether the longer duration of the journey due to the lower towing speed does not offset the advantage aimed at.

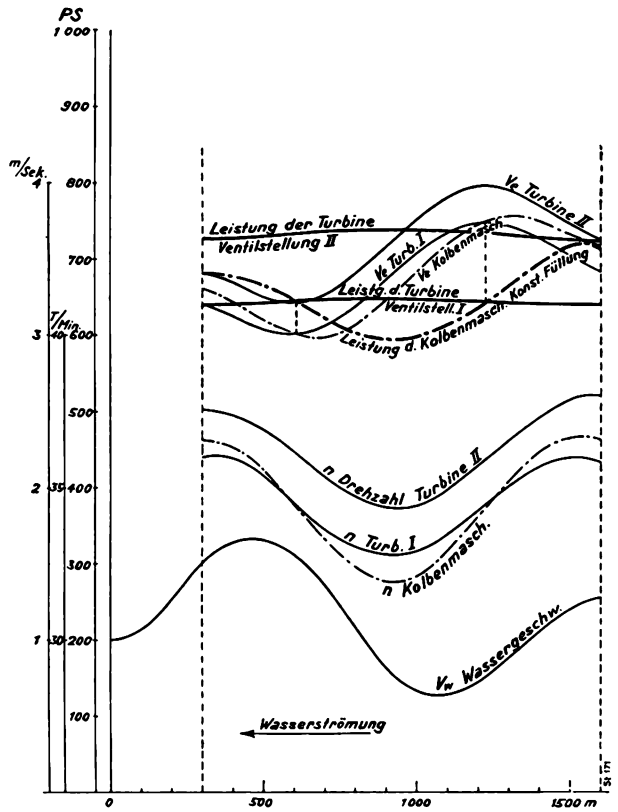

Fig. 7.
Leistg. der Turbine Ventilstellung II = Output of turbine at valve position II; Leistung d. Kolbenmasch. konst. Füllung = Output of reciprocating engine at constant admission; Drehzahl = Speed r. p. m.; Wassergeschw. = Water velocity; = Wasserströmung = Flow of water, PS = HP; m/sek. = metres/sec ; T/Min. = r. p. m ; m = metres.

3 By employing torque regulation, the turbine service could be rendered identical to that of a reciprocating engine from the viewpoint of the engine driver. However, the steam consumption would not be the same with both types of machines.

In any case it is evident that a steam turbine as prime mover for a tug will only be a success if the towing conditions and the current conditions of the river in question are known. A modern turbine, however, with its smaller weight and at the outputs required by paddle wheel tugs, will nearly always have a considerably better steam consumption than a reciprocating engine, which in all cases renders it more economical even when the service conditions do not allow the maximum efficiency being obtained. There is yet another problem, which should be investigated, viz: to compare the manœuvring capacity of the turbine tug with that of the reciprocating engine tug. However, we will reserve this study for a later number of our «News».

This present study was only intended to draw attention to the fundamental difference between the two kinds of drive, and it is, therefore, superfluous to discuss all phenomena influencing the service. It is sufficient to mention that the towing resistances are largely dependent on the cross-section of the river and that the propeller efficiency can differ widely according to whether the river bed approaches the wheel blades or recedes from them.

It should also be mentioned that the accelerating forces of the train and even the differences of level, which have to be overcome, should be taken into account. However, a greater accuracy in the investigation would not affect its final results.

Digitized by Google

Grating cleaning machines.

By G. Grossmann.

Like all other power-developing machinery, the water power machines have during recent years been subject to a continual increase of their output and consequently also of their dimensions. With the increased size of the machines, the dimensions of the buildings, of the head race and tail race, the inlet apparatus and of the gratings have also been correspondingly enlarged. The usual method of cleaning the gratings by hand by means of a rake fixed to a long pole, which suffices for small and medium-sized plants, cannot be considered for large power plants owing to the dimensions involved. Thus, for instance, the grating of the Kachlet Power Station of the Rhein-Main-Donau A.-G. has a length of 850 feet, the grating bars being 18½ feet long. The grating of the Shannon Power Plant has a length of 300 feet and the grating bars are 42 feet long.

When the water contains only little debris and is not very deep, cleaning by hand may be performed even in large plants, but in the Autumn, when the water carries large quantities of leaves, a satisfactory cleaning of the grating even with a large number of workmen becomes impossible. On the other hand, the tendency nowadays is to mechanise the service of power stations as far as possible and to reduce the number of attendants to a minimum of trained and indispensable hands. Therefore, it became necessary to design mechanical devices for cleaning the grating of water power plants. With the aid of these grating cleaning machines a skilled workman can keep a large grating surface clean even when the water carries a great amount of debris. Large gratings will necessitate the operation of two and more machines simultaneously.

The firm of Messrs. Escher Wyss & Cie. have from the very beginning devoted their attention to the problem of the mechanical cleaning of gratings and have since designed various types of grating cleaning machines of very robust and reliable design, which have given every satisfaction under the most difficult and strenuous service conditions. The characteristic features of these machines will be described in detail in the following lines.

Every grating cleaning machine consists of the main structure travelling on wheels, the chariot with the rake, the lifting mechanism, the tipping gear and the travelling mechanism. As the grating cleaning mechanism, i. e. mechanism for operating the rake, is the most important section of the machine, we will begin with its description.

The grating rake consists of the chariot and the rake proper. The chariot is a robust heavy cast-iron body moving on rollers, to which the rake mechanism is fixed in such a way that it can swivel. Inside of the grating cleaning machine, the rollers run on guides, which reach up to the top edges of the grating bars; on the rake, the rollers run on the front surfaces of the bars. Cleaning by means of the rake is performed by lowering the chariot with the rake during which operation the former pushes all debris in front of it. As soon as the chariot has reached its lowest position, the rake tilts over, grips the debris and carries it along with it when moving upwards. During this upward movement, the prongs of the rake enter the interstices of the grating bars to such a depth that these interstices are completely rid of the debris. The rake thus does not merely glide over the surface of the grating. Fig. 1 illustrates the rake in this cleaning position.

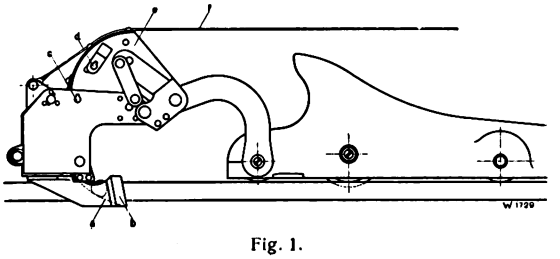

Fig. 1.

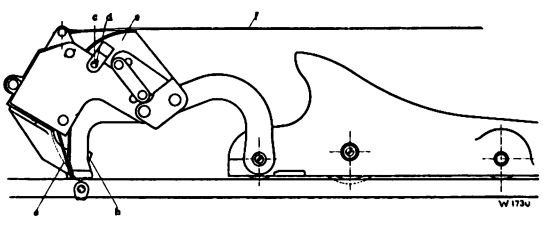

Fig. 2.

Digitized by Google

At the points where the interstices of the grating bars are interrupted by the necessary distance pieces, the rake can without difficulty glide over these latter being provided at each end with so-called guide prongs b, which are differently shaped to those of the cleaning prongs a, Fig. 1. By means

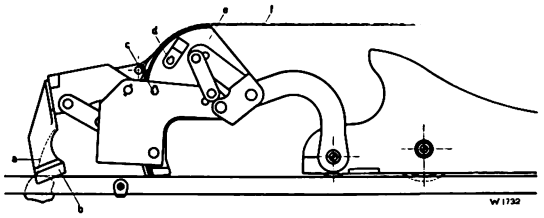

Fig 3.

of these guide prongs the rake is raised by the height of the distance pieces, Fig. 2. Should the cleaning prongs encounter a foreign body, so firmly jammed in between the grating bars that it could not be removed by the lifting power of the rake, the latter yields, as shown in Fig. 3, and glides over the jammed foreign body. Fig. 4 illustrates the rake in the raised position in which the foreign bodies collected by the rake are discharged into a truck. At times when the water carries but few and easily removable foreign bodies, the rake can be fixed by means of bolts, which are inserted in the openings c and d in such a manner that the prongs only slightly enter the interstices of the grating bars, thereby minimizing the wear on the pocket mechanism.

Figs. 5, 6 and 7 show the chariot with the rake in various positions; in Fig. 5 ready for cleaning, in Fig. 6 tilted for discharging, in Fig. 7 descending.

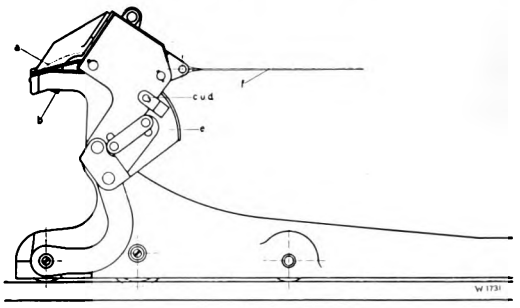

Fig. 4.

The design of the rake is the same for all types of Escher Wyss grating-cleaning machines and only the width varies according to the size of the machine. For small machines the width is 45″, for medium-size machines 48″ and for large machines 69″.

Referring to the drawings of a three-motor machine, reproduced in Figs. 8 to 10, we will now describe the other parts of the grating-cleaning machine.

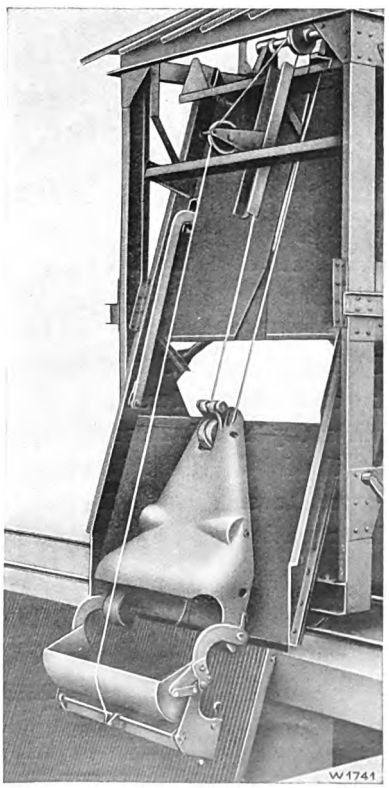

Fig. 5.

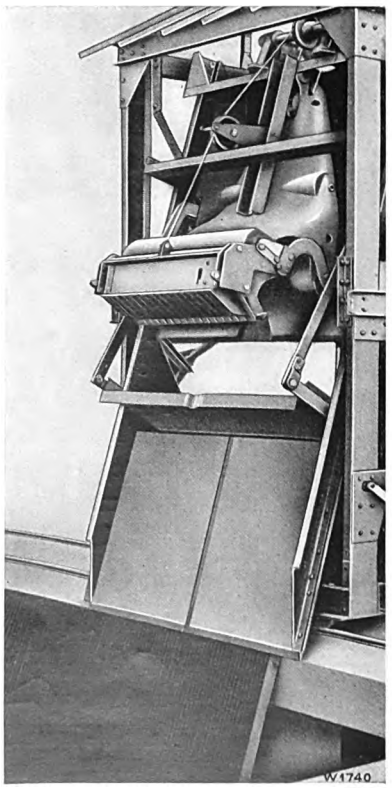

Fig. 6.

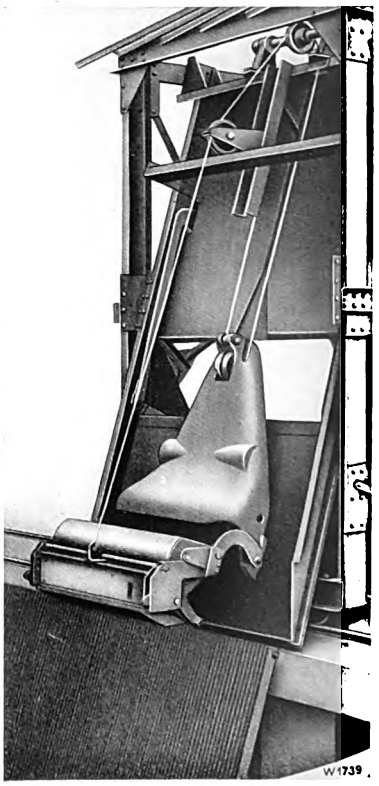

Fig. 7.

Digitized by Google

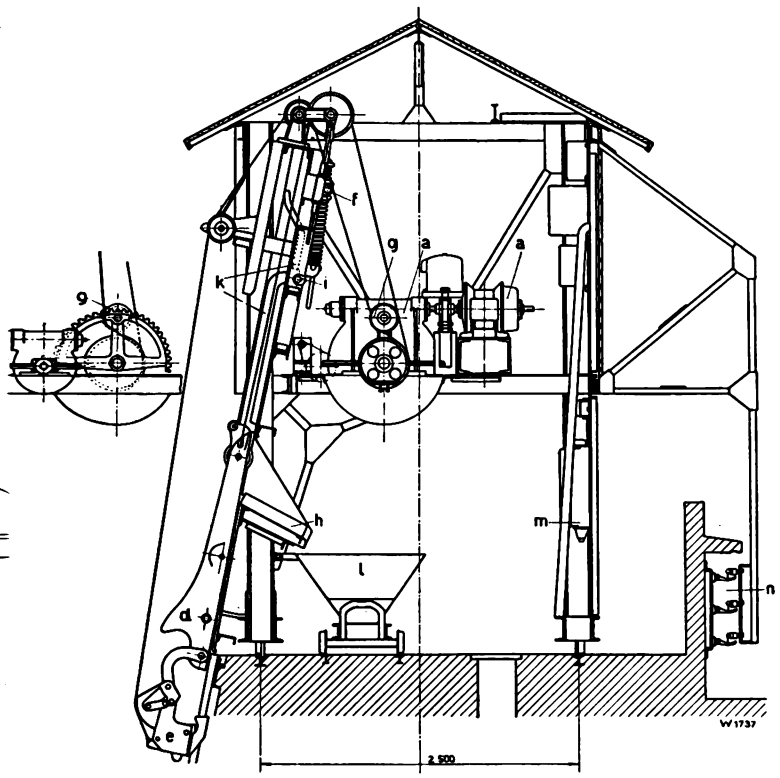

Fig. 8.

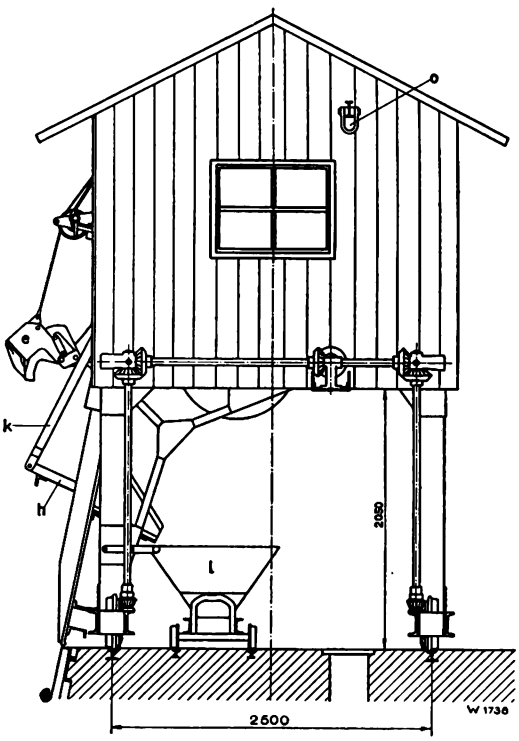

Fig. 9.

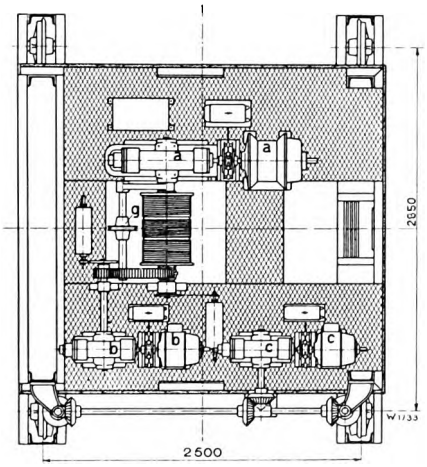

Fig. 10.

A detailed description of the superstructure travelling on four wheels may be dispensed with, as the lay-out is self-explanatory from the drawings.

The hoisting mechanism *a* consists of the driving motor; the shoe brake operated by an electromagnet; the worm gear and the rope drum on which the double rope carrying the chariot is wound. The lifting ropes run over two rope pulleys fixed on the rope pulley shaft, which in turn is fixed to the roof construction of the superstructure in such a manner that the shaft can swing. This oscillating rope pulley shaft is kept in position by means of the spring *f* and the rods of a slack rope and overload limit switch are linked to it; a description of these switches will be given when discussing the operating cycle of the grating-cleaning machine.

The driving mechanism of the tipping gear *b* consists of the same elements as that of the hoisting mechanism, i. e. the driving motor, the shoe brake and the worm gear. The pinion mounted on the axle of the worm wheel engages a toothed segment, fixed on one end of the pulley shaft, which is not rigidly keyed to the latter but fixed in such a manner that it can oscillate. This segment is connected with a similar non-toothed segment at the other end of the pulley shaft by means of a cross bar. The tipping rope is led over the lose pulley *g* fixed in the middle of the cross bar connecting the two oscillating segments; one end of the rope is attached to the pocket of the rake, the other to the middle of the hoisting rope drum. By swinging the tipping segments in one or the other direction, the rope attached to the pocket is either shortened or lengthened and the pocket accordingly raised or lowered.

The arrangement of the travelling mechanism is similar to that of the other mechanisms; it drives by means of bevel wheels situated on each side of the frame two of the runner wheels.

Assuming the grating-cleaning machine to be stationary and the rake chariot to be in its upper-

Digitized by Google

most position with the pocket tilted upwards, an operating cycle is performed as follows:

By turning the handwheel of the starter *m*, Figs. 8 to 10, the motor of the hoisting mechanism is started. The electro-magnet releases the brake and the rake chariot glides downwards until it is stopped in the lowest position by the limit switch, actuated by the hoisting mechanism, which cuts out the motor and causes the brake to function. If the chariot during its downward movement encounters a body, which is so firmly jammed between the grating bars that even the considerable weight of the chariot does not suffice to remove it, the tension of the two hoisting ropes diminishes, spring *f* moves the oscillating pulley shaft upwards and actuates the levers of the slack rope limit switch, linked to the pulley shaft, which at once stops the motor. The rake can then be brought into action by means of the tipping mechanism and remove the obstacle. The lowering movement can also be interrupted at any instant by turning back the handwheel of the starter into its central position, or by operating a push-button. The chariot can only be lowered when the pocket is tilted upwards. When the chariot has reached its lowest position, the rake is lowered and the pocket closed by operating the push-button marked «close» of the tipping mechanism, whereby the motor of the tipping mechanism is started. During this tipping movement a limit switch similar to that of the hoisting mechanism and which cuts out the motor of the tipping mechanism as soon as the rake has reached the «cleaning» position is automatically actuated. The tipping movement can also be interrupted at any moment by operating a push-button.

The rake is now raised by turning the handwheel of the starter for the hoisting motor in the direction of «hoisting». The debris collected in the pocket during the downward travel of the chariot and that removed by the prongs of the rake from the interstices of the grating bars is pushed upwards. In the uppermost position the hoisting movement is automatically interrupted by the limit switch. Should the lifting of the chariot be obstructed by obstacles, which cannot be removed in the normal manner by means of the cleaning mechanism and thereby cause excessive stressing of the hoisting ropes, then the double limit switch of the hoisting mechanism described above operates in the opposite direction as overload switch and stops the motor. By means of the push-button, the hoisting movement and all other movements of the individual mechanisms of the ma-

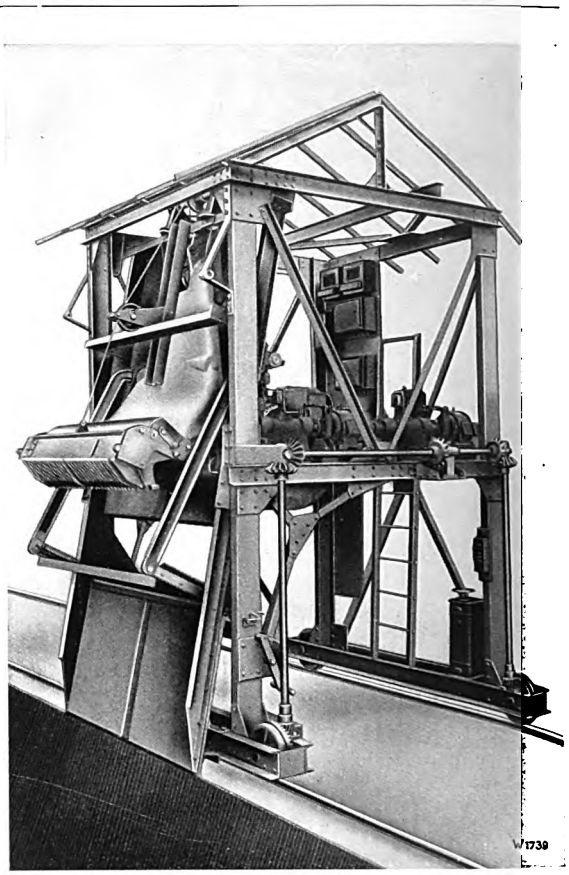

Fig. 11.

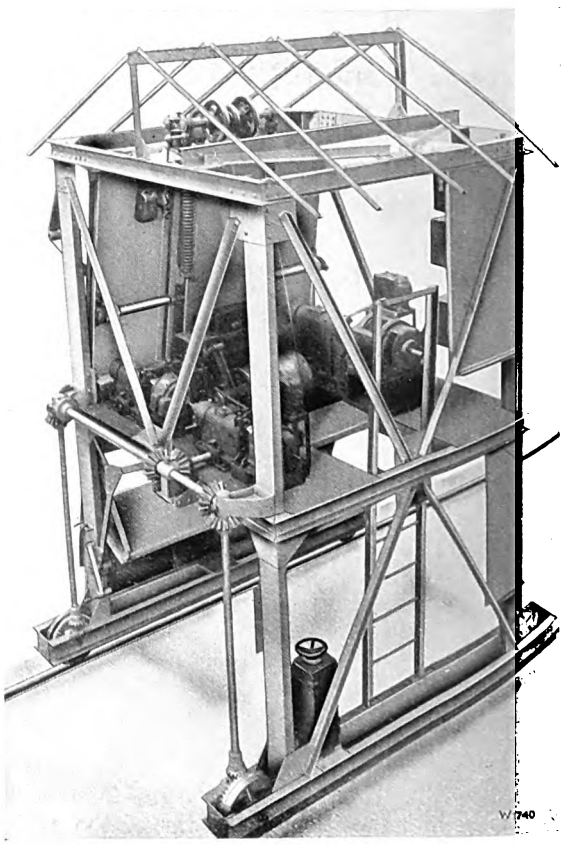

Fig. 12.

Digitized by Google

Fig. 13.

chine can be immediately stopped at any moment. The machine cannot be shifted from its place whilst performing a cleaning operation as an interlocking mechanism prevents the travelling mechanism being started.

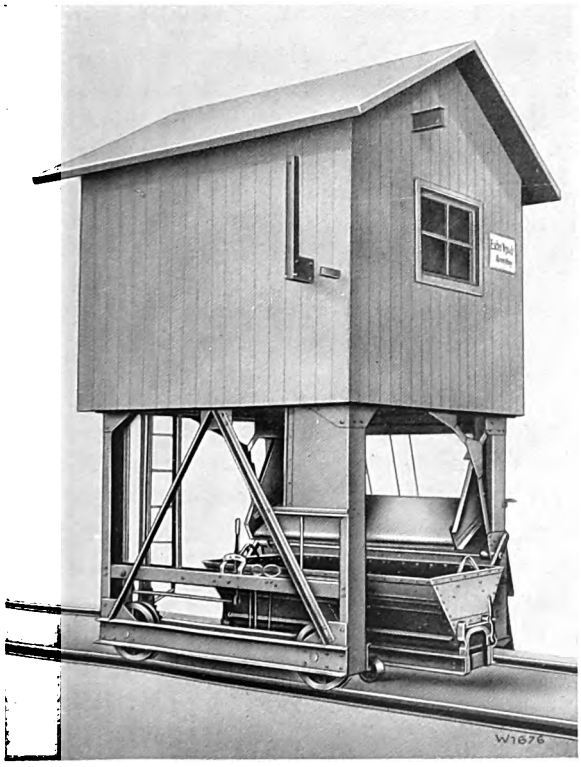

Fig. 14.

To discharge the pocket in its uppermost position, it is raised by means of the tipping motor which is started by pressing a push-button. The collected debris is either discharged through a slot directly into the truck *l* when the angle of the rake permits, or otherwise into a hopper *h*, automatically moved into position by the chariot by means of the bars *k*, and thence dumped into the truck. As soon as a section of the grating is cleaned, the whole machine is shifted on by the breadth of a grating section. This is achieved by pressing the push-button corresponding to the desired direction of travel.

When the machine has travelled the distance indicated, the travelling mechanism is automatically stopped by means of a double limit switch operated by one of the curved plates arranged at intervals corresponding to the width of a grating section throughout the whole length of the grating platform. Of course the machine can be made to travel any desired distance by continuous depression of the push-buttons controlling the travelling mechanism.

All mechanisms of the different movements are electrically interlocked in such a manner that only one movement can be performed at a time.

To give the reader an idea of the times required for the individual operations, we have compiled the following table giving the times for the grating of the Shannon Power Station in Ireland. As mentioned above, the full breadth of the grating of this plant is 300 feet, the length of the grating bars 42 feet and the total lift of the rake chariot 55 feet.

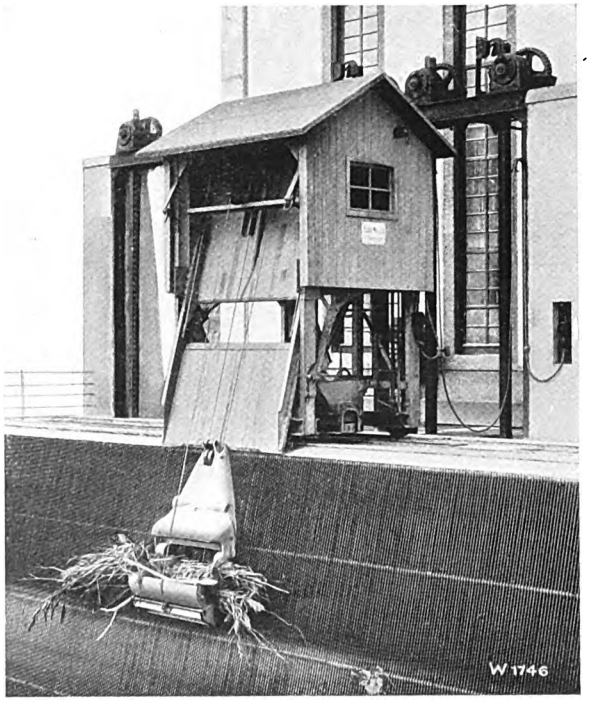

Fig. 15

Digitized by Google

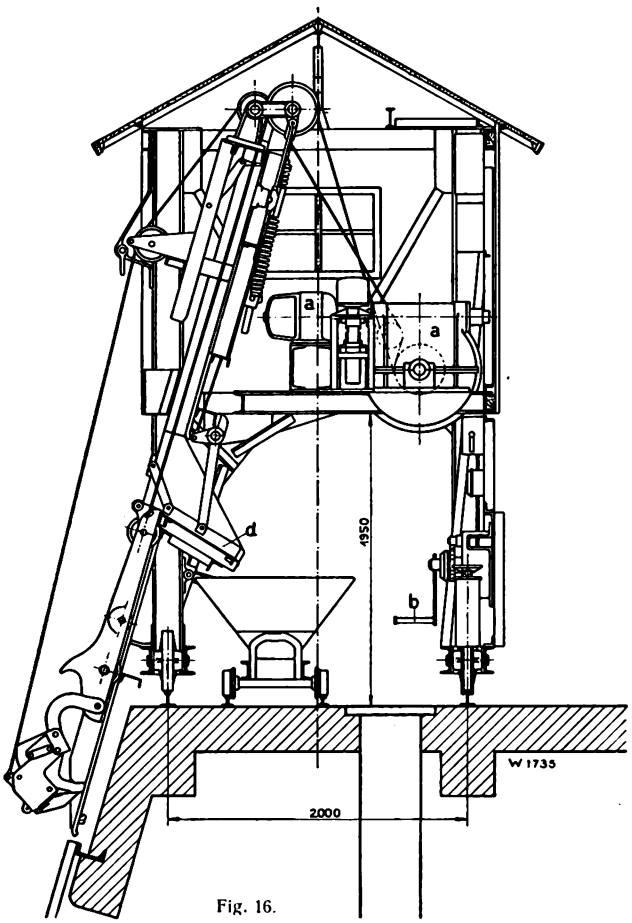

Fig. 16.

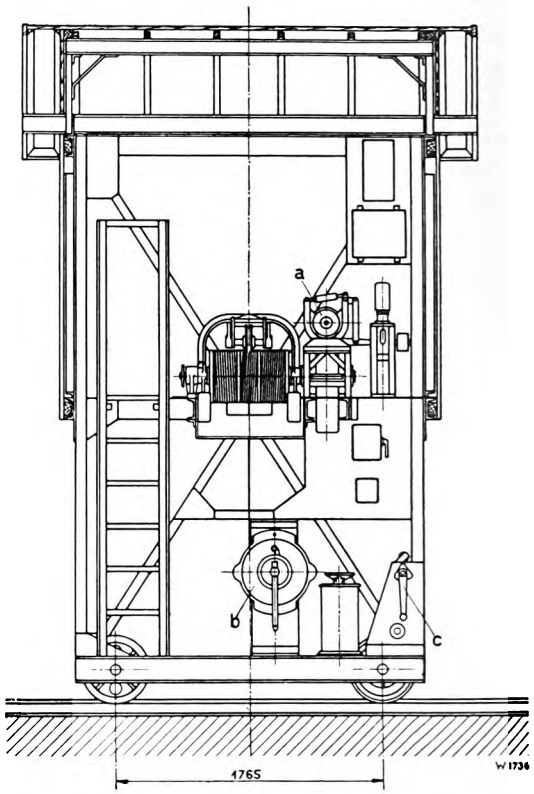

Fig. 17.

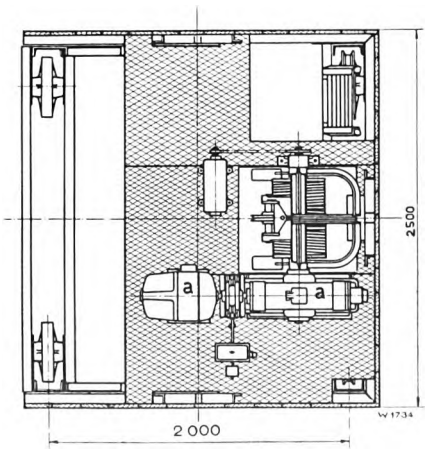

Fig. 18.

	Time in seconds		
	Travelling	Hoisting	Tipping
Downward movement of rake chariot		49	
Lowering of rake			10
Hoisting of chariot . . .		49	
Opening of pocket			10
Shifting machine by the breadth of one grating section . .	6		

Time required for one complete cycle of operations = 124 seconds. Therefore, with a total length of 300 ft., 54 complete cycles are necessary, or in other words, the grating is completely cleaned once in 1 hour and 52 minutes. The times stated include an ample margin for the manipulations of the operator.

Figs. 11 and 12 are photographs of the three-motor machine taken in the workshops; the details of the driving mechanism are plainly visible. Fig. 13 is a close-on view of the same machine.

For gratings of smaller dimensions a one-motor cleaning machine suffices to do the work. Messrs. Escher Wyss & Co. build two types of this machine. The first has motor drive for the hoisting, tipping and travelling motions, the required motion being cut in by hand by means of a clutch and reversing gear. The other has motor drive for the hoisting motion only, whilst the travelling and tipping motions are performed by hand. The first type is illustrated by the photographs Figs. 14 and 15, the second by the drawings Figs. 16, 17 and 18.

Digitized by Google

The peculiar design of the rake covered by patents and the extremely robust construction of the rake and driving mechanisms enable heavy and cumbersome bodies, such as branches, tree trunks and boards to be removed from the grating. A further advantage of Messrs. Escher Wyss & Co.'s grating-cleaning machine is that the ice adhering to the grating bars may be removed by the prongs of the rake. Blocks of ice can be broken up by the chariot and fetched out of the water by means of the rake.

In conclusion we would mention that girder brackets are provided on both sides of the machine, serving as supports for pulley blocks used to withdraw or lower the dam beams.

The dam beam hoisting gear can also be erected as separate mechanism inside the cleaning machine, or arranged for coupling with the hoisting mechanism of the machine.

The current is collected by any of the known methods, in Fig. 8, by means of a bracket fixed at the side of the machine behind a protective partition.

Concern Works and Firms in foreign countries

and

list of our offices and representatives.

Country	Town	Address
Concern Works and Firms in foreign countries:		
Switzerland	Zurich	Escher Wyss & Cie., Zurich.
Germany	Ravensburg	Escher Wyss & Cie., Ravensburg (Wurttemberg).
	Lindau	Escher Wyss & Cie., Lindau am Bodensee.
Italy	Schio	De Pretto-Escher Wyss, Schio.
European Offices:		
Belgium	Brussels	Escher Wyss & Cie., 19, rue du Champ-de-Mars.
England	London S. W. 1	Escher Wyss & Cie., 20, Grosvenor Gardens, Westm.
France	Paris IXme	Escher Wyss & Cie., 39, rue du Châteaudun.
Germany	Munich	Escher Wyss & Cie., Gabelsbergerstr. 30/Or.
	Cologne	Escher Wyss & Cie., Gereonshaus.
	Coblentz	Escher Wyss & Cie., Ingenieurbureau, Schlosstr. 12.
Overseas Offices:		
Brazil	Rio de Janeiro	Escher Wyss & Cie., Rua Benedictinos 21-2º andar.
Chile, Peru, Bolivia	Santiago	Escher Wyss & Cie., Edificio Diaz, Casilla No. 3370.
Japan	Tokyo	Escher Wyss & Cie., Marunouchi Building, Room 322.
European Representatives:		
Alsace-Lorraine	Mulhouse	G. Holzer, 62, rue du Printemps.
	Strassburg	Hubert, Ingénieur, Boulevard de Lyon 15.

Digitized by Google

Country	Town	Address
Austria	Vienna	Victor Brünner, Ingenieur, Wien-Rotneusiedl.
	Graz	Herren Spyri & Hofer, Schillerstrasse 6.
Bulgaria	Sophia	M. Th. Balansky, Engineer, Ul. Serdika 3 a.
Germany	Berlin W. 15	Baurat Leo Galland, Kaiserallée 204.
	Mannheim	Valentin Mattern, Ingenieur, Freudenheim-Mannheim, Wilhelmstrasse 54.
Czechoslovakia	Prague II	Klicka, Ingenieur, Halkova 13.
Esthonia, Lettland, Lithuania	Riga	Const. Voegeli, Engineer, Kleine Sandstrasse 12.
Finland	Helsingfors	Aktiebolaget Mercantile, Vastra Henriksgatan 14.
Greece	Athens	D. Vrecossis, Ingénieur, rue Paparrigopoulos 3.
Holland	Hague	G. Beerenborg, Engineer, Van der Parrastraat 34.
	Amsterdam	Holima, Prins Hendrikkade 181.
Italy	Milan 112	L. Boselli & Cie., Corso Porta Nuova 11.
Jugoslavia	Maribor	E. Scherrer, Ingénieur, Zrinjskega Trg. 7.
Luxemburg	Luxemburg	Ferd. Baldauff, rue de Vrésy 29.
Norway	Oslo	H. Finnemann, Engineer, P. O. B. 4000.
Poland	Warsaw	Techn. Bureau J. Witkowski, 39, Nowogrodzka.
Roumania	Bucarest	Messrs. O. & A. Herzog, Pasaguil Comedia 2.
Spain	Barcelona	F. Vives Pons, Ingénieur, Gerona 112.
Sweden	Stockholm 3	A. Haeger, Engineer, Kungsgatan 35.
Overseas Representatives:		
Argentina, Uruguay and Paraguay	Buenos Aires	Messrs. H. & Dr. G. Keller, Calle Perù 84.
British India	London E. C. 3	Messrs. Bird & Co., 7, Gracechurch Street.
	Calcutta (India)	Messrs. Bird & Co., Kumardhubi Engineering Works.
Columbia	Bogota (South America)	Senores Uribe, Garcia Alvarez & Co., Apartado No. 952.
Dutch Indies	Amsterdam	Amsterdamsch Kantoor voor Indische Zaken, P. O. B. 123.
Egypt, Soudan, Persia and Mesopotamia	Cairo	Messrs. Häusermann & Co., P. O. B. 1649.
Guatemala	Guatemala	Messrs. Zengel & Co.
Mexico	Mexiko	C. Haas, Engineer, Apartado 2008.
New South Wales	Sydney (Australia)	Messrs. K. Knight & Co. Ltd., 59, York Street.
North America	Niagara Falls N. Y.	C. Egbert, Engineer, Gluck Building.
Queensland	Brisbane (Australia)	The Queensland Machinery Co. Ltd., 142—156, Albert Street.
South Africa	Johannesburg	Saaler & Franks Ltd.
Victoria	Melbourne (Australia)	Messrs. K. Knight & Co. Ltd., 114, King Street.

Publishers: Escher Wyss & Co., Zurich (Switzerland).
Printed by: Siegfried & Co., Zurich (Switzerland).
London Office: Escher Wyss & Co., 20 Grosvenor Gardens, Westminster, London S. W. 1.
Tokyo Office: Escher Wyss & Co., Marunouchi Building, Room 322, Tokyo.

Digitized by Google

Ja 8'31V

ESCHER WYSS NEWS

Volume II

3

May-June 1929

Published by Escher Wyss & Co. S. A.

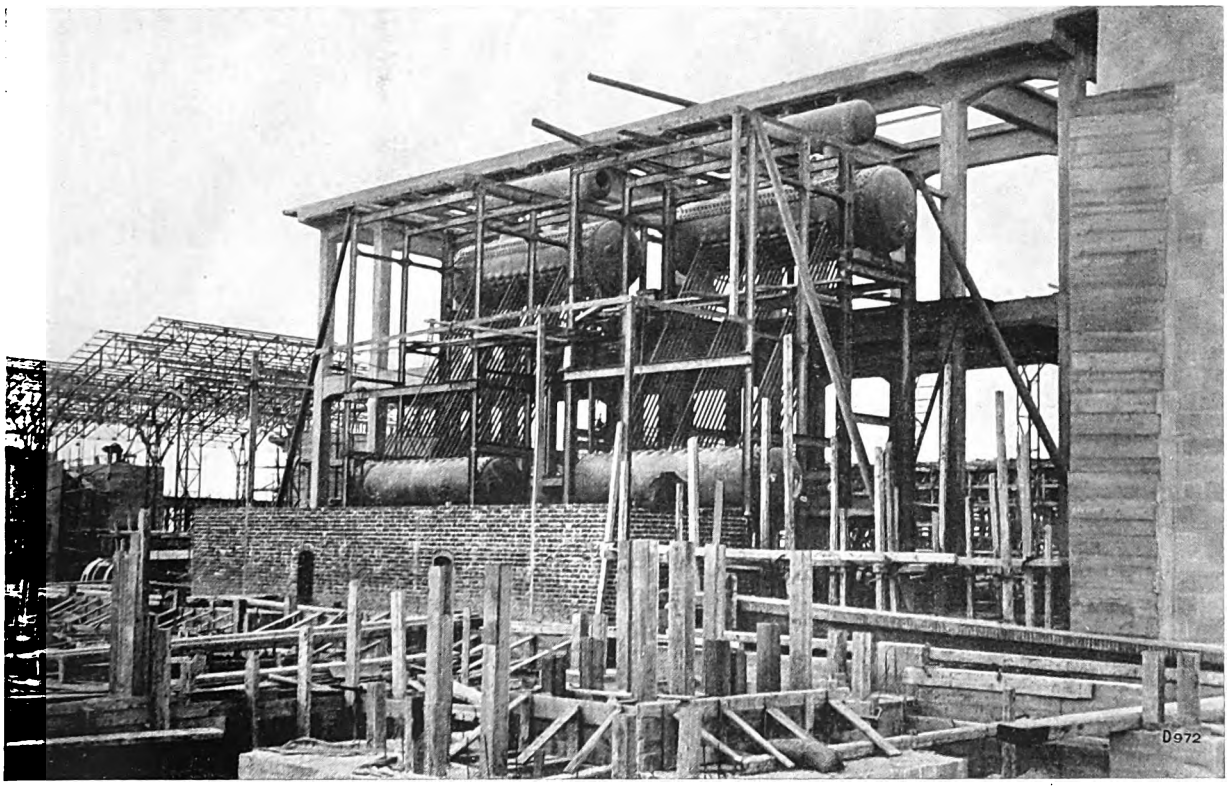

Société Egyptienne de Ciment Portland Tourah – Cairo
Erection of the steam boiler plant comprising: 3 Garbe vertical tube boilers of 2195 sq. ft heating surface each, service pressure 340 lbs/sq. in.

Contents

	Page
1. A modern combination cardboard-making machine	83
2. The calculation of pressure surges in pipelines	89
3. Turbine governing mechanism for remote-controlled water power plant Buchs-Altendorf	99
4. Refrigeration in the fruit juice industry	102
5. The refrigerating plant for the restaurant of the «Grands Magasins Du Printemps» in Paris	112
6. The refrigerating plant for the sanatorium «Du Midi» in Davos-Platz	119
7. Stodola Festival Book	129

AGENTS FOR UNITED STATES
THE NATIONAL POWER MACHINERY CORP.
2912 CHANIN BLDG., NEW YORK

Digitized by Google

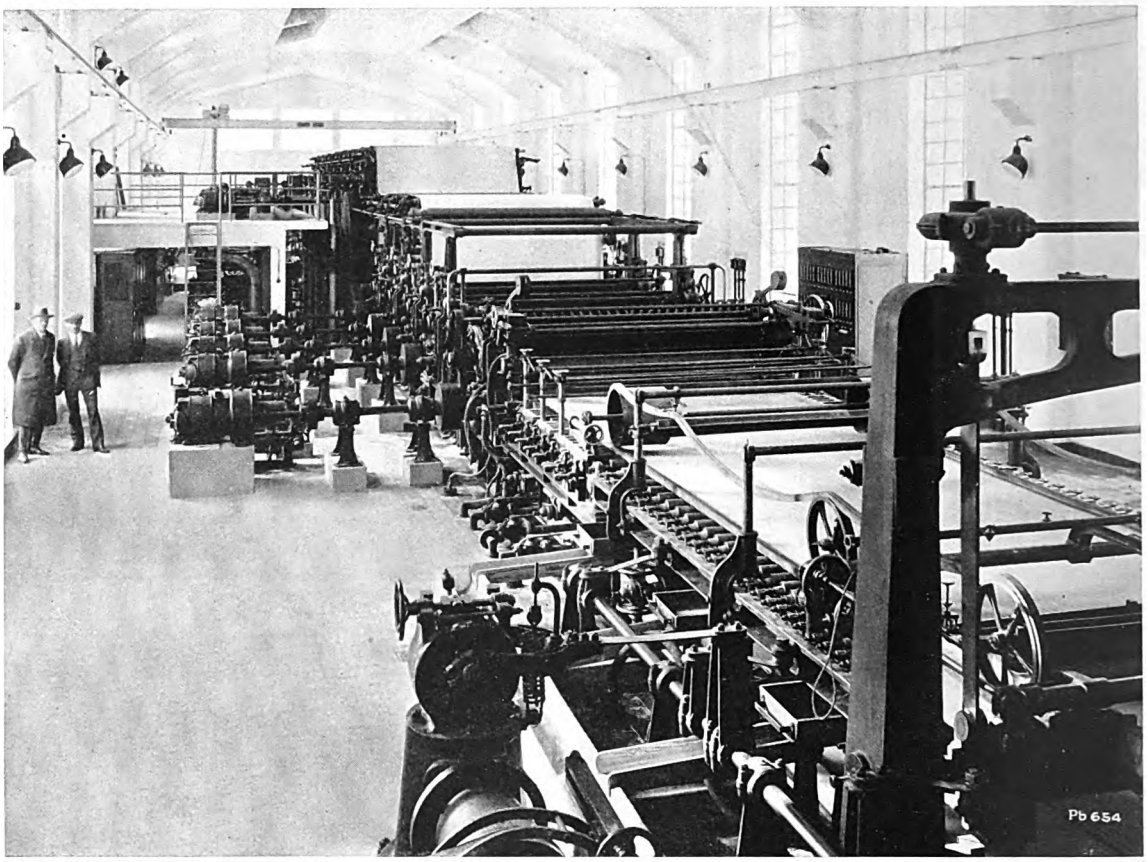

FINE PAPER MACHINE

equipped with all modern improvements

for the production of

finest papers containing little or no wood pulp.

Siemens-Harland individual drive.

Designed and built by Messrs. ESCHER WYSS & CO.

Digitized by Google

ESCHER WYSS NEWS

PUBLISHED BY MESSRS. ESCHER WYSS & Co. S. A.

VOLUME 2 — No. 3 — MAY-JUNE 1929

The "Escher Wyss News" will be published periodically in bi-monthly issues. Reprinting of articles or illustrations appearing therein will only be permitted when source thereof is duly acknowledged. Single numbers 1/6; one year's subscription 7/6.

A modern combination cardboard-making machine.

By Otto Jung.

With the exception of paper mills manufacturing exclusively printing paper, only very few of the European paper mills are in the fortunate position of being able to manufacture the same quality of paper (special papers) the whole year round. Most of the existing mills are compelled to adapt their production to the needs of the paper consumers and of the fluctuating market. Therefore, the manufacturer in order to avoid standstills of his mill, will sometimes have to accept orders, which suit very little the general lay-out of his machines and which in most cases will leave no margin of profit. Small orders will alternate with medium size orders, each order being different as regard composition, weight and colour and the opportunity of combining several orders for the same quality of paper to form one large job keeping the mill busy for some length of time, so welcome to mill owners, will rarely occur.

In such mills with varied production, the preparatory machines and apparatus can be adjusted comparatively easily to suit the continuously varying production, but with regard to the actual paper-making machine this is possible only to a limited degree. For instance, a machine, which was originally constructed for the manufacture of fine papers, cannot be employed for the production of parchment or papers with one-side glaze. Likewise a cardboard-making machine is not suited for the manufacture of any kind of paper, nor would it be advantageous to use a machine designed for printing papers, to produce the paper required for paper bags and wrappers, without seriously affecting the economy of the plant.

The universal machine combining a number of individual machines and capable of producing all kinds of paper without exception and yet operating economically is an unsolved problem and it is up to the paper machine manufacturers to develop a machine of this kind.

Already years ago, and today to a still larger extent, engineering works receive enquiries for paper machines suitable for the production of such a wide range of papers that the designers and calculators are confronted by problems which it is impossible to solve and in many cases have to inform the prospective customer that the program he has in mind necessitates not only one, but two and even three machines of different design.

A considerable step forward in the direction of the universal machine is the combination machine allowing of 7 different combinations, illustrated in the annexed drawing No. 530 532. Although the employment of several wire parts in one machine is no novelty, the arrangement shown on the drawing certainly offers novel features for which patents have been applied for.

Credit is due to Mr. Daut, Manager of the Erste Ungarische Carton-Pappenfabrik A.-G. in Budapest, for having suggested this combination, which is proving very satisfactory in practice. The machine was put into service at the end of 1928; it has fully satisfied all expectations from the very first trial run onwards and thus bears testimony to the high reputation of Messrs. Escher Wyss & Co. as builders of high-class paper mill equipments. Appropriate modern design, the use of first class materials only

AGENTS FOR UNITED STATES
THE NATIONAL POWER MACHINERY CORP.
2012 CHANIN BLDG., NEW YORK
Digitized by Google

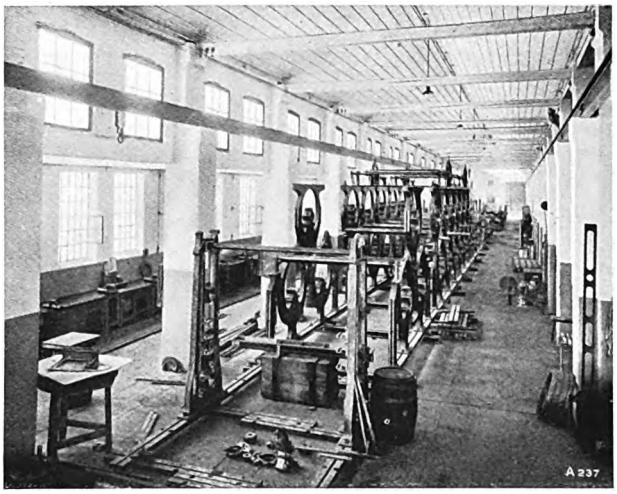

Fig. 1.

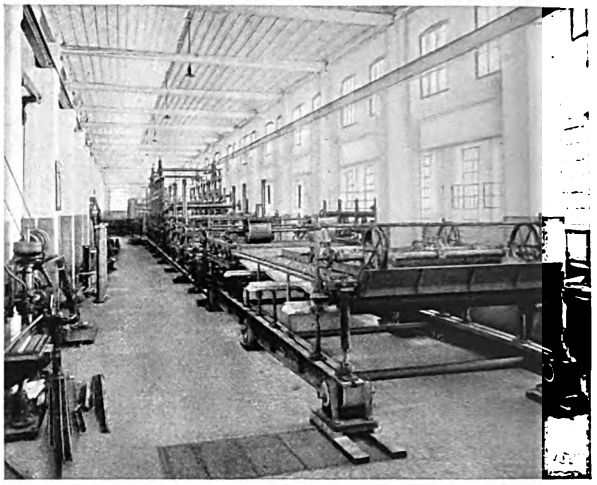

Fig. 2.

and excellent workmanship throughout have ensured the success of this machine.

The machine was designed in our Ravensburg Works (Wurttemberg) and in order to enable the makers to adhere to the exceedingly short time of delivery stipulated, executed partly in Ravensburg and partly at the works of De Pretto-Escher Wyss in Schio (Italy). Figs. 1 and 2 show part of the machine being assembled in the shops at Schio.

The employment of several cylinder moulds and of two wire tables of the Fourdrinier type and the arrangement as shown on the above mentioned drawing allows of the following combinations:

1. Lower Fourdrinier system alone, as well-known open-type Fourdrinier machine with Wandel strainer with slots of 0.018″ width, for the production of fine note paper and writing paper.
2. Upper Fourdrinier system alone, with intermediate felt and Wandel strainer with slots of 0.022″ width, for the production of wrapping papers with one-side glaze (M. G. papers) and good quality printing papers; the paper sheet passes the lower couch press and may also be conducted directly to the first wet press by shifting the intermediate felt.
3. Upper and lower Fourdrinier systems together for the production of duplex papers consisting of two kinds of stuff of different colours (if desired), whereby the lower Fourdrinier supplies the finer layer and the upper Fourdrinier that of inferior quality. Duplex heavy papers and cement bag papers of great resistance may also be manufactured with this combination. For this purpose one of the Fourdriniers is shaken only slightly or not at all in order to ensure the longitudinal deposit of the stuff fibres, whilst the other Fourdrinier requires violent shaking to ensure the transversal deposit of the fibres.
4. Cylinder moulds alone with intermediate felt and Wandel strainer with slots of 0.022″ width, for the manufacture of cardboards with one-side or two-side glaze. As with combination 2, the lower Fourdrinier couch press may be employed to increase the pressure. It is also possible to extend the intermediate felt so that the web is delivered to the first wet felt.
5. Cylinder moulds separately for the manufacture of medium heavy duplex board, or two-coloured cardboards, whereby the first two moulds receive the stuff of inferior quality, whilst the third mould receives the stuff conducted through the upper strainer with slots of 0.018″ width.
6. Cylinder moulds and one Fourdrinier part (either the top or the bottom one), for the production of heavy duplex, or two-coloured cardboards.
7. Cylinder moulds and two Fourdriniers, for the manufacture of one-coloured or two-coloured triplex boards.

In the following we give a detailed description of the machine and its parts.

The stuff discharged from the beaters can as desired be distributed into four agitator chests of

Digitized by Google

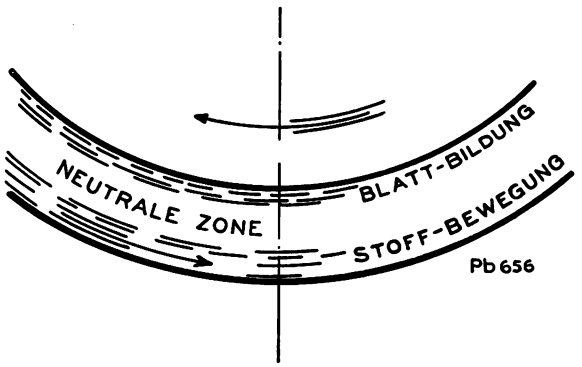

Fig. 3.

Neutrale Zone = neutral zone; Blatt-Bildung = formation of web; Stoff-Bewegung = movement of stuff.

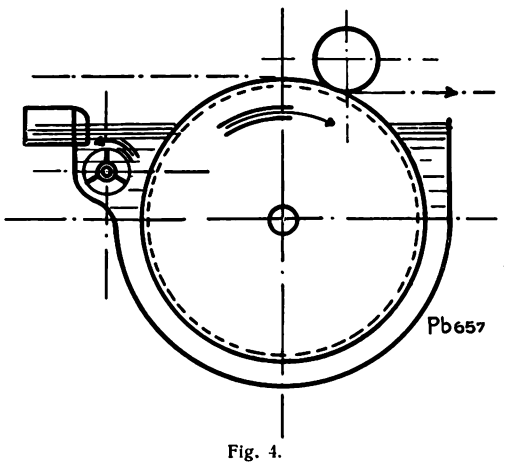

Fig. 4.

160″ length and 104″ width, driven by worm gears; these chests can be interconnected by means of gates. Three of the stuff chests are equipped with bucket wheels, whilst the stuff of the fourth chest is forced to the upper part by means of a double-acting plunger pump and diluted with the required quantity of make-up water in a mixing chest of approved design situated before the sand table. The stuff raised from the first three stuff chests by means of the bucket wheel flows through the well-known regulating gates into appropriate distributing troughs and after having been diluted with back water, passes by way of a sand table of 80 sq. ft. surface to that wire part for which the stuff is destined. A strainer with a corresponding slot width as indicated above serves for removing the knots and lumps.

Special attention had to be paid to the cylinder moulds in order to ensure uniform production of the web at the high working speed of 165 feet per minute. The free cylinder moulds of 50″ diameter and 77″ length, running in ball bearings, are for this reason fitted with round bars, and with a layer of thick round brass wire wound round these bars and carrying the lower and upper wire cloths. The spikes of the inner cylinder discs are so designed that the back water inside the cylinder is not set in motion, as it would seriously affect the absorbing capacity of the moulding cylinder. The mould troughs, which work on the counterflow principle, are so designed that there is a sufficient distance from the surface of the cylinder to the inner surface of the trough so that the inflowing stuff does not destroy the layer of stuff being formed on the moulding cylinder, Fig. 3.

A novel feature of the stuff chests suggested by the mill engineer Mr. Leckscheidt and for which a patent has been applied for is shown on Fig. 4. It consists of an agitator arranged in the intake, and driven in the direction of the flow of the stuff by means of a chain from the lineshafting. Revolving at a speed suited to the velocity of the stuff, the agitator ensures an intensive distribution of the stuff and a uniform absorption by the mould cylinder. In fact the output of the cylinder is considerably enhanced by the addition of this agitator.

Large rubber-lined rolls, which are elastically supported by means of an ingenious spring pressure device, and which can easily be lifted when changing the felt, convey the web from the cylinder on to the pick-up felt. As the web leaves the last moulding cylinder it is met by a supporting felt which helps to convey the paper sheet, formed on 3 moulding cylinders over a suction box, 4 preliminary presses and through the couch press, provided after the cylinder moulds. The endless felts are cleaned in water boxes fitted with felt whippers and in a felt washing apparatus.

As the web leaves the couch press an intermediate felt, which can be independently adjusted, takes over the transport of the paper sheet and delivers it to the third suction box of the lower Fourdrinier part. A large dandy roll flattens out the sheet on the wire and the fourth suction box if necessary extracts the remaining water from the sheet.

The two Fourdrinier parts, each fitted with an endless wire of 60 feet length and 4 suction boxes of 12.5″ width connected to a three-cylinder plunger pump are of standard design and need, therefore, no further description. That the lower Fourdrinier system is mounted on very strong beams, which may be raised or lowered by means of a winch to

Digitized by Google

give the wire part a greater or lesser incline or decline according to requirements, is a precautionary measure, which though being desirable when working according to combination 1, is by no means an absolute necessity.

Whilst the lower roll of the cylinder moulds couch press requires a rubber lining, both rolls of the two Fourdrinier systems are lined with copper. Brushes and a Kittner doctor roll look after the cleaning of the upper jackets and flexible systems of levers and weights and parallel lifting devices ensure uniform pressure of the rolls of the three couch presses.

When operating according to the combinations 2, 3, 6 and 7, an easily adjustable transporting felt conveys the paper sheet of the upper Fourdrinier system to the lower wire part. As chiefly only thin layers leave the upper part, it is not necessary to operate the last of the lower suction boxes. The couching together of the two sheets according to combination 3, or 6, or of the three webs according to combination 7, is effected in a satisfactory manner by means of the lower Fourdrinier couch press, whereby it must, however, not be overlooked that for combination 7 the cylinder moulds web has to be worked with a corresponding moisture content. Contrary to the arrangement adopted by other engineering works of carrying the upper Fourdrinier system right down to the lower wire part, we have preferred adopting an intermediate felt. Firstly, the felt is much cheaper than the extended wire, secondly, the lower wire part is not endangered by a paper «broke» occurring in the upper couch press, and thirdly, the shifting of the point of delivery before or after the lower Fourdrinier couch press is less troublesome.

The arrangement of the three wire parts as described above, and their performance according to the different combinations necessitates strict separation of the various back waters. Thus three back water pumps, direct-coupled to electric motors, deliver the back water into reservoirs from which the necessary make-up water may be drawn according to requirements. The remaining waste water is conducted through a channel to a «save-all». There are ample possibilities of utilizing the recovered pulp when operating according to one of the combinations 5, 6 and 7, whilst the fibre-free back water may be used for filling the beaters where the central layer is prepared.

The press part embodies the customary two wet presses and one reversing press with amply dimensioned lower rubber-covered roll and upper stone roll, elastic lever weighting and parallel lifting mechanism. Provision has been made for fitting of a felt washing equipment for the first wet felt at a later date and the connecting beam passing over the presses allows of adding at any time upper felts to the wet press No. I and No. II. In case of need, a combination 8 could even be created by including the upper roll of the lower Fourdrinier couch press in the upper felt of wet press No. I and thus forming an automatic pick-up for tissue papers and other thin papers. The upper press rolls are supported in such a manner that the felt can be easily inserted.

A feltless offset press of the same design as the wet presses serves for the partial removal of the felt marks.

The drying part comprises 12 paper drying cylinders of 60″ diameter and 4 felt drying cylinders of 40″ diameter, all of which are provided with man holes. Scoops of approved design, covering the total width of the cylinders, remove the last trace of condensed water. The covers on the tender's side of the machine are provided with cocks for blowing-off the air before starting the machine.

In addition to the necessary adjusting and stretching mechanism, each dry felt is provided with one or two spring bearings of great elasticity, which serve to compensate the tension of the felts.

To produce chromo substitute with high glaze, a glazing cylinder of 128″ diameter is provided. A large rubber press roll with parallel raising and lever weighting mechanisms and a protecting felt complete the equipment. Three cylinder doctors, one of which is designed as water-fed polishing doctor, serve to clean the cylinder surfaces and a felt dryer of 40″ diameter extracts the water absorbed by the felt of the glazing cylinder. When manufacturing all kinds of machine-glazed or calendered papers, the press roll is lowered and the large cylinder is used as an ordinary paper drying cylinder.

A finishing press of similar design to the offset press, provided with high-grade cast-iron rolls, considerably improves the surface of the paper.

Three cylinders each of 60″ diameter form the final drying group. The upper cylinder is fitted with a press roll and has no felt.

Digitized by Google

Two lined copper cooling cylinders of 30″ diameter each extract the heat still contained in the paper and the electricity produced by friction on the copper-lined guide rolls.

To obtain the best possible glaze, the paper then passes the calender stack containing five cast-iron rolls, all of which are ground together; the three central rolls are arranged for heating by steam.

A longitudinal cutter with five pairs of slitters and a tension press are the auxiliaries of the reeling machine following on, which winds the finished product on four square reeling shafts direct-driven by large friction gears.

A Strecker precision cross cutter with automatic sheet layer, which will not be discussed in detail here, forms the final equipment of the machine, which will mainly be employed for the production of all possible kinds of cardboard. The cross cutter is so designed that the continuous paper sheet can be cut into different sizes without using the reel stack.

Apart from this, it is possible with the cross cutter to cut stock paper on reels into different sizes at a working speed of up to 165 feet per minute quite independently of the machine, for which purpose a pair of rewinding reel stacks with 3 brakable square reeling shafts are provided.

A travelling crane of about 1 ton carrying capacity facilitates the handling of the heavy paper reels.

The above description has dealt with the attendant's side of the machine and we will now add a short description of the drive side.

To begin with we may mention the steam heating equipment for the drying cylinders, through which the exhaust steam of a steam engine of 35 lbs./sq. in. pressure is conducted to the drying cylinders. The large glazing cylinder contains also a connection for live steam. This special fitting has already been described in the «Escher Wyss News» No. 4 published in July 1928. We would add that the steam pipe is extended right into the middle of the drying cylinder in order to ensure uniform heating of the cylinder surface. The trouble formerly experienced that the steam admission side of the cylinder was hotter than the opposite side has thereby been completely eliminated. Each group of cylinders is provided with a steam gauge and a precision telethermometer, and each cylinder with a steam regulating valve for exact regulation of the quantity of steam required.

The condensate, raised by the scoops mentioned above in connection with the drying cylinders, flows off through the same steam fitting. Each cylinder is equipped with its own steam trap of ample dimensions with window for observing the flow of the water. A large pipeline carries the condensate back to the boiler house. In view of the manifold applications of the combination machine, special attention had to be paid to the variable drive. Above all each individual drive requires a wide range of speed regulation in order to be able to produce any kind of cardboard or paper whatever the longitudinal expansion or shrinkage may be.

For this reason amply dimensioned worm gears with a ratio of 1 to 17 were given the preference. They are driven by cone pulleys from a high-speed line shafting. Each individual drive is disengageable by means of a friction clutch provided in the cone pulley.

The high gear ratio permits of driving all rolls direct without intermediate gears even at the lowest speed of the machine, whereby the friction losses are considerably reduced.

The high belt velocity necessitated by the worm gears results in a large saving of belts, which is increased by the use of ball bearing belt shifters.

The driving motor of 18 to 77 HP output, supplied by the A. E. G., allows of a speed variation of 1 to 9, i. e. from 170 to 1540 r. p. m. corresponding to a working speed of the machine of from 18 to 165 feet per minute.

It is beyond doubt that a worm gear or a modern bevel wheel gear running in oil and having an appropriate gear ratio can also be used for any other kind of high-speed machine unless the individual motor drive, which is being increasingly adopted nowadays, offers greater advantages in special cases.

The constant-speed line shafting, mounted high on the wall of the building, drives the two shaking mechanisms, the two 3-plunger suction pumps and the agitator mechanisms in the cylinder mould vats and in the felt washing boxes. The constant-speed motor of 19 HP output at 960 r. p. m. is erected in a side building along with the variable-speed motor.

The three Wandel strainers are individually driven by motors of 2 HP output at 1440 r. p. m.

Digitized by Google

Fig. 5 illustrates a part of the beater assembling shops in Ravensburg.

Four of the beater equipments shown are destined for the machine described above. The beater vats, each of approximately 1000 gallons content, were executed in concrete on site. With a beater roll of 52″ diameter and 44″ length and at a stuff density of 6 per cent about 500 to 550 lbs. of dry stuff can be dealt with by each beater.

Bearing in mind the manifold uses of the machine, the four beaters were provided with basalt lava bedplates in addition to knife bedplates. The exchange of the bedplates can be performed in the shortest possible time. The provision of basalt lava rolls at a later date has been duly considered when designing the beater.

Although the machine with its four beaters may be used for the production of most kinds of paper, yet the «Erste Ungarische Carton - Pappenfabriks A.-G.» in Budapest, as owners of the machine, will mainly manufacture different qualities of cardboard and thick papers of any desired composition of the stuff.

It is an indisputable success for the above-mentioned firm that the paper and cardboard produced by this new machine compared as regards quality most favourably with the products of all competing firms and will, therefore, hold its own on the world's markets.

Credit is also due to Messrs. Escher Wyss & Co. that this novel machine has worked without a hitch from the moment of starting up, which is a further proof of the firm's good reputation as paper-making machine builders.

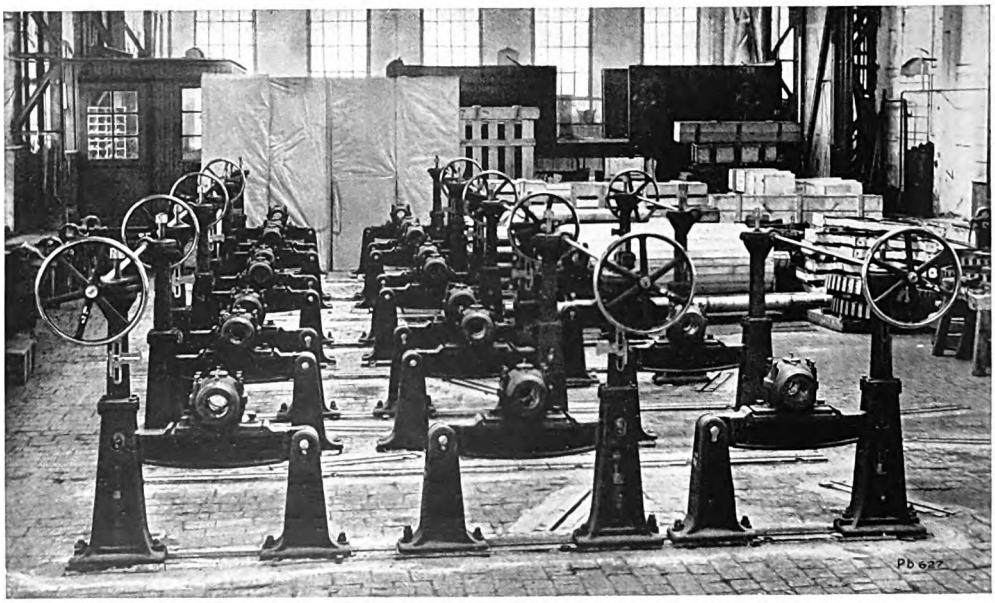

Fig. 5.

Digitized by Google

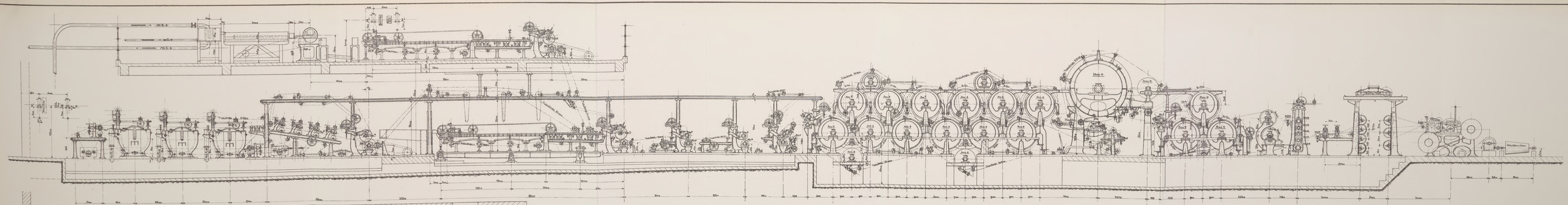

Erste ung. Cartonpappenfabrik A. G., Budafok

Construction plan of the combined cardboard-making machine No. 2

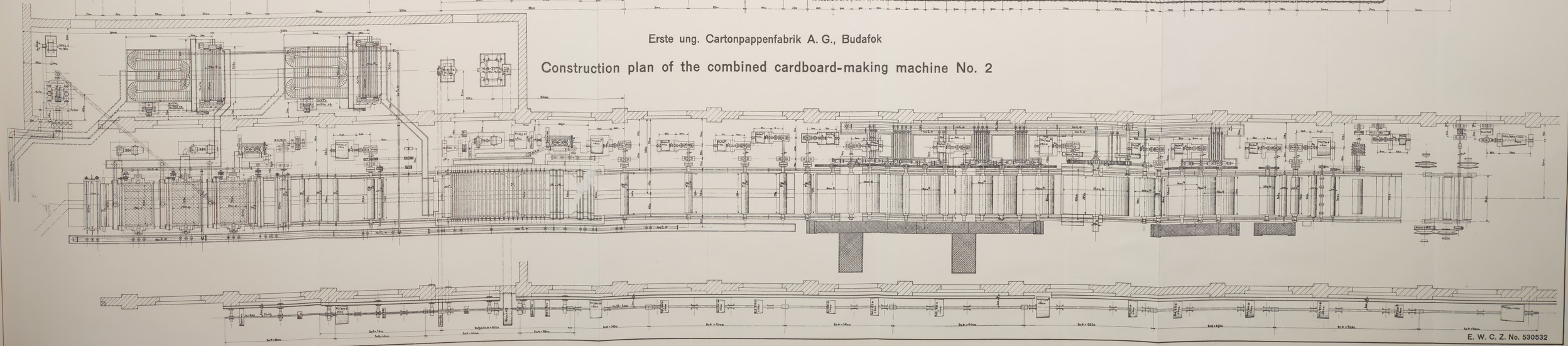

E. W. C. Z. No. 530532

O. ROHR, GRAPH. WERKSTÄTTEN ZÜRICH 1

Digitized by Google

The calculation of pressure surges in pipelines.

Communicated by our own hydraulic laboratory.

By P. de Haller.

In a former essay [1]), Mr. Herrmann pointed out the necessity of predetermining the pressure fluctuations occurring in a pipeline when regulating a turbine. We will in the following publish some details concerning the methods of calculation adopted without, however, entering into details regarding the theories propounded for the purpose. We will at the same time avail ourselves of the opportunity of referring to some important recent improvements and simplifications of the methods.

The first investigations of pressure surges were based on the assumption that water is strictly incompressible and that the pipeline is rigid. However, experience has proved that surges are of such an oscillatory nature, the character of which cannot be explained by this crude theory. One was compelled to assume that the elasticity of the pipeline and the compressibility of the water, although being small, yet play an important part. The works of Joukowski [2]) and Allievi [3]) have developed this point of view, and the problem in its final form is to determine the oscillations of a liquid contained in an elastic pipe.

For our investigation we will employ the following designations based on the metric system of weights and measures:

h = pressure in the pipeline,
V = flow velocity in the pipeline,
u = velocity in the nozzle,
D = diameter of pipeline,
d = thickness of walls of pipeline,
S = cross-section of pipeline,
s = cross-section of nozzle,
L = total length of pipeline,
x = distance of a point of the pipeline from the outlet,
x′ = distance of a point of the pipeline from the surge tank,
t = time,
T = time required for opening or closing the turbine,
a = propagation velocity of the pressure waves (surges),
y = static pressure at a point of the pipeline.

The index $_o$ designates the values of the variables during stationary conditions.

We will consider a cylindrical pipeline of constant diameter and constant thickness of walls, fed from a reservoir with constant water level, and ending with a free discharge of variable cross-section as illustrated in Fig. 1. In addition we will neglect the friction of the liquid along the walls of the pipeline.

Allievi in his first report of 1904 showed that the pressure h and the flow velocity V have a certain relation expressed by the equations:

$$h - h_o = F\left(t - \frac{x}{a}\right) + f\left(t + \frac{x}{a}\right)$$

$$V - V_o = -\frac{g}{a}\left[F\left(t - \frac{x}{a}\right) - f\left(t + \frac{x}{a}\right)\right] \quad . \quad (1)$$

wherein F and f are variable pressures dependent on t and x. t denotes the time and x the abscissa of the particular cross-section as measured from the closing organ along the pipeline axis. The function F represents a pressure surge propagated up stream with a velocity a, and function f a pressure surge propagated in the opposite direction with the same velocity. This velocity is the propagation velocity of the pressure waves, and is equal to the velocity of sound in the medium under consideration the latter consisting in this case of a water column and pipeline. In the case of a pipeline of homogeneous material its value is given by the equation.

$$a = \frac{9900}{\sqrt{48.3 + K\frac{D}{d}}}$$

wherein D is the diameter and d the thickness of the walls of the pipeline, whilst K is a coefficient, which for mild steel and steel is 0.5, and for cast-iron 1.

[1]) Escher Wyss News No. 6/1928.
[2]) Joukowski: Über den hydraulischen Stoss in Wasserleitungen, St. Petersburg 1898.
[3]) Allievi: Théorie des coups de béliers, Trad. Gaden, Dunod, Paris 1921.

Digitized by Google

Loewy[4]) in a very remarkable treatise published a short while ago has calculated this propagation velocity for various pipelines of non-homogeneous materials, such as ferro-concrete, wood and so forth.

The two equations (1) show that two systems of pressure surges exist in the pipeline, which travel in opposite directions at the velocity a without interfering with each other.

The two functions F and f are in a mathematical sense quite arbitrary. They must be determined from the limit conditions.

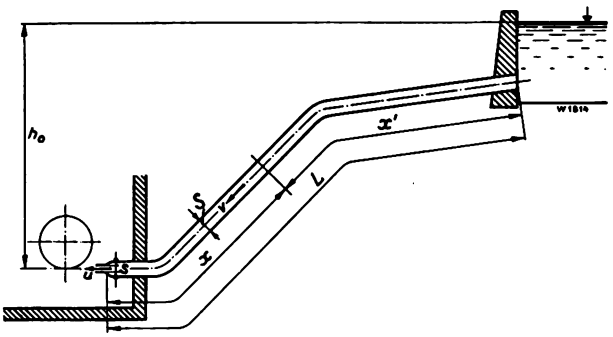

Fig. 1.

Let us now examine a pipeline, Fig. 1, which satisfies the above assumptions and which besides is horizontal. The results may then without difficulty be applied to the general case of an inclined pipeline. Let h_o and V_o be the pressure and velocity under stationary conditions. At the lower end of the pipeline, i. e. at the point with the abscissa $x = 0$, let a pressure variation Δh of short duration be initiated. This pressure variation will be propagated along the pipeline only in the direction of increasing x; the function f of equations (1) will, therefore, at first be zero. These equations thus are reduced to:

$$\Delta h = h - h_o = F\left(t - \frac{x}{a}\right)$$

$$V - V_o = -\frac{g}{a} F\left(t - \frac{x}{a}\right)$$

or

$$h - h_o = \frac{a}{g}\left(V_o - V\right) \quad . \quad . \quad . \quad (2)$$

Now if u be the free discharge velocity of the jet and ψ the ration s/S of the cross-section of the jet to the cross-section of the pipeline, then we have:

$$\frac{u^2}{2g} = h + \frac{V^2}{2g} \quad \text{and} \quad V = u \times \psi \quad . \quad . \quad . \quad (3)$$

[4]) Loewy. Druckschwankungen in Rohrleitungen, Springer, Vienna 1928.

If we eliminate V and u from these three equations, we obtain a relation between h und ψ indicating the pressure increase as a function of the opening of the valve; this opening itself is a function of time.

Let us further assume that at a point A, Fig. 2, the diameter or the thickness of the walls of the pipeline suddenly alters, i. e. that the cross-section of the pipeline changes from S_1 to S_2 and the propagation velocity from a_1 to a_2. With the index $_1$ we designate the values for the partial section OA and with index $_2$ the values of the partial section

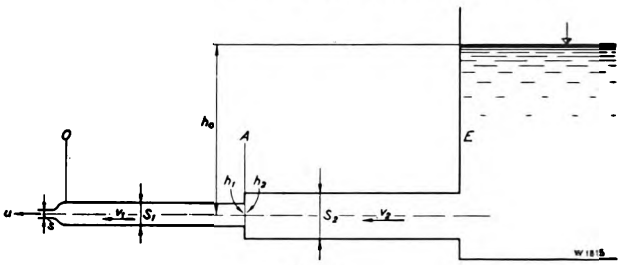

Fig. 2.

AE. The fundamental equations for each partial section then are:

$$h_1 - h_{01} = F_1 + f_1 \qquad h_2 - h_{02} = F_2 + f_2$$

$$V_1 - V_{01} = -\frac{g}{a_1}(F_1 - f_1) \qquad V_2 - V_{02} = -\frac{g}{a_2}(F_2 - f_2)$$

In the partial section AE no surge can be propagated in the direction E—A, because no disturbance has occurred at E; therefore, $f_2 = 0$. The «Bernouilli» equation gives us another relation between the pressures and velocities at point A:

$$h_{01} + \frac{V_{01}^2}{2g} = h_{02} + \frac{V_{02}^2}{2g}$$

The members $\frac{V^2}{2g}$ are generally small as compared with h and we may, therefore, neglect them. The equation then reads:

$$h_{01} = h_{02} \qquad h_1 = h_2$$

By introducing the flow equation

$$V_1 S_1 = V_2 S_2$$

we obtain the following:

$$F_2 = F_1 + f_1 \qquad \frac{S_1}{a_1}(F_1 - f_1) = \frac{S_2}{a_2} F_2$$

$$F_2 = \frac{2\,\frac{S_1}{a_1}}{\frac{S_1}{a_1} + \frac{S_2}{a_2}} \times F_1 = \sigma F_1 \qquad F_1 = \frac{\frac{S_1}{a_1} - \frac{S_2}{a_2}}{\frac{S_1}{a_1} + \frac{S_2}{a_2}} \times F_1 = \tau F_1 \quad . \quad . \quad . \quad (4)$$

We see that a fraction σ of the pressure surge F_1 is propagated in the section AE; another fraction

Digitized by Google

τ is reflected back to the end of the pipeline. τ is the reflection coefficient and σ the coefficient giving the proportion of pressure propagated onwards.

In the special case where S_2 is very large, σ becomes $= 0$ and τ becomes $= -1$. The surge F_1 is completely reflected and alters its sign without, however, altering its intensity. This happens in the surge chamber.

If, on the other hand, S_2 is very small or even zero, then $\tau = +1$; the surge F_1 is completely reflected and does not alter its sign.

Let us now examine the discharge opening. A pressure surge f propagated down stream will also be reflected, but the discharge velocity is no longer independent of the pressure. The former equations (4) are no longer applicable. For this case we have:

$$V = \sqrt{2gh} \times \frac{s}{S} \qquad \frac{s}{S} = \psi$$

and the two fundamental equations:

$$h - h_o = F + f \qquad V - V_o = -\frac{g}{a}(F - f)$$

If we eliminate h and solve the equations for F, we obtain the following:

$$F = \left(f + \frac{a^2\psi^2}{g} + \frac{a V_o}{g}\right) \pm \sqrt{\left(f + \frac{a^2\psi^2}{g} + \frac{a V_o}{g}\right)^2 + f\left(2\frac{a^2\psi^2}{g} - 2\frac{a V_o}{g} - f\right)} \quad \ldots . \quad (5)$$

This equation tells us that the absolute value of F is always $\leq$ f, but its sign may be equal or opposite, or zero.

In short, an adjustment of the valve causes a variation of the pressure in the pipeline, the intensity of which pressure may be calculated with the aid of equations (2), (3) and (4). This variation of pressure is propagated up stream with the velocity a, and does not change its value. At each alteration of the pipeline diameter, the pressure surge is partly propagated and partly reflected. Each F-wave (surge) is completely reflected in the surge chamber and, therefore, changes its sign. Each f-wave reaching the valve is partly reflected there and superimposes itself on a direct wave created in the moment the valve is adjusted.

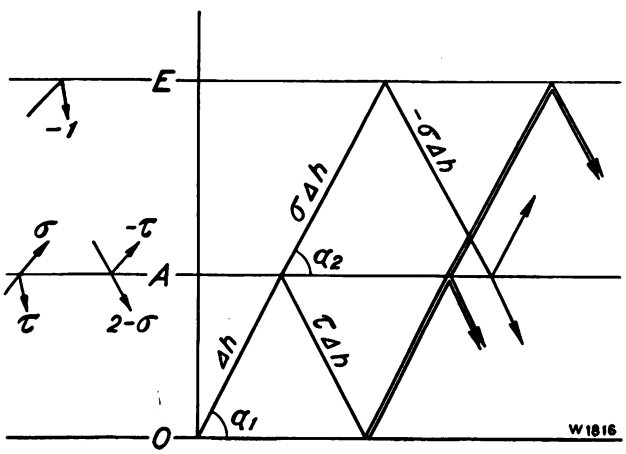

Fig. 3.

The pressure at any instant and at any point is then determined by the superimposition of all direct and all reflected waves. The following diagram will render this process more comprehensible:

In the diagram, Fig. 3, the distances x are ordinates and the horizontal straight lines denote the ends and the cross-section variations of the pipeline. Time is the abscissa. A wave leaving its point of origin at the time $t = 0$, is represented by a straight line, whose inclination is proportional to the propagation velocity a_1. In the cross-section A this wave divides; one part of it continues its path towards E with a velocity a_2, whilst the other part is reflected to the point of origin and is there again reflected. The intensity of the pressure wave is indicated by the letters adjacent to the respective lines; the different reflection and propagation coefficients are diagrammatically shown on the margin.

Thus the problem is solved in general. We have made no special assumptions in regard to the regulating process or the design of the pipeline excepting that the latter consists of cylindrical pipe sections, each of constant diameter. The only difficulty lies in the intricate relations of the individually simple phenomena. By introducing two further assumptions, which, however, are only very approximately realized, we can considerably simplify the calculation.

The first assumption is to consider the diameter and the thickness of the walls of the pipeline to be constant throughout the entire length. In that case a is also constant and the only reflecting cross-section is the upper end of the pipeline. It is then possible to adopt a method of calculation, which was developed by Allievi in 1913 and which is a considerable simplification compared with the original Allievi theory of 1904.

Digitized by Google

We will again use the first fundamental equation:

$$h - h_o = F\left(t - \frac{x}{a}\right) + f\left(t + \frac{x}{a}\right)$$

If $x = L$, then $h = h_o =$ constant. Therefore,

$$f\left(t + \frac{L}{a}\right) = -F\left(t - \frac{L}{a}\right)$$

or:

$$f\left(t + \frac{x}{a}\right) = -F\left(t + \frac{x}{a} - \frac{2L}{a}\right) = -F\left(t - \frac{x}{a} - \frac{2(L-x)}{a}\right) \quad \ldots \quad (6)$$

In other words, the value of f at any section of abscissa x and at any time t is equal but opposite to the value, which F had at the same point but $\frac{2(L-x)}{a}$ seconds earlier. Especially at the point of origin $x = 0$, the function f has the equal but opposite value, which F had at that point $\frac{2L}{a}$ seconds earlier. This value $\mu = \frac{2L}{a}$ is called the duration of the phase.

Let us now investigate the pressure surge exclusively at the valve, where $x = 0$, starting from stationary conditions characterized by h_o, V_o and s. We will give the values of the variables observed at the times

$$t_1,\ t_1 + \mu,\ t_1 + 2\mu,\ t_1 + 3\mu,\ \ldots\ldots$$

the indices 1, 2 and 3; $t = 0$ denotes the beginning of the valve adjustment and t_1 any moment during the first phase, i. e. between 0 und μ.

Equation (6) then reads:

$$f_n = -F_{n-1}$$

and we can write the following series of equations:

$$h_1 - h_o = F_1 \qquad V_1 - V_o = -\frac{g}{a}F_1$$

$$h_2 - h_o = F_2 - F_1 \qquad V_2 - V_o = -\frac{g}{a}(F_2 + F_1)$$

$$h_3 - h_o = F_3 - F_2 \qquad V_3 - V_o = -\frac{g}{a}(F_3 + F_2)$$

$$\ldots\ldots\ldots\ldots\ldots$$

From these equations we eliminate the F, then:

$$h_1 - h_o = \frac{a}{g}(V_o - V_1)$$

$$h_1 + h_2 - 2h_o = \frac{a}{g}(V_1 - V_2)$$

$$h_2 + h_3 - 2h_o = \frac{a}{g}(V_2 - V_3)$$

$$\ldots\ldots\ldots\ldots\ldots$$

These equations are supplemented by the discharge equation

$$u = \sqrt{2gh}$$

and the flow equation

$$u \times s = V \times S$$

wherein s = cross-section of nozzle,
S = cross-section of pipeline,
u = free jet velocity,
V = velocity in the pipeline.

In addition we will introduce the non-dimensional values: *)

$$\eta_i = \frac{S_i}{S_o} \qquad \varrho = \frac{a \times V_o}{2gh_o} \qquad \zeta^2 = \frac{h_i}{h_o}$$

After performing the necessary calculations, our system of equations becomes:

$$\left.\begin{aligned}
\zeta_1^2 - 1 &= 2\varrho\,[1 - \eta_1\,\zeta_1] && \text{a)}\\
\zeta_1^2 + \zeta_2^2 - 2 &= 2\varrho\,[\eta_1\,\zeta_1 - \eta_2\,\zeta_2] && \text{b)}\\
\zeta_2^2 + \zeta_3^2 - 2 &= 2\varrho\,[\eta_2\,\zeta_2 - \eta_3\,\zeta_3] && \text{c)}\\
&\ldots\ldots\ldots\ldots\ldots\ldots\\
\zeta_{i-1}^2 + \zeta_i^2 - 2 &= 2\varrho\,[\eta_{i-1}\,\zeta_{i-1} - \eta_i\,\zeta_i] && \text{i)}
\end{aligned}\right\} \text{(I)}$$

One fact is at once conspicuous, viz: the series of the consecutive values $\zeta_1, \zeta_2 \ldots \zeta_i$ only depends on the initial conditions and on the position of the closing valve at the moments t_1, $t_1 + \mu$, $t_1 + 2\mu$, $t_1 + 3\mu, \ldots$, but is quite independent of the position of the valve or of the amount of pressure in the intermediate instants.

Equation a) permits of calculating the pressure surge at any moment during the first phase when the law for adjusting the valve is stated, whilst the equation series (I) allows of performing this calculation for the corresponding moments of the following phases.

An analysis of these equations shows us that the pressure curve plotted as a function of time generally evinces acute angles for $t = 0,\ \mu,\ 2\mu, \ldots\ldots$ This curve at the points of total phase, therefore, has the form of a broken line.

We will now further assume a linear closing law governing the closing of the valve. In this case

$\eta = 1 - \frac{t}{T}$, wherein T = time required for clos-

*) These important non-dimensional values were introduced by F. Braun some years before Allievi in a treatise published in 1913.

Digitized by Google

ing from fully open position and if we adopt μ as unit of time, then we have:

$$\eta_i = 1 - \frac{i}{\Theta} \qquad \Theta = \frac{T}{\mu}$$

The equations (I) prove that ζ, i. e. the pressure surge at the valve, only depends on ϱ and θ. Every time that ϱ and θ acquire the same values, the equations will also be the same. The whole process

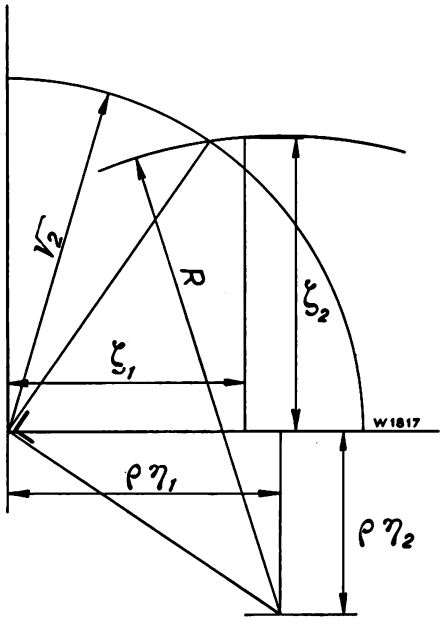

Fig. 4.

of the pressure surge at its origin is governed solely by the two non-dimensional parameters:

$$\varrho = \frac{a \times V_o}{2\, g h_o} \qquad \Theta = \frac{a \times T}{2\, L}$$

which Allievi calls the characteristics of the pipeline.

Any value occurring in the calculation of the pressure surge, for instance the maximum of ζ^2, is a function of the two characteristics ϱ and θ. We obtain a calculating table of this function by plotting the line ζ^2_{max} = constant in a system of right-angled coordinates ϱ and θ.

Another representation is arrived at by the graphic solution of the equation series (I). The general i-equation may therein be written:

$$(\zeta_{i-1} - \varrho\eta_{i-1})^2 + (\zeta_i + \varrho\eta_i)^2 = \varrho^2\,\eta^2_{i-1} + \varrho^2\,\eta^2_i + 2$$

Now this is simply the equation of a circle with the centre $(+\,\varrho\eta_{i-1}, -\,\varrho\eta_i)$ and the radius $\sqrt{\varrho^2\,\eta^2_{i-1} + \varrho^2\,\eta^2_i + 2}$, Fig. 4. This representation is especially useful for the study of the resonance between the natural oscillations of the pipeline and the oscillations of the governor, which we will, however, not discuss here.

The following general laws may be deduced from the fundamental equation system (I), whereby linear closing of the valve is assumed:

With increasing t, ζ approaches a limit value ζ_l provided always that the process is of sufficient duration.

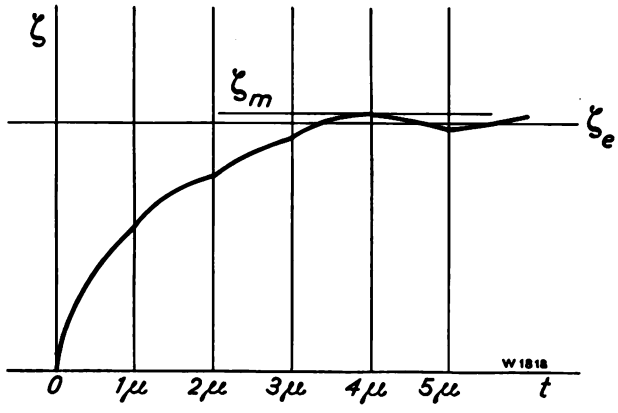

Fig. 5.

Evidently this limit value is such that

$$\zeta_{i-1} = \zeta_i = \zeta_l \qquad i \rightarrowtail \infty$$

and because

$$\eta_{i-1} - \eta_i = 1/\Theta$$

ζ_l becomes a root of

$$\zeta_l^2 - \frac{\varrho}{\Theta}\,\zeta_l - 1 = 0 \quad . \quad . \quad . \quad . \quad . \quad (7)$$

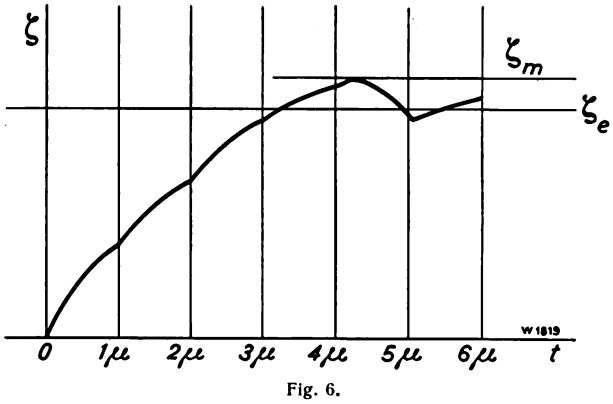

Fig. 6.

The law according to which ζ^2 varies with the time, is given in Fig. 5. The time is plotted as abscissa and $\zeta^2 = \frac{h}{h_o}$ as ordinate. t_1 here is the terminal point of the first phase and the ζ_l refer

Digitized by Google

to the ends of the phases with equal index. We see that ζ_i at first remains below ζ_l, then passes beyond it and finally approaches it again under oscillations. The surpassing can take place in any phase, but will always occur if the process lasts long enough.

The maximum ζ_i for a given ρ and θ is the first ζ_i passing beyond ζ_l. If this surpassing takes place after a sufficiently large number of phases, the maximum ζ_i practically coincides with ζ_l. It can also happen that the maximum is reached in an instant between the t_i, Fig. 6.

It is interesting that the limit value ζ_l only depends on the ratio $\frac{\varrho}{\Theta} = \frac{V_o\, L}{g h_o\, T}$, which does not explicitly embody a. But a characterizes the elasticity of the pipeline. The limit value of the pressure surge would, therefore, be the same as in a rigid pipeline. The elasticity only alters the manner in which this limit value is reached, but not its amount.

The above remarks apply equally well to the opining as to the closing of the value, departing from a stationary condition characterized by h_o, V_o and s_o. The linear opening law is:

$$\eta_i = 1 + \frac{i}{\Theta}$$

wherein θ indicates the time required for doubling the original discharge cross-section; this interval of time is measured by the number of phases. The limit value of the pressure is a root of the equation

$$\zeta_l^2 + \frac{\varrho}{\Theta}\,\zeta_l - 1 = 0 \quad . \quad . \quad . \quad . \quad (8)$$

If, however, when starting up, we begin with a completely closed valve, then $V_o = 0$, $s_o = 0$, $\rho = 0$ and $\eta = \infty$, which is impossible. To evade this difficulty, the following values are introduced:

V^* = stationary velocity at the discharge opening at end of opening manœuvre,

T^* = Duration of opening manœuvre in seconds,

s^* = Discharge opening at end of opening manœuvre.

Then we have:

$$\varrho = \frac{aV^*}{2gh_o} \qquad \theta = \frac{aT^*}{2\,L} \qquad \eta = \frac{s}{s^*}$$

The fundamental equation system thus acquires the form:

$$\zeta_1^2 - 1 = -\,2\varrho\eta_1\,\zeta_1$$

$$\zeta_1^2 + \zeta_2^2 - 2 = 2\varrho\,[\eta_1\zeta_1 - \eta_2\zeta_2]$$

. . . . . (II)

and the linear opening law is:

$$\eta_i = \frac{i}{\Theta}$$

The following general laws may be deduced therefrom:

During the whole duration of the opening manœuvre ζ_2 remains smaller than 1 and approaches the limit value ζ_l resulting from the equation

$$\zeta_l^2 + \frac{\varrho}{\Theta}\,\zeta_l - 1 = 0 \quad . \quad . \quad . \quad . \quad (9)$$

The greatest depression always occurs at the end of the first phase; its value is a root of the equation

$$\zeta_m^2 + 2\,\frac{\varrho}{\Theta}\,\zeta_m - 1 = 0 \quad . \quad . \quad (10)$$

When the valve stops after an opening or closing manœuvre, the pipeline is not in a state of hydrodynamic equilibrium. It will, therefore, of necessity tend towards a state of equilibrium, which is determined by the final degree of opening. This transitory stage is called the counter-surge.

As η is constant, the fundamental equations acquire the following form:

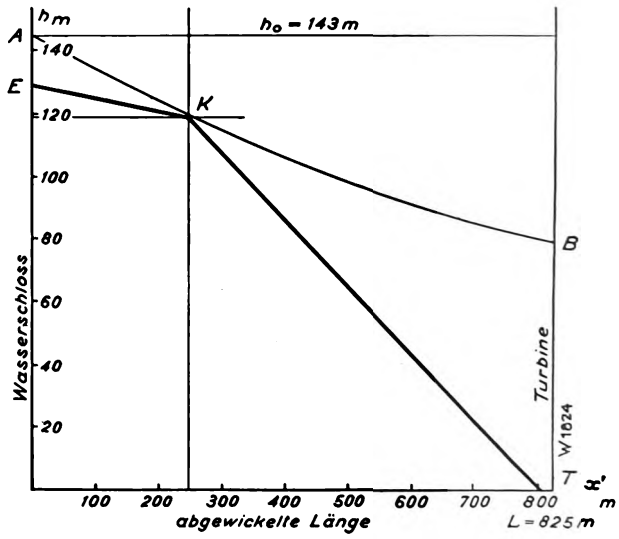

Fig. 8
Wasserschloss = surge chamber; abgewickelte Länge m = length in metres.

Digitized by Google

$$\overline{\zeta}^2 + \zeta_1^2 - 2 = 2\,\varrho\overline{\eta}\,[\overline{\zeta} - \zeta_1]$$

$$\zeta_1^2 + \zeta_2^2 - 2 = 2\,\varrho\overline{\eta}\,[\zeta_1 - \zeta_2]$$

. . . . . (III)

wherein $\overline{\zeta}$ and $\overline{\eta}$ imply the values ζ and η at the moment where the valve ceases to move. The limit value of this series is $\zeta = 1$, as may be easily ascertained.

Two cases must hereby be distinguished:

1. The pressure approaches the value 1 asymptotically and without oscillations.
2. The pressure exceeds this value in the first phase after the valve is closed and then approaches it in damped oscillations.

If the valve was completely closed, a return to stationary conditions is impossible because $\overline{\eta}$ becomes zero, the equations are reduced to

$$\overline{\zeta}^2 + \zeta_1^2 - 2 = 0$$

$$\zeta_1^2 + \zeta_2^2 - 2 = 0$$

and the pressure, therefore, permanently fluctuates between $\overline{\zeta}^2$ and $2 - \overline{\zeta}^2$.

A remarkable case is the counter-surge ensuing after an opening manœuvre. The first equation of the system (III) shows us that if $\zeta < 1$, ζ_1 can only be > 1 if the condition

$$2\,\rho\eta - (\zeta - 1) < 0$$

is satisfied. From this may be deduced that a pressure counter-surge can only set in after an opening manœuvre when $\rho < 1$. This pressure increase, however, hardly exceeds 20 per cent in actually executed pipelines.

Fig. 7 illustrates the general form of the opening and closing surge for two different pipelines, the first of which is designed for a relatively high head ($\rho < 1$), and the other for a medium head ($\rho > 1$).

If a pipeline in its upper part contains a section with slight inclination, the pressure in that section when opening the turbines must be investigated, as it may happen that the depression exceeds the static pressure y at certain points of such section when the opening surge sets in. The pipeline is then subject to the external atmospheric pressure and in danger of collapsing.

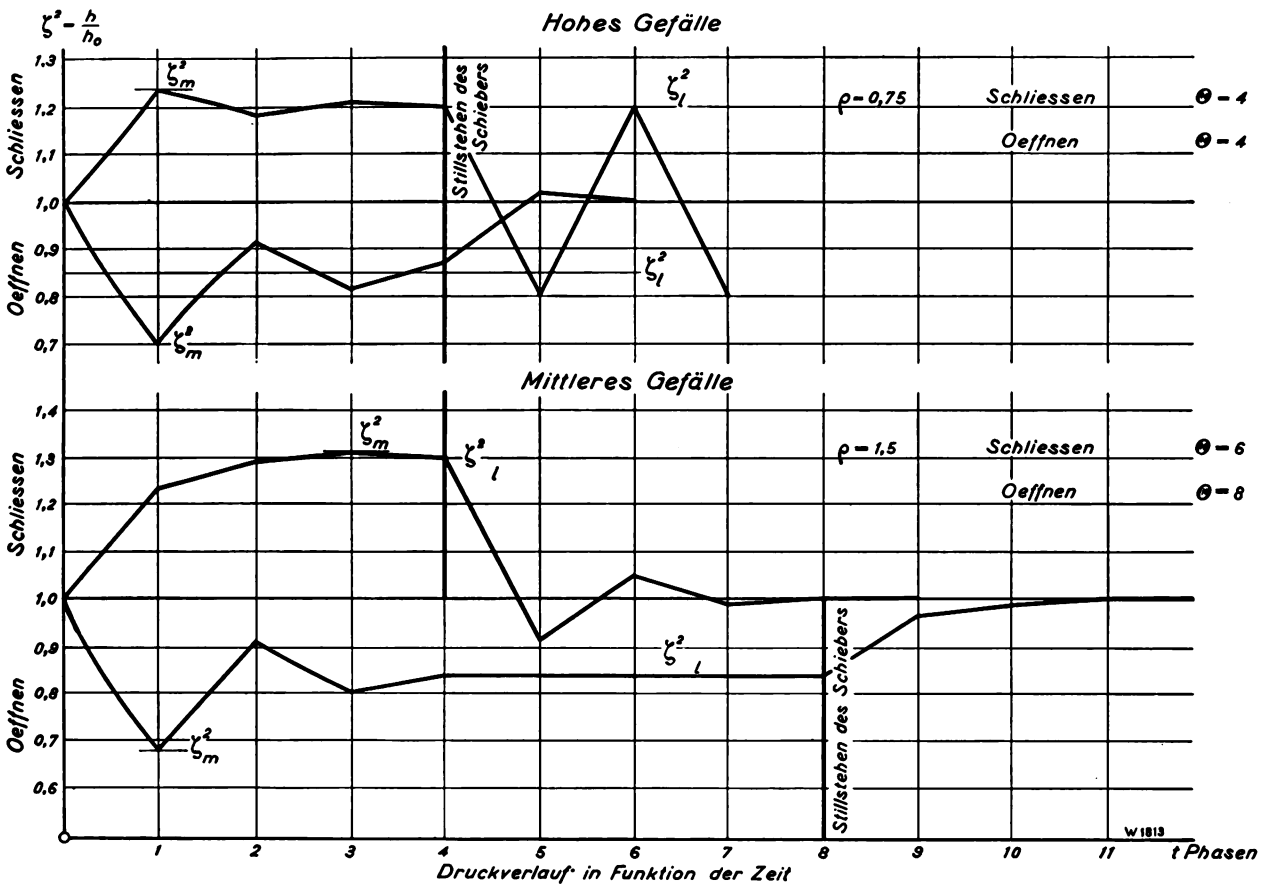

Fig. 7.

Hohes Gefälle = high head; Mittleres Gefälle = medium head; Oeffnen = open; Schliessen = close; Stillstehen des Schiebers = standstill of valve; Phasen = phases; Druckverlauf in Funktion der Zeit = pressure as a function of time.

Digitized by Google

The maximum depression at any point of the pipeline occurs in the moment when the first wave reflected by the surge tank arrives at this point. This wave reaches the cross-section with the abscissa x in the time $t = \frac{2L - x}{a}$; in this moment the pressure is the same as prevailed originally $\frac{2x}{a}$ seconds earlier, i. e. at the time $\frac{2(L-x)}{a} = \frac{2x'}{a}$. The ζ -value corresponding to the pressure is given by the equation:

$$\zeta_k^2 + 2\,\frac{\varrho}{\Theta}\,\frac{x'}{L}\,\zeta_k - 1 = 0$$

which is plotted in the calculating table, Fig. 14.

The pressure to which point K of the pipeline is subject is then:

$$h_k = y - \zeta_k^2\, h_o$$

and this must always be positive:

$$\zeta_k^2 < \frac{y}{h_o}$$

This short survey of Allievi's theory shows us that most of the pressure surge problems may be solved with the aid of this theory if the assumptions upon which it bases are sufficiently closely fulfilled.

The greatest deviations are due to the fact that actual pipelines almost always consist of various sections, having different diameters and different thickness of walls. At the beginning of this article we showed how an exact calculation may be made. In practice it suffices to employ the Allievi theory and to introduce mean values for D and d; likewise a mean value of V_o is used for the calculation of ρ. This procedure ensures fairly good coincidence between the calculation and the test results, especially as far as the maximum values of the pressure surge are concerned, and that is the most important point for the practical engineer.

Example:

Given:

$h_1 = 143$ m L = 825 m D = 2.9 m
d = 19 mm $Q_{max} = 18.5$ m³/sec. per turbine

Two turbines are connected to the pipeline, therefore, the total quantity of water at full admission is 37 m³/sec.

Time required for closing 23 secs.
Time required for opening 11 secs.
Propagation velocity: see Fig. 9.

$\frac{D}{d} = 153$ a = 890 m/sec.

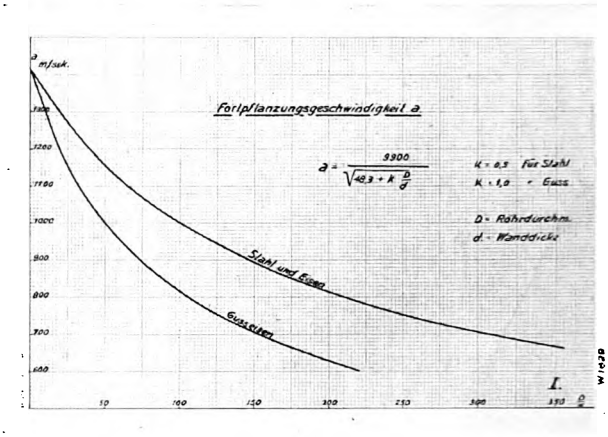

Fig. 9.
Fortpflanzungsgeschwindigkeit = propagation velocity; Rohrdurchm. = diam. of pipe; Wanddicke = thickness of walls; Stahl und Eisen = steel and iron; Gusseisen = cast iron.

Duration of the phase $\mu = \frac{2 \times L}{a} = \frac{2 \times 825}{890} = 1.85$ sec.

a) Simultaneous closing of two machines:

$Q = 37$ m³/sec. $V_o = \frac{Q}{\pi/4 D^2} = 5.6$ m/sec. T = 23 sec.

$\rho = \frac{a\,V_o}{2g\,h_o} = \frac{890 \times 5{,}6}{2g \times 143} = 1.78$ $\theta = \frac{T}{\mu} = \frac{23}{1.85} = 12.4$

The diagram III, Fig. 10, gives the maximum pressure at the turbine, which can occur under these operating conditions:

$$\zeta^2_{max} = \frac{h_{max}}{h_o} = 1.155$$

indicating a rise of pressure of 15.5 per cent of the head h_o.

b) Closing of one turbine; the other remaining in service.

In this case the quantity of water is reduced to one half in 23 seconds; the time required for closing to be employed for the calculation, therefore, is $2 \times 23 = 46$ secs.

θ is $\frac{46}{1.85} = 24.8$, whilst V_o and ρ have remained as before.

This θ -value is not contained in the diagram III, which only embodies the usual times required for closing. As, however, this closing time of 46 seconds is comparatively high for this head, equation (7) giving the limit pressure ζ_l^2 may be used straight away:

$$\zeta_l^2 - \frac{1{,}78}{24{,}8}\,\zeta_l - 1 = 0 \quad \zeta_l = 1.036 \quad \zeta_l^2 = \frac{h_l}{h_o} = 1.073$$

The rise of pressure $\triangle$ h is, therefore, 7.3 per cent.

c) Opening one turbine, when the other is already in service:

T = 11 secs. $V_o = \frac{18.5}{6.6} = 2.8$ m/sec.

$\rho = \frac{890 \times 2{,}8}{2g \times 143} = 0{,}89$ $\theta = \frac{11}{1{,}85} = 5.95$

Digitized by Google

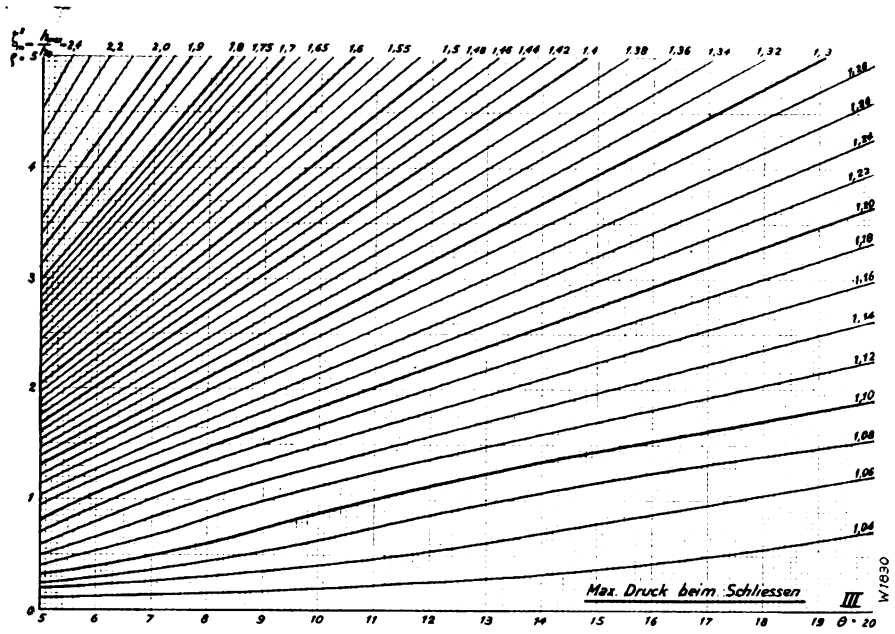

Fig. 10.
Max. Druck beim Schliessen = maximum pressure when closing.

According to table V, Fig. 12, the lowest pressure at the turbine is:

$\zeta^2_{min} = 0.86$ Drop of pressure = 14 per cent.

d) Simultaneous starting up of both turbines:

$T^* = 11$ secs. $V^* = 5.6$ m/sec.

$$\rho = \frac{890 \times 5.6}{2\ g \times 143} = 1.78 \quad \theta = \frac{11}{1.85} = 5.95$$

Table VI (or equation 10) gives us:

$$\zeta^2_{min} = \frac{h_{min}}{h_o} = 0.55$$

the maximum drop of pressure is, therefore, 45 per cent.

In addition we will determine the pressure drop curve representing the smallest possible pressure for any point of the pipeline. This is best done

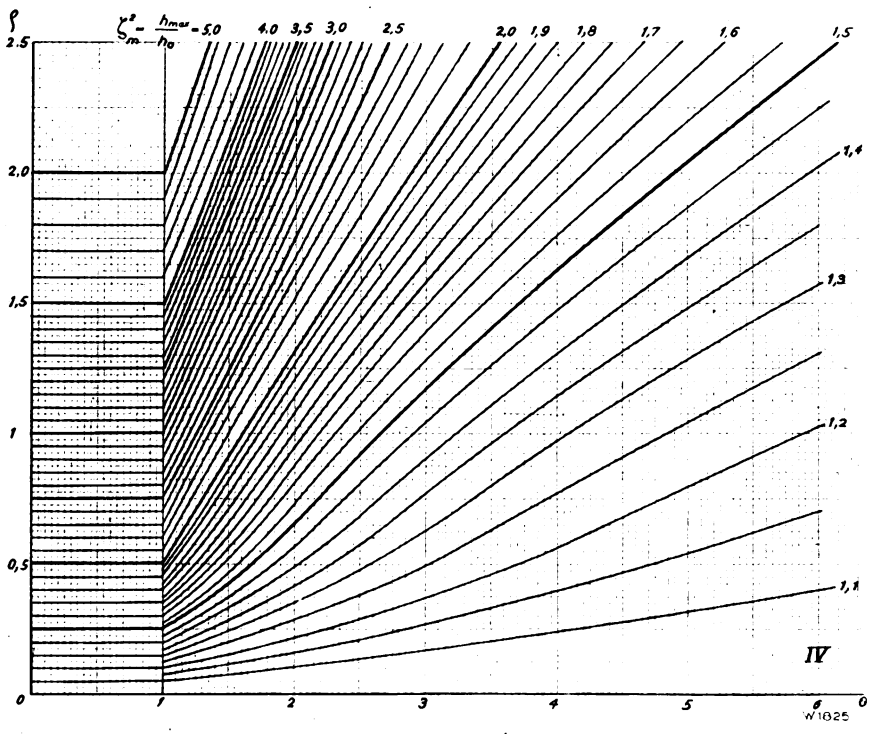

Fig. 11. Maximum pressure when closing (ϱ and ϑ small).

Digitized by Google

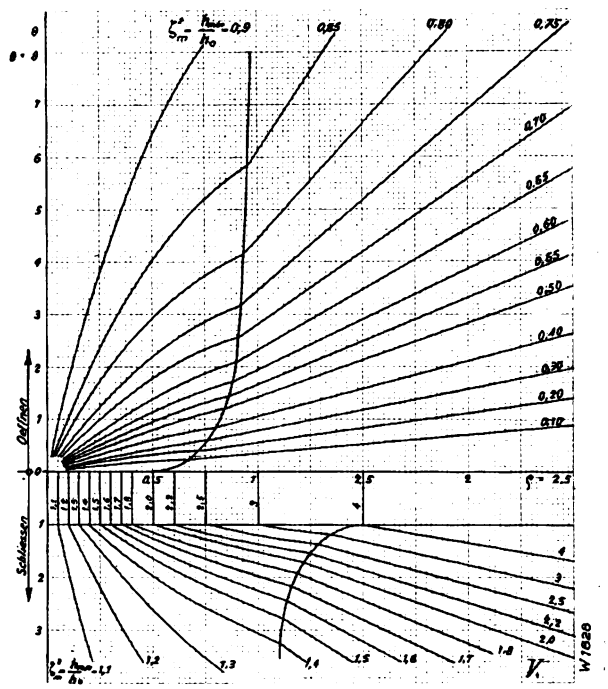

Fig. 12.
Oeffnen = open; Schliessen = close.

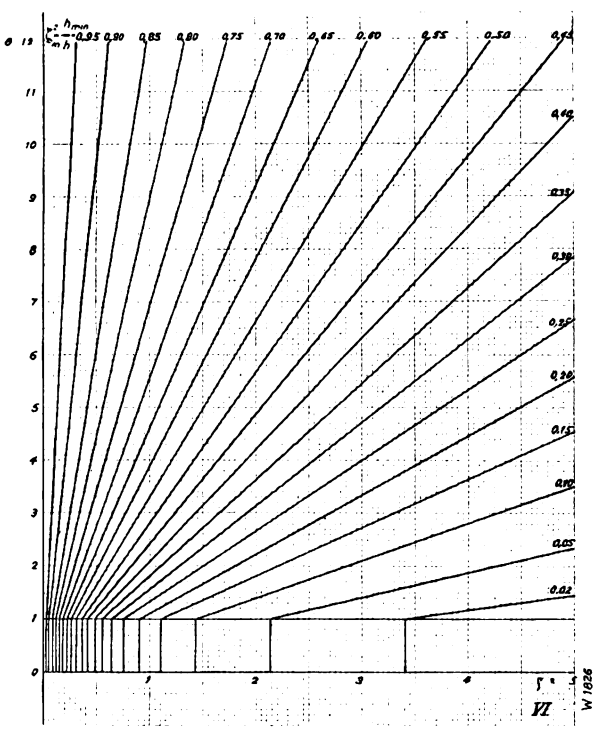

Fig. 13.

with the aid of the table, Fig. 14, which for $\frac{\varrho}{\Theta} = \frac{1.78}{5.95} = 0.298$ gives the following values:

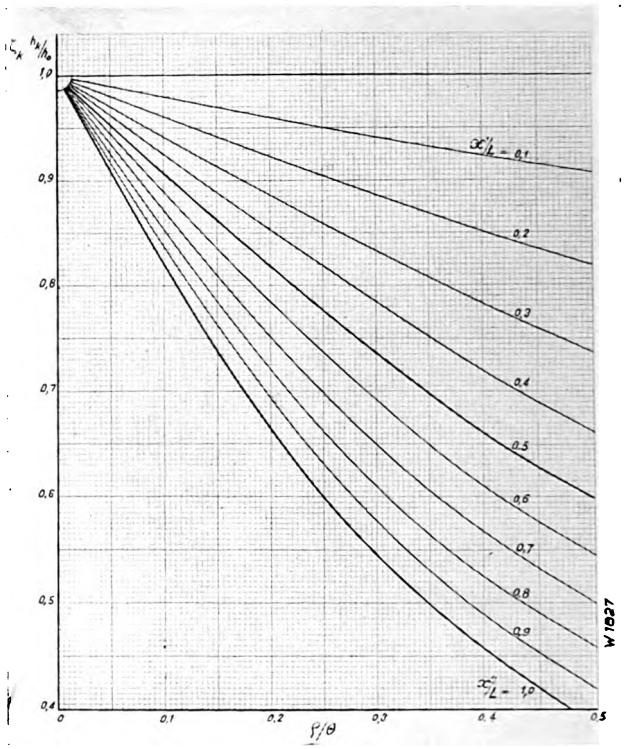

Fig. 14.

x'	$\frac{x'}{L}$	$\frac{h}{h_o}$	h
0	0	1	143 m
82.5 m	0.1	0.942	134.8 m
165 m	0.2	0.886	126.7 m
247.5 m	0.3	0.834	120.6 m
—	—	—	—
825 m	1	0.55	78.7 m

This pressure drop curve AB may be plotted in Fig. 8. If EKT represents the profile of the pipeline, we see that at the bend K no vacuum prevails and the indicated time of opening is, therefore, admissible.

Literature Reference.

1. Allievi-Dubs: Allgemeine Theorie über die veränderliche Bewegung des Wassers in Rohrleitungen, Springer, Berlin, 1909.
2. Allievi: Théorie du coups de bélier. Traduction Gaden, Dunod, Paris, 1921.
3. E. Braun: Bemerkungen zur Allievi'schen Theorie der Druckschwankungen in Rohrleitungen. Die Turbine, Vol. 1909, pages 81, 347, 405.
4. Loewy: Druckschwankungen in Rohrleitungen. Springer, Vienna, 1928.
5. Jouguet, Rateau, de Sparre: Etude théorique et expérimentale du coups de bélier. Dunod, Paris, 1917.
6. Camichel, Eydoux, Gariel: Etude théorique et expérimentale du coups de bélier. Dunod, Paris, 1919.

Digitized by Google

Turbine governing mechanism for remote-controlled water power plant installed at Buchs-Altendorf.

By Eugen Rinderknecht.

The borough of Buchs in the St. Galle Rhine Valley a short while ago supplemented its water power plant with a new station at Altendorf, equipped with one machine, which in several respects is of special interest. For definite reasons the plant was designed for automatic operation and in view of the local conditions it was decided to perform the starting up, paralleling and shutting down of th turbine by attendants constantly on duty at the main station situated a quarter of an hour's walk distant. For this purpose the two stations were linked up by the necessary control leads. The new station contains a Pelton turbine, which under a net head of 1470 feet utilises 33 gallons per second of water and thereby has a maximum output of 898 HP. The turbine is directly coupled with a three-phase Brown Boveri generator running at 1000 r. p. m.

The turbine is regulated by a so-called double regulation, i. e. both the jet deflector and the needle are controlled, whereby on a sudden heavy decrease in load the deflector first of all deflects the jet from the runner wheel, whereupon the needle is so slowly closed that no undue pressure surges can take place in the pipeline.

Compared with single regulation, this double regulation designed for automatic operation presents considerable difficulties resulting in interesting constructions, especially when the oil pump of the governor is not driven by an independent electric motor, but by the turbine itself. In the latter case there is initially no oil pressure available for the operation of the governor. Therefore, provisions have to be made so that after opening the inlet valve of the turbine, the deflector is automatically sufficiently withdrawn from the jet and the nozzle opened simultaneously to allow enough water to pass for starting the turbine. Thereupon oil pressure is produced in the governor, and the further operations are performed in the usual manner. The apparatus required for this purpose is described hereunder and a short description of the performance of starting and stopping is also given.

The turbine speed is controlled by a universal oil - pressure governor type F 25, with actuator type 25, whose design and performance has been described in a number of publications. *) The servomotor of the governor is so designed that the water pressure from the turbine is admitted to the small cylinder 102, seen in Fig. 1, and continually tends to turn the main regulating shaft 105 in the direction for closing. This force is counteracted by the oil-pressure in the opening cylinder 103, the amount of pressure being adjusted by the control piston 129 operated from the pendulum 4 by the control levers in the well-known manner. This arrangement offers the advantage, so important for automatic plants, that when the oil-pressure fails, for instance in consequence of the belt driving the oil pump from the turbine shaft falling off the pulley, the turbine is automatically stopped.

Now, in order to be able to start up the turbine in spite of the permanent action of the water pressure in cylinder 102 and before oil pressure is available for cylinder 103, a special starting device with cylinder 90 and change-over valve 91 is provided. Space 92 of cylinder 90 communicates with the bore of valve 91 through a duct 93. The bore of valve 91 is in turn connected with the inlet water pipe to the turbine by means of pipe 94. The connection between pipe 94 and cylinder 92 is opened according to requirements by the valve pin 95. This pin is retained in its upper position by the action of the spring on piston 96 so long as no oil pressure prevails on top of the piston 96.

The main regulating lever 51 is operated from the main regulating shaft 105 by means of the connecting rod 50. The jet deflector 52 is directly con-

*) Schweiz. Bauzeitung, Vol. 89, No. 13 of March 26 th, 1927.
Wasserkraft und Wasserwirtschaft 1928, No. 1.
Escher Wyss News 1928, No. 5.

Digitized by Google

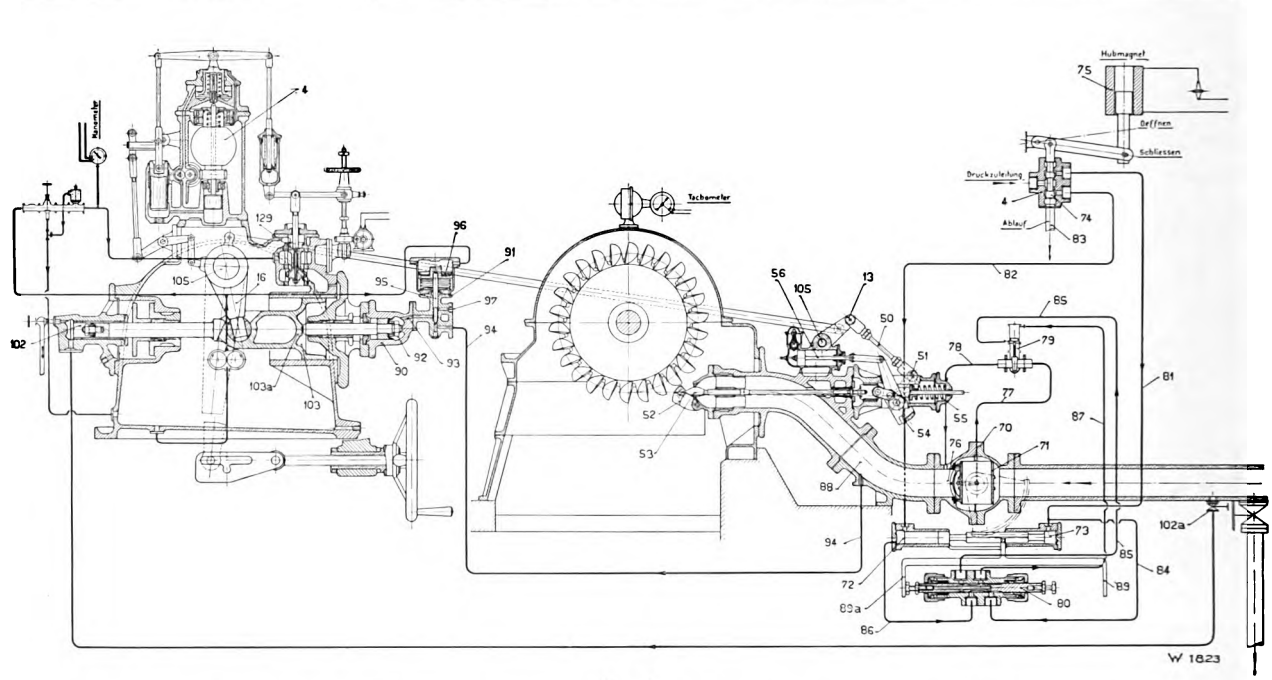

Fig. 1.
Hubmagnet = lifting magnet; Oeffnen = open; Schliessen = close; Druckzuleitung = pressure admission; Ablauf = discharge.

nected with the main regulating lever 51 by means of a special driving mechanism, whilst the needle 53 is positively connected with the main lever 51 only through the stops 54. The spring 55 acting on the needle bar permanently tends to close the needle, whereby the closing velocity is limited by the cataract 56.

The water supply to the turbine is cut off by the rotary valve of the well-known Escher Wyss design provided between the pipeline and the turbine inlet. The casing 70 of this valve contains the rotary body 71 with sealing disc, which is moved by an hydraulic servomotor with closing cylinder 72 and opening cylinder 73 operated by water under pressure from the turbine pipeline. This servomotor is influenced by the control piston 74, which in turn is controlled by the electromagnet 75 via a system of levers.

The space 76 in front of the sealing disc of the valve is connected with the inlet water pipe to the turbine every time the valve is closed or opened so that the sealing disc is relieved whilst turning the valve. The relieving piston 79, positively operated by the reversing piston 80, serves to open and close the relieving pipeline 77/78.

Assuming that valve 102a through which the water cylinder 102 is put under pressure, and likewise the pressure pipe to the control piston 74 is permanently open, the starting up of the plant is performed in the following manner.

The electromagnet 75 is energized by the attendant in the main station and it then raises the control piston 4; the opening cylinder 73 of the rotary valve is thereby connected with the pressure pipeline by way of pipe 81, whilst the closing cylinder 72 is simultaneously connected with the discharge 83 through the pipe 82. In the position of the change-over valve 80 indicated in the drawing, the pipe 85 leading to the opening servomotor of the relief valve 79 is simultaneously put under pressure through pipe 84, and pipe 87 leading to the closing servomotor of the relief valve connected with cylinder 72, i. e. likewise with the discharge via pipe 86. The movement of the control valve 74 has, therefore, simultaneously adjusted the servomotors of the main stop valve and relief valve in the manner necessary for opening; the relief valve thereby opens and the main valve follows as soon as the sealing disc is sufficiently relieved. In consequence thereof the full water pressure is admitted to the turbine inlet tube 88 and is transmitted to the starting piston 92 through pipe 94 and the still open valve 91. This piston moves to the left until it reaches the stop 103a of the governor servomotor piston. As the bore of cylinder 92 is larger than that of cylinder 102, the servomotor piston of the governor is pushed along by the starting piston until the latter has reached the end of its travel. In this position the jet deflector is so far withdrawn from the jet and the needle so far opened

Digitized by Google

that the turbine can start. After the lapse of a few seconds, the oil pump 16, driven from the turbine shaft, produces oil pressure, which is transmitted to the space above piston 96 of the reversing valve 91. Consequently valve pin 95 moves downwards and closes the connection between pipe 94 and cylinder 92. The water under pressure still contained in the latter can escape through the discharge opening 97 provided with a diaphragm, whereby the pressure is released from cylinder 92. The governor is then able to operate with oil pressure and the speed may be synchronized by the attendant in the main station by influencing the electric speed-adjusting device. Hereby a certain initial position of the speed-adjusting device is tried, at which the machine, as soon as oil pressure prevails in the governor, is at once set to the correct no-load admission.

How perfectly this device operates is shown by the starting curve recorded during a test, illustrated in Fig. 2. As may be seen, the turbine commences to run 5 seconds after the control magnet for the

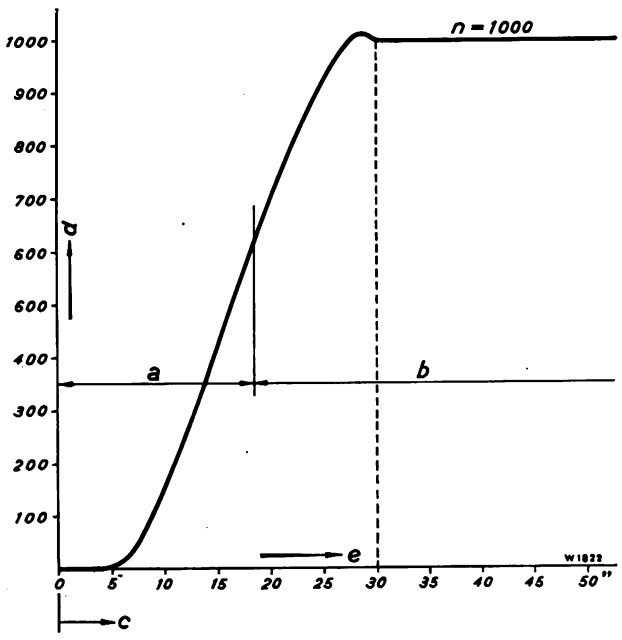

Fig. 2. Starting curve.

a = Observed values.
b = Values recorded by tachograph.

rotary valve has been energized and after the lapse of 30 seconds has attained its constant normal speed. Synchronizing and paralleling is then performed by the machinist in the main station, whereupon the load is taken over by correspondingly adjusting the speed-adjusting device.

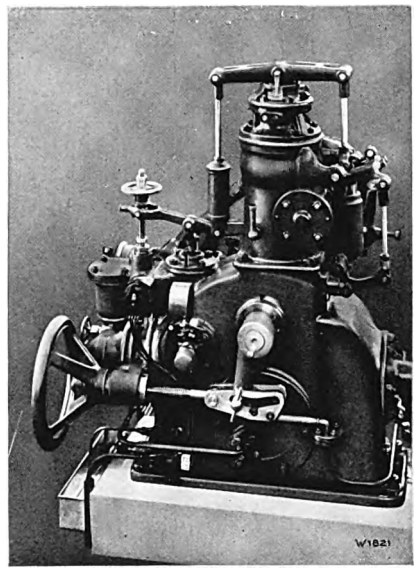

Fig. 3.

The rotary valve on commencing to open forces the reversing valve 80 to the left, which causes the relief valve 79 to close.

The plant is shut down by switching off the electromagnet 75. The control piston 74 thereby moves downwards and the relief valve is again opened, whilst the servomotor 72/73 of the main valve is influenced in such a manner as to close it.

The rotary element 71 closes and on reaching its final position reverses the reversing valve 80 by means of the stop 89a, whereupon the relief valve 79 is also closed. The turbine, therefore, is relieved of pressure and stops, whereby the servo-

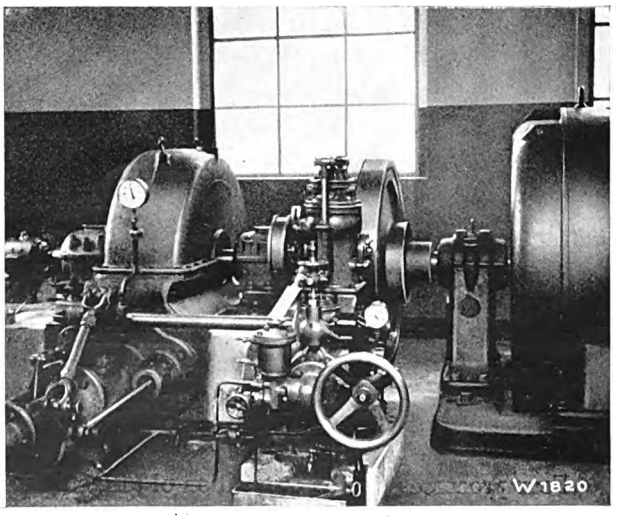

Fig. 4.

Digitized by Google

motor of the governor is set in the position for completely closing down the turbine by the water pressure prevailing in cylinder 102.

The plant is equipped with all apparatus required for automatic control, amongst which may be mentioned a contact tachometer, which switches off the electromagnet of the rotary valve control gear as soon as the maximum permissible speed is exceeded and thereby shuts down the turbine.

Figs. 3 and 4 are views of the governor and the turbine; to the left of Fig. 4 is seen the control valve with the electromagnet.

Refrigeration in the fruit juice industry.

By D. Mettler.

1. General remarks regarding the storage of fruit juice.

The tendency to restrict and battle against excessive consumption of alcohol, noticeable in all civilized countries, has of late years brought about a considerable change in the beverage industry. The best and most promising means to attain this goal is undoubtedly the prodution of beverages free from alcohol or such containing very little alcohol. The fact that alcoholic beverages were widely consumed in the past is explained by their nature. It is common knowledge that every fruit juice commences to ferment at normal air temperatures, due to the presence of yeast fungi, which are transferred to the fruits by the air and by insects already during the period of ripening. The greater part of the fruit sugar is thereby consumed by these small creatures and turned into alcohol and carbonic acid. The alcohol produced gradually kills these ferments and they precipitate in the beverage as sediment, the alcohol at the same time acting as preservative for the beverage. The process of fermentation is accompanied by a considerable production of heat. The decomposition of the sugar just mentioned may be obviated by various artificial means, with the exact investigation of which many State Institutes and scientists are occupied.

Four processes for the prevention of fermentation, which are already practicable, may be mentioned:

1. Pasteurizing by heating the fruit juice to about 170° F.
2. Sterilizing by addition of benzoate of sodium or other preparations (chemical process).
3. Filtration and sterilizing by mechanical means.
4. Cooling to from 30° to 28° Fahr.

With the first two processes, the ferments are either rendered harmless or killed; with the third process, the germs are removed from the juice by means of a special filter.

With the fourth process, the germs are neither removed from the juice nor are they killed. As a result of the low temperature only the development of the germs is rendered impossible and fermentation thus prevented so long as the beverage is exposed to the low temperature. However, as soon as the temperature of the juice is raised to from 32° Fahr. up to 35° Fahr., the fermentation process commences and the development of germs increases with increasing temperature. Sometimes fermentation sets in at even lower temperatures. With this process the fruit juices leaving the fruit press retain their original composition and, therefore, do not lose their flavour during the period of cold storage. If one tastes fruit juices stored in this manner one is under the impression that they are

Digitized by Google

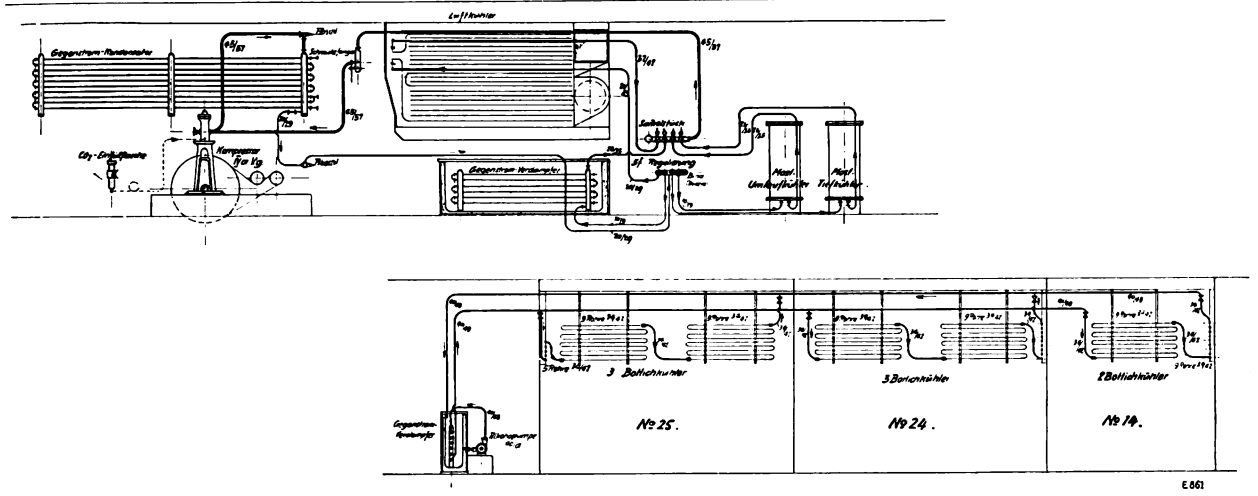

Fig. 1. Diagrammatic sketch of the refrigerating equipment.
CO_2 Einfüllflasche = CO_2 flask; Most Umlaufkühler = juice circulating cooler; Most Tiefkühler = juice cooler; Gegenstrom Kondensator = counterflow condenser; Luftkühler = air cooler; Schmutzfänger = dirt trap; Gegenstrom-Verdampfer = counterflow evaporator; Botticlikühler — vat cooler; Alkoholpumpe = alcohol pump; Regulierung = rugulation.

enjoying freshly pressed juice, which at the same time is distinguishable by its clearness. The maximum temperature at which all fermentation ceases is, however, also dependent on the condition and purity of the beverage. By increasing the purity of the fruit juice, the preserving temperature may be raised. Naturally the individual juice producers are at liberty to submit the juice to a special treatment in accordance with their own experience.

2. Ideal equipment of a cold storage plant for fruit juice.

Where the space conditions permit the fruit juice storage cellars are generally arranged underground in order to be able to maintain a uniform temperature, whereby in Switzerland, for instance, mean cellar temperatures of from 54° to 63° Fahr. are obtained according to the local conditions and prevailing weather conditions. The amount of heat radiated is generally very small in such cellars since the surrounding strata of soil have even a lower temperature and, therefore, only the radiation from the roof and from the walls projecting above the ground need be considered as regards rise in temperature. The conditions, however, are widely different for the actual cold storage, with which at the necessary low temperatures of 30° to 28° Fahr. very considerable radiation of heat from the surrounding surfaces occurs, which must be reduced as far as possible by artificial means. To render such localities fit for the purpose they are to serve, the cellars must above all be made proof against moisture penetrating from outside. To attain this end, the surrounding well-dried surfaces are coated with cork plates or other moisture-proof insulating material. Care must be taken that no moisture can penetrate into the insulating mass after it has been laid, as this would seriously diminish its insulating capacity.

In addition to the above-mentioned heat radiation, a further small amount due to the illumination and the attendants must be considered in the calculations.

The fruit juice storage vessels in the cellars should be placed at a distance of from 4″ to 5″ from the walls, or even at a greater distance, so as to prevent direct radiation into the storage vessels from outside. The fresh fruit juice, immediately after being pressed, is filled into receptacles, and after mixing, is thence conducted to a refrigerator and finally reaches the storage barrels with a temperature of from 30° to 28° Fahr. At this low temperature fermentation ceases completely and heat cannot be developed. In such plants a so-called air cooler is provided for the purpose of carrying off the radiated heat and any other accumulation of heat and at the same time to purify the air in the cooling room and to uniformly distribute the cold air.

As a rule special concrete vats, lined with glass according to the Borsari system, or with Mammoth, or recently also enamelled steel vats, are used as storage vats.

With exception of the two tapping points, generally made of tinned bronze, the fruit juice nowhere comes in contact with metal, which might easily affect the taste of the juice. These tappings may equally well be made of enamel.

Digitized by Google

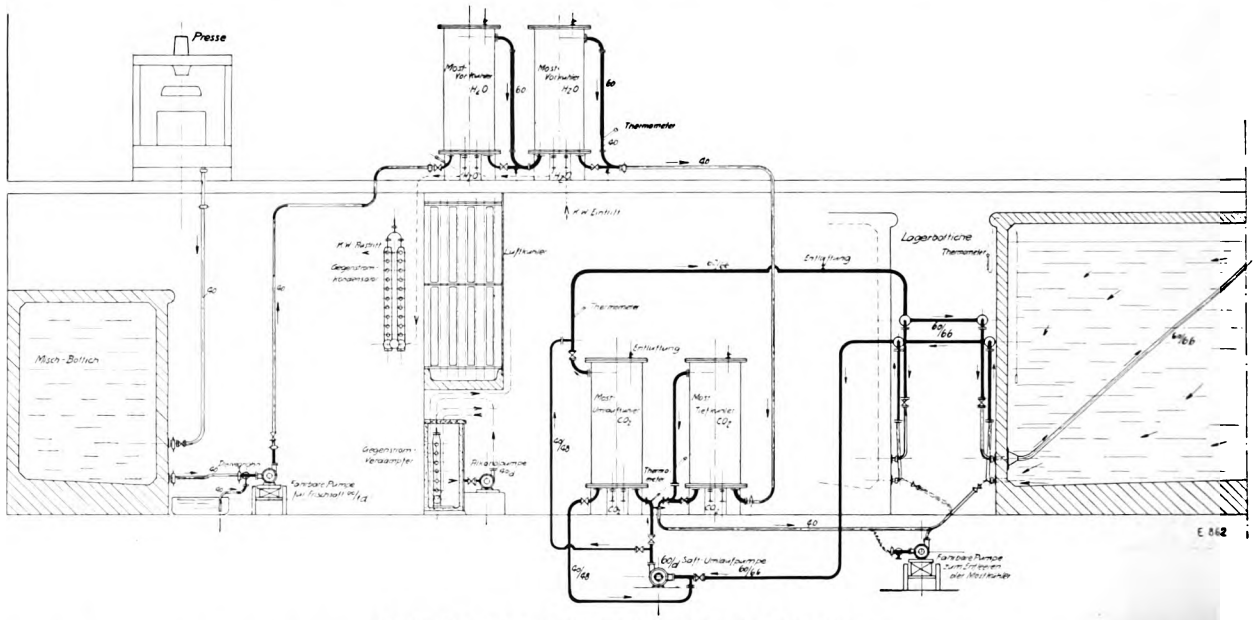

Fig. 2. Diagrammatic sketch of the fruit juice circulation.
Presse = fruit press; Most Vorkühler = preliminary juice cooler; K. W. Eintritt = cooling water inlet; K. W. Austritt = cooling water outlet; Misch-Bottich = mixing vat; Dreiwegbahn = 3-way cock; Fahrbare Pumpe für Frischsaft = portable pump for fresh juice; Saft-Umlaufpumpe = juice circulating pump; Lagerbottiche = storage vats; Fahrbare Pumpe zum Entleeren der Mostkühler = portable pump for discharging juice coolers.

In the manner described above and by means of indirect cooling, the fresh fruit juice may be stored at a relatively small expense in an absolutely unaltered condition until it is consumed, or until the next fruit harvest, or even longer.

The cold storage of the fruit juice does not materially affect its price, so that the instalment of a modern refrigerating plant is warranted under all circumstances, especially when considering the great advantages derived from such a plant.

To give our readers some idea of the costs involved, we publish the following example based on the conditions in Switzerland.

A cellar of about 965 sq. ft. ground area and 16.5 ft. height suffices for the storage of about 44 445 gallons of sweet juice. The initial cost of the refrigerating plant is as follows:

Plastering and insulating work for an existing cellar	£	440.0.0.
Water supply and electric current connections	„	80.0.0.
Costs of the refrigerating equipment .	„	720.0.0.
Total outlay for new cold storage plant	£	1240.0.0.

Approximate running expenses for a storage period of 150 days:

Redemption of capital investment 10 %	£	124.0.0
Electric current at 0.96 d. per kilowatt = 60 kW. × 0.96 d. × 150 days .	„	36.0.0.
Water expenses at the rate of 0.0272 d. per cub. ft. = 1060 cub. ft. × 0.0272 d. × 150 days	„	18.0.0.
Diverse unforeseen expenses	„	8.0.0.
Total expenses for 150 days including cooling of 44 445 gallons of juice from 68° Fahr. to 28° Fahr . . .	£	186.0.0.

The price increase for the cold storage of one gallon of fruit juice thus amounts to

$$\frac{£\ 186 \times 240\ \text{d.}}{44445} = 1.004\ \text{d.}$$

No additional costs ensue for attendance, as the plant may be tended by the existing cellar employees.

The price increase calculated above refers to a total storage period of 150 days.

For a storage period of 300 days the total expenses figure out at £ 240, resulting in a price increase of 1.296 d. per gallon of fruit juice. With larger plants of greater capacity the price increase for cold storage is considerably smaller, according to the tariffs for electricity and water.

Digitized by Google

On the other hand it must not be overlooked that a considerably higher price may be obtained for the fresh, pure and natural juice.

In large undertakings it is advisable to subdivide the cold storage rooms into compartments to avoid having to cool large chambers containing a small amount of juice when the season is advanced. The extra costs entailed thereby are balanced by the reduced running expenses.

3. Plants in service.

One of the main difficulties encountered at present is the reconstruction of existing fruit juice plants for cold storage. The existing cellar localities are exclusively provided with extensive vat equipments placed directly on the floor and in touch with the cellar walls. In such plants heat is directly radiated to the fruit juice so that with cold storage the heat must of necessity be continuously withdrawn from the juice by means of suitable coolers. This circumstance may give rise to heat accumulation in the liquid which is at rest causing partial fermentation, which may endanger the whole stock of sweet juice. The cost of the stock itself is certainly not lost, but the extra price of the sweet juice as compared with the fermented juice is thereby sacrificed.

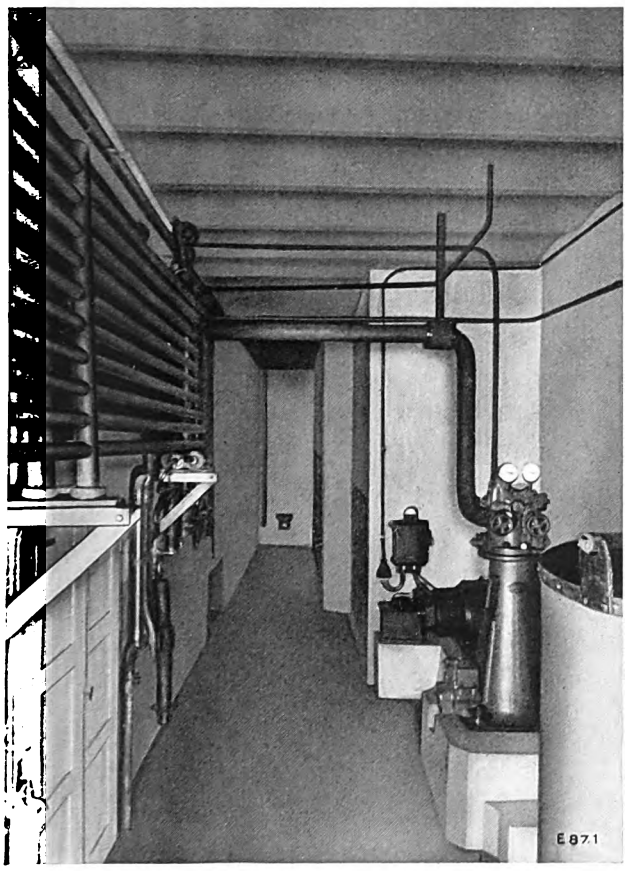

Fig. 3. View of the machine house.

The reconstruction of such plants to modern plants with indirect cooling necessitates expensive building work, which cannot always be justified. In many cases the time required for such work is not available and, therefore, the local conditions must be carefully investigated to ascertain how cold storage can be effected by the simplest means and at minimum expense. In the following we will give a description of two modern plants executed by Messrs. Escher Wyss & Co. in 1928.

I. Cold storage of fruit juice in the «Obstverwertungs-Genossenschaft» Bischofszell.

The unexpected development of the sales of the concentrated fruit juice «Pomol» produced by the Obstverwertungs-Genossenschaft in Bischofszell and the tinned fruit factory there instigated the immediate erection of a modern plant for the cold storage of fruit juice. This plant was to afford facilities for extending the manufacture of Pomol all the year round, as for this purpose only unfermented, natural and pure fruit juice can be employed.

The very extensive cellars with a total superficia. area of about 3210 sq. ft. and a height of 15¾ ft. have no heat insulation whatsoever. The storage vessels have a total content of about 133 335 gallons of fruit juice representing a total value of £ 6000 in the fermented state, and of at least £ 10 000 in the unfermented state.

A daily output of about 5555 gallons of fruit juice was assumed during the fruit-pressing period. The very able manager of the Obstverwertungs-Genossenschaft very carefully and critically studied the various possibilities in order to arrive at a really suitable and appropriate plant. Insulating material could only be applied to two outer walls, whilst the floor, ceiling and remaining walls had to remain uninsulated.

The main problem consisted in selecting the kind of cooling to be adopted in the cellar itself. Three possibilities presented themselves.

1. Cooling of the cellar chambers by means of cold air and cooling of the vats by immersed coolers.

Digitized by Google

2. Exclusive cooling of the fruit juice by means of immersed coolers (without cooling the cellar).

3. Exclusive cooling of the cellar and supplementary cooling of the juice by means of periodical circulation through a central cooler.

Practically the same results are obtained with the cooling methods Nos. 1 and 3.

For the ideal method outlined in the previous chapter only air cooling enters the question, whilst the other auxiliary cooling is quite superfluous.

With the cooling of the cellar or the air, the cellar chambers remain perfectly dry whereby the formation of mildew and the fusty smell of the cellar air is avoided. The equipment according to method No. 1 is more practical in operation than method No. 3, since the latter requires more careful control of the temperature fluctuations in each single vat. For obvious reasons the presence of cooling units in the fruit juice according to method No. 1 might be considered a disadvantage. Solution No. 2 is certainly the simplest of the three, but it has the decided disadvantage that the vats and cellars are continually wet since the moisture contained in the air condenses on the cold walls of the vats and cellars. If the cellar is not carefully inspected, infection may be bred under these conditions, which may have a very detrimental and ruinous effect on the fruit juice, as the latter may be easily contaminated by the air. Fresh fruit juice is exceedingly delicate and readily acquires foreign odours and with greater ease than alcoholic beverages do.

Such uninsulated cellar chambers are a rather tricky factor for the calculation of the necesssary amount of refrigeration. Certain influences cannot be determined mathematically at all so that one is dependent on estimates. This applies especially to the radiation of heat to the fruit juice vats and the radiation through the ground.

The lower ground strata are frequently aqueous and give rise to seepage or humidity phenomena at the points where heat transfer takes place. The evaporation of the water penetrating in this manner represents a very considerable extra load for the refrigerating plant.

The determination of the heat transfer values themselves is also a very uncertain matter as the heat transfer through the ground strata cannot be exactly fixed. One is, therefore, obliged to have recourse to practical experience gained from plants in operation. After a careful study of all items involved it was decided to provide a plant, which would be able to produce 4 000 000 B. T. U. daily during the juice cooling period. With a maximum daily operating period of 20 hours this results in a refrigeration capacity of 200 000 effective B. T. U. per hour.

The necessary room for the machine equipment had to be provided in the cellar chambers themselves.

Based on the above considerations, the management of Bischofszell decided to erect a plant according to the proposals of Messrs. Escher Wyss & Co., which represented a combination of methods No. 1 and No. 3. By this solution the preservation of the stock juice is effected by means of air cooling in the cellars, and circulation of the juice through a central cooler, and partially by means of immersed coolers. This latter auxiliary cooling was adopted especially for the three largest vats, as the direct radiation of heat was very considerable and heat accumulation may, therefore, easily set in.

The upper part of Fig. 1 is a diagrammatic sketch of the actual refrigerating equipment. This latter comprises a carbonic acid machine with counterflow condenser, a central air cooler, an alcohol cooler and the juice cooling apparatus. The lower part of the illustration shows the auxiliary cooling equipment for the vats Nos. 14, 24 and 25. In the counterflow evaporator a solution of alcohol is cooled to a temperature of from 19° to 14° Fahr. and kept in constant circulation through the cooling units in the 3 vats by means of a centrifugal pump.

Fig. 2 is a diagrammatic sketch of the fruit juice circulation. From the fruit press, the juice passes to a receptacle in which the quality mixtures are effected. In this mixing vat the greater part of the coarse fruit residue is simultaneously precipitated. After a short storage period, the juice is then first of all conducted through the two preliminary cooling apparatus, or, if the cooling water is too warm, directly to the fruit juice cooler lying below (to the right) and is thence distributed in the storage vessels.

To the left of the fruit juice cooler is the juice circulating cooler in which at any time the juice of any vat may be recooled by circulation.

Digitized by Google

Fig. 3 is a view of the machine room. To the right is seen the carbonic acid compressor with driving motor, and to the left the double tube counterflow condenser.

Fig. 4 illustrates the cellar chambers, the fruit juice coolers, the air cooler, the juice circulating pumps, the regulating station and the blower.

Fig. 5 shows part of the vat plant with the juice distributing pipelines.

Special attention was paid to the choice of materials, as the fresh fruit juice hase a highly corrosive effect on most metals. In such cases tinned copper apparatus are mostly used. However, it has been observed that the tinning does not resist the influences of the juice and is dissolved after a comparatively short time. The juice then comes in direct contact with the copper, bronze or brass, which is not in accordance with the sanitary regulations. Direct contact of the juice with iron must also be avoided because the iron rapidly oxydizes under the influence of the fruit acid and turns the juice black, at the same time imparting a disagreable taste.

Painting is altogether out of the question as it is very quickly dissolved by the juice. Therefore, a material offering greater resistance had to be found.

For some years a German chemical works has been producing a so-called «mammoth mass», which is absolutely indifferent to the influence of fruit juices. The taste of the juice is in no way affected and this material may, therefore, be employed without hesitation at higher temperatures for the lining of storage vessels, barrels, etc. The mammoth mass is applied to the surfaces to be protected in the hot, liquid state, and if properly applied offers absolute protection.

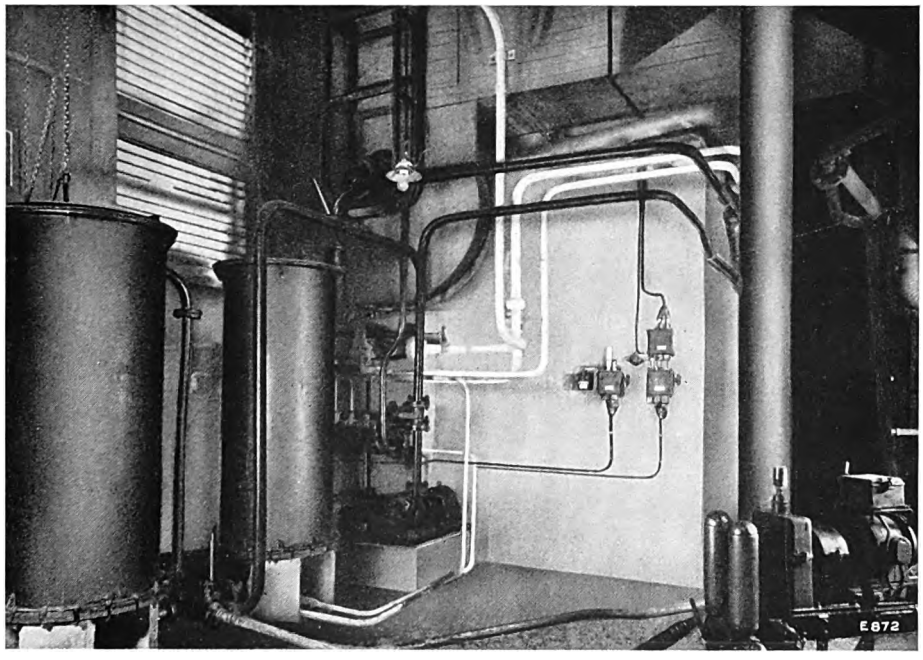

Fig. 4. Cellar chambers.

Messrs. Escher Wyss & Co. made a point of investigating in which way this material might also be used for refrigerating apparatus. With the assistance of a specialist from the above-mentioned chemical works a number of tests were made and it was found that at low temperatures the material becomes less resistive to mechanical influences, i. e. the material becomes brittle and then breaks off when shaken. The material had, therefore, to be applied to the refrigerating apparatus with especial care in order to ensure its perfect binding with the steel surfaces. It turned out that these difficulties were not insuperable and that the mammoth mass is indeed well suited for refrigerating apparatus.

Digitized by Google

At the end of each season the apparatus should be inspected and any damaged places be «remammothed», which is not a very expensive undertaking.

In consequence of these favourable results, the clients decided to have all refrigerating apparatus coming in contact with the juice mammothed according to this special process. The first season has proved that the process has stood the test though several apparatus will have to be remammothed before the beginning of the next season.

At all events the juice has suffered no change during its seven months' storage and its flavour is precisely the same as on the day the juice left the fruit press.

When using this material, however, great care must be taken in dimensioning the refrigerating apparatus, as the mammoth mass is a very good insulator and, therefore, considerably hampers the heat transfer.

In addition, the apparatus must be specially designed for mammothing, and should be readily dismantled. Both conditions have been duly considered in the apparatus supplied by our firm. By removing the outer jacket of the juice cooling apparatus, the complete inner heat exchange apparatus lies free and is accessible from all sides. It might be considered more advantageous to employ open sprinkler apparatus instead of the closed apparatus. The former is, however, not to be recommended as the juice has then too close contact with atmospheric oxygen, which it partly absorbs. Contact with oxygen must be avoided as far as possible since it encourages fermentation and enhances the danger of infection.

After starting up the plant, it was found that the radiation of heat was very considerable and was greater than the amount provided for. The client, therefore, ordered the additional insulation of a side wall. This was done not exclusively on account of the greater losses, for the refrigerating equipment is very amply dimensioned, but rather to prevent too high a temperature drop in the neighbouring cellar, where fermented beverages are stored, or fermentation is intentionally allowed to proceed.

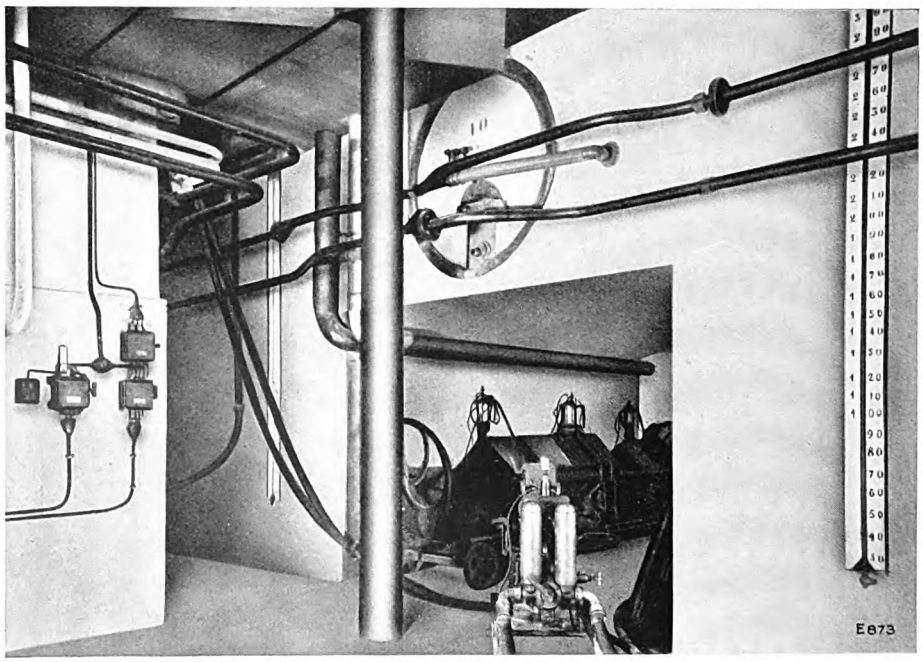

Fig. 5. Part of the vat plant with juice distributing pipelines.

To sum up it may be stated that the very difficult problem has been excellently solved in every respect.

With this plant, the price increase per gallon amounts to about one penny for the first quarter; for the other quarters the increase will drop to about one halfpenny per gallon. The price increase

Digitized by Google

is not considerable in spite of the unfavourable lay-out of the plant and the expensive equipment, especially remembering the high extra value of the unfermented beverage.

A further question arises in connection with this first problem, viz. the retailing of the unfermented fruit juice. As mentioned above, the germs contained in the juice immediately commence to develop as soon as its temperature exceeds the permissible limit. The juice must, therefore, be kept at a low temperature up to the moment it is consumed. To render this possible, the juice must

On introducing this beverage after the fruit harvest in the autumn of 1928, the demand was very small, as such innovations are invariably accepted with a certain amount of prejudice, especially as a large percentage of non-alcoholic beverages have a disagreable flavour.

However, the consumption increased rapidly and did not cease even during the exceptionally cold winter 1928. The mean consumption amounts to about 12 gallons per day, whereby it must not be overlooked that the canteen only serves the midday

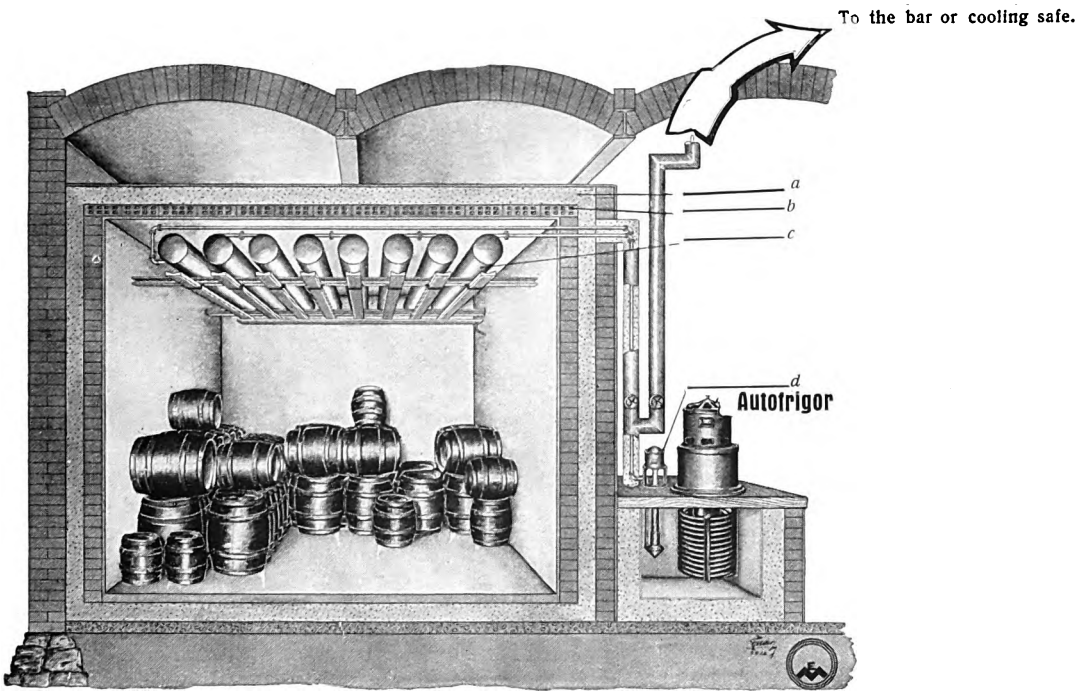

Fig. 6. Refrigerating plant „Autofrigor" with brine cooling.
a) Cork insulation; *b*) Hoordis ceiling; *c*) Brine piping; *d*) Brine pump.

be stored in the restaurants, bars, etc. under precisely the same conditions as it is stored in the juice cellars. A great many of the leading restaurants, canteens, etc. are nowadays equipped with refrigerating plants in which several barrels may be stored at the required temperature.

Messrs. Escher Wyss & Co., by way of setting a good exemple, have installed a small «Autofrigor» refrigerating plant in their own canteen, which enables them to preserve the fruit juice at a temperature of from 30° to 28° Fahr. Fig. 6 illustrates such a plant. The juice is sold in the canteen in bottles containing about ½ pint.

meal (lunch). During the summer months there will undoubtedly be a considerably increased consumption.

It is a fact worth mentioning that this fresh juice agrees with everybody and causes no kind of complaint. The small bottles are sold at 2 d. each, which amount covers all overhead expenses. For public restaurants the price would probably have to be fixed at 3 d. per bottle.

The transport of the cooled fruit juices themselves offers no difficulties, as they may be carried by motor lorries and, therefore, are not exposed to much heating during the short duration of the

Digitized by Google

transport. A point must be made of storing the bottles in the cold storage room immediately after their arrival.

II. Plant of the Obstverwertungs-Genossenschaft vom Linthgebiet in Uznach.

Towards the end of last summer the Obstverwertungs-Genossenschaft Uznach investigated the same question and after some preliminary negotiations placed an order with Messrs. Escher Wyss & Co. for a fruit juice refrigerating plant for a capacity of 2220 gallons a day. The whole equipment was at first to serve for experimental purposes and, therefore, only two vats of 10 000 gallons content each were ordered for storing the juice. However, very soon after the equipment for two further vats was ordered and the capacity of the plant thus increased to 40 000 gallons.

In this plant, the four vats occupy only a small part of the whole cellar, and, therefore, it was decided to adopt method No. 2, as it would not be economical to cool the whole cellar instead of only the four vats, apart from the fact that a low temperature was quite undesirable for the remaining vats. The disadvantage of condensation on the cold walls had, therefore, to be accepted in this case. To avoid the formation of mildew, the cellars had to be well aired and cleaned. This results in additional losses of cold and increases the expenditure of power.

Contrary to the Bischofszell plant, the whole refrigerating equipment of the Uznach plant could be arranged in the fruit-pressing room on the ground floor. Fig. 7 illustrates the complete refrigerating equipment with exception of the storage vats in the cellar lying directly underneath the refrigerating plant.

From the left to the right this illustration shows the driving motor, the vertical ammonia compressor,

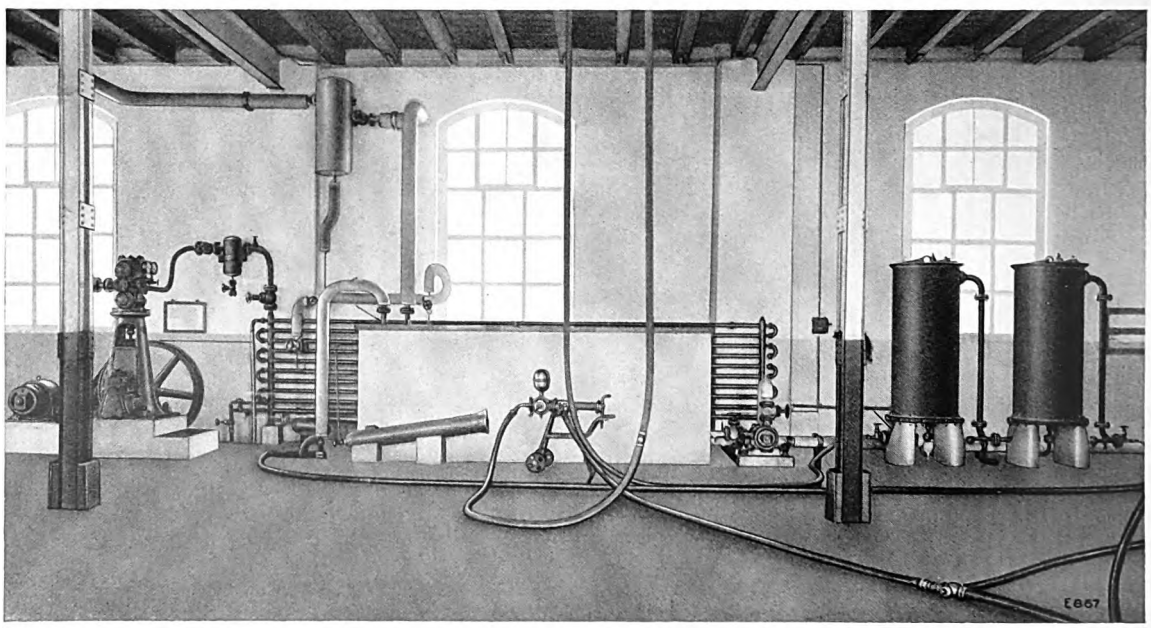

Fig. 7. Plant of the Obstverwertungs-Genossenschaft vom Linthgebiet in Uznach.

in the background a double tube counterflow condenser, in the foreground the evaporator or alcohol solution cooler with the circulating pump on the right hand side. Finally there follow two cylindrical juice coolers for alcohol circulation on the one hand and fruit juice circulation on the other hand.

As in this plant the ammonia system was adopted, all apparatus coming in contact with the fruit juice were designed for circulating alcohol solution. The reason for this will be explained in the next section.

In the foreground is seen the juice pump to which the juice pipelines are connected. The storage vats are provided with immersed coolers through which cooled alcohol solution circulates. The im-

Digitized by Google

mersed coolers and the cylindrical juice coolers are mammothed according to the same process as in Bischofszell.

It must be specially mentioned that the mammoth coating must be most carefully applied as otherwise the fruit juice might easily spoil and the apparatus corrode very quickly.

The plant was put into service without a hitch just seven weeks after the order was placed. The cooling was perfectly satisfactory, i. e. the required temperatures were easily attained. The experience gained so far has proved that after a storage period of seven months the juice is still of excellent quality and has not suffered by the storage. This fact shows that the mammoth coating of the refrigerating apparatus has also been a success in this plant. Nevertheless, at the beginning of the new season at least the immersed coolers should be relined with mammoth.

The plant is so arranged that further vats can at any time be comfortably and inexpensively added for the cold storage of the juice.

4. Choice of the system.

The choice of the system is influenced by a number of factors and it would be wrong on principle to give one or the other system the preference without previously investigating the conditions.

From the refrigeration point of view both systems can under all circumstances be employed. The carbonic acid system operates with neutral vapours, which in case of leakage have no detrimental effect on the fruit juice, whilst the ammonia vapours are readily absorbed by the liquids.

A disadvantage of the carbonic acid system is the higher power consumption as compared with the ammonia system. This latter system, therefore, operates more economically than the carbonic acid system, and this difference increases in favour of the ammonia with increased cooling water temperature.

The ammonia vapours are lighter than air and, therefore, rise to the top of the room. Carbonic acid vapours are heavier than air and accumulate at the lowest point.

When the general lay-out of a plant necessitates the erection of the complete refrigerating equipment in the cellar, it is advisable to provide a carbonic acid plant. If, however, as is the case in Uznach, the cooling equipment can be installed in a room overground, then the ammonia system may be adopted. With the latter it is, however, advisable under all circumstances to adopt indirect cooling, i. e. to avoid ammonia apparatus coming into direct contact with the juice.

In refrigerating plants like the one at Bischofszell, the installation of an ammonia machine would present a continual source of danger for the stored juice. The management, therefore, after considering the prevailing conditions, very wisely decided to give the carbonic acid system preference. In an ideal plant cooling exclusively by air, the carbonic acid system is to be recommended as by employing direct evaporation the initial costs are much lower. If the ammonia system is adopted, indirect cooling is desirable under all conditions.

In conclusion we would mention that leakage in such plants may be occasioned by changes in the building foundations, by careless manipulation and by damaged parts. Although in hundreds of plants operating, detrimental losses of ammonia have never occurred, yet the above-mentioned source of danger is always present, so that the choice of the system and the lay-out of the plant must be studied for each individual case.

It is also quite an erroneous idea to instal a cheap plant for the sake of deriving a few financial advantages, especially when the initial cost of such a plant is very modest in comparison to the value of the stored beverage.

Digitized by Google

The refrigerating plant for the restaurant of the "Grands Magasins du Printemps" in Paris.*)

By R. Irminger.

Many will still remember the great fire, which in 1922 destroyed the greater part of the newly completed building of the « Grands Magasins du Printemps » in Paris. The re-erection of this building under the energetic and able supervision of the architect Georges Wybo made such rapid progress that the new building in the Boulevard Haussmann was opened to the public again in June 1924.

Fig. 1. Part of the facade of the new "Magasins" in the Boulevard Haussmann.

Fig. 1 illustrates part of the facade and gives an idea of the size and harmonic beauty of the building. The aims of the architect were, however, not only directed on the outer appearance of the house, but he spared no effort to give the interior a modern note by adopting all the latest and most up-to-date appliances and equipments.

*) See Revue Générale du froid, Aug.—Sept. 1927.

The « Grands Magasins du Printemps » made a point of offering their customers all modern comfort and, therefore, also provided a restaurant covering the whole of the sixth floor. The ingenious utilization of the available room and the very comfortable upholstering may be gathered from Fig. 2. To facilitate the service, the kitchens are located on the same floor, whilst the confectionery, butchery and grocery department are situated in the terrace of the seventh floor.

The complete plant with auxiliary equipments renders it possible to serve 1.000 lunches and 5.000 portions of tea daily.

The service is automatic. The gas ranges are arranged along the facade. On one side of the restaurant hall are situated the fruit, cheese and wine depots, whilst on the other side are to be found the hors d'œuvres bar, a meat depot and a grocery store. Two lifts for the china and cutlery and a staircase connect the kitchens with the confectionery, butchery and foodstuffs department. The latter are situated over the restaurant.

All the requirements of a large restaurant can be easily satisfied. The hot-plates are normally heated by low-pressure steam, but they may also be heated by gas if needs be. The hot water supplied by the boilers is distributed through two systems of pipelines, one of which carries water of 140° Fahr. for washing and cleaning the plates, dishes, knives and forks, whilst the other supplies water of 195° Fahr. for preparing the different hot beverages and for washing the table linen.

Electricity is used for heating the pastry ovens and plate warmers in the restaurant. Each oven is designed for two heating stages whereby baking is rendered more efficient and economic.

The kitchens are equipped with all modern mechanical apparatus, such as tiltable gas-heated vessels, mixing vessels, electrically-driven coffee grinders, etc. The most important part of the mechanical equipment, apart from the gas ovens, is

Digitized by Google

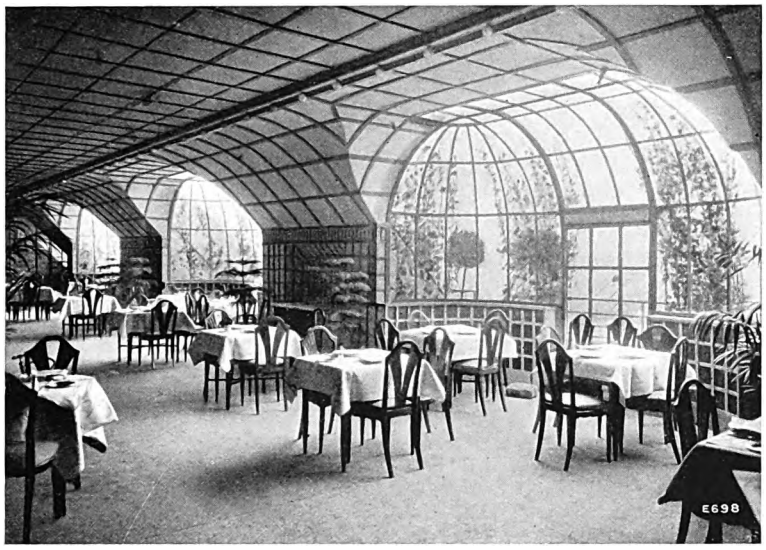

Fig. 2. Restaurant.

undoubtedly the refrigerating plant, which, in order to satisfy the manifold and complicated requirements, was the subject of a special study.

Messrs. Escher Wyss & Co. in Zurich were entrusted with the execution of this very interesting refrigerating plant. There are not less than 16 places for refrigeration distributed over the sixth and seventh floor of the building, see Figs. 3 and 4.

The points of refrigeration in the kitchen of the sixth floor are as follows:—

(1) Hors d'œuvres cooling safe, inner temperature 40° to 43° Fahr. (Fig. 5.)

(2) Ten-door cooling safe with glass windows for foodstuffs, inner temperature 35° to 39° Fahr. (Fig. 6.)

(3) Ice cream conservator, temperature 9° Fahr. to 5° Fahr. (Fig. 7.)

(4) Beer cooler at the bar, temperature 43° Fahr.

(5) Cooling safe in the bar for wine, butter, etc., temperature 39° to 43° Fahr.

(6) Cooling safe for wines and mineral waters, temperature 46° to 50° Fahr.

(7) Cooling safe for fruits, temperature 43° to 46° Fahr.

(8) Cooling equipment for drinking water, temperature about 46° Fahr.

The cold storage room for meat, the pastry department, the ice-producing department and the machine room are located in the seventh floor. The refrigerating points in this floor are the following:—

(9) Cooled marble tables in the pastry department (Fig. 8).

(10) Cooling safe in the confectionery, temperature 43° to 46° Fahr. (Fig. 8).

(11) Cooling safe for fish. The fish are laid on ice. The safe is cooled to prevent the too rapid melting of the ice. (Fig. 9.)

(12) Day cooling safe with 7 doors, temperature 35° to 39° Fahr.

(13) Cold storage room for meat, temperature 35° to 39° Fahr. Preliminary cooling room, temperature 43° to 46° Fahr.; the latter serves as cold storage room for vegetables (Fig. 10).

(14) Ice-producing plant with a daily production of 660 lbs of ice. The ice is used in the day cellar and also to keep the fish fresh (Fig. 12).

(15) Ice cooling room, temperature about 30° Fahr.

(16) Ice cream manufacture for a daily production of 100 gallons, including the ice cream conservators (Fig. 11).

This intricate refrigerating problem could not be solved by individual cooling plants as the initial costs would have been much to high, therefore, centralized refrigeration was resorted to.

It must not be overlooked that the production of ice cream necessitates very low temperatures

Digitized by Google

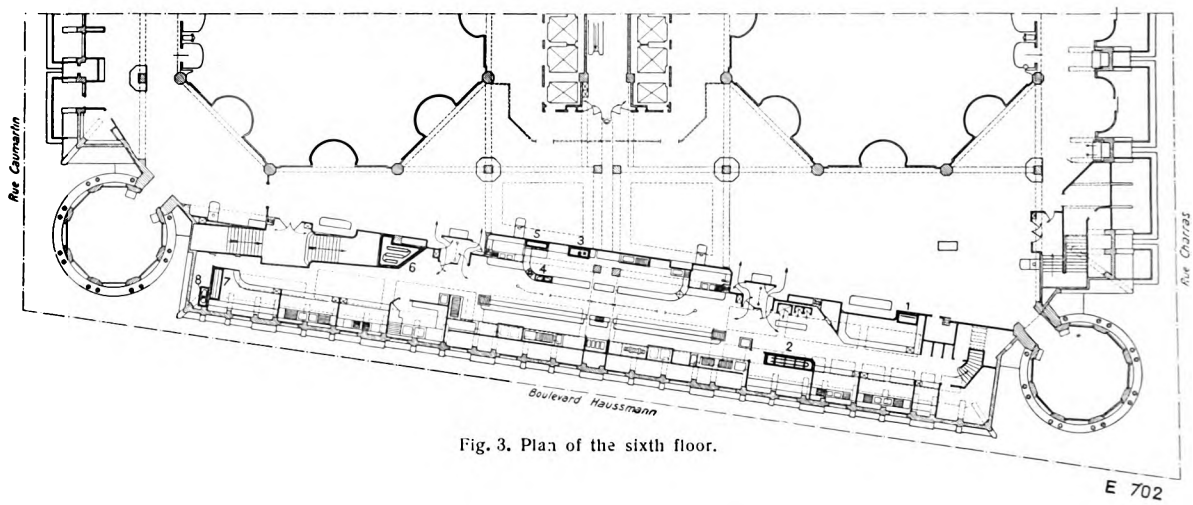

Fig. 3. Plan of the sixth floor.

(brine temperature from 5° to 1° Fahr.). At such a low brine temperature a refrigerating machine operates with a very low efficiency. The remaining cooling points require brine of only 23° to 21° Fahr. and under these conditions a refrigerating machine operates most favourably. For this reason it would be uneconomical to cool the different cold storage rooms with a brine of 5° Fahr. Messrs. Escher Wyss & Co., therefore, solved the problem by installing the following machines:—

(1) A carbonic acid machine with a capacity of 88.000 B. T. U. per hour at an evaporator temperature of 18° Fahr. and a cooling water temperature of 50° Fahr. This machine serves for cooling most of the cold storage rooms and runs 10 hours a day.

(2) Two automatic refrigerators «Autofrigor» with a capacity of 6.000 B. T. U. per hour. These refrigerators serve for the production and conservation of ice cream (point 16).

(3) One automatic refrigerator « Autofrigor » with a capacity of 4.800 B. T. U. per hour for the ice cream conservation in the sixth floor (point 6).

The automatic refrigerators « Autofrigor » were described in detail in the « Escher Wyss News » No. 6 / 1928 *) to which we would especially refer our readers. Thanks to their automatic operation, these machines are admirably suited for the production and conservation of ice cream. Although the consumption of ice cream fluctuates very considerably, yet the confectioner in charge of the production can operate the plant without the aid of other persons, as the « Autofrigor » works quite automatically.

The constructional details of the ice cream producing plant are shown in Fig. 11. One sees two ice cream machines and the appropriate arrangement

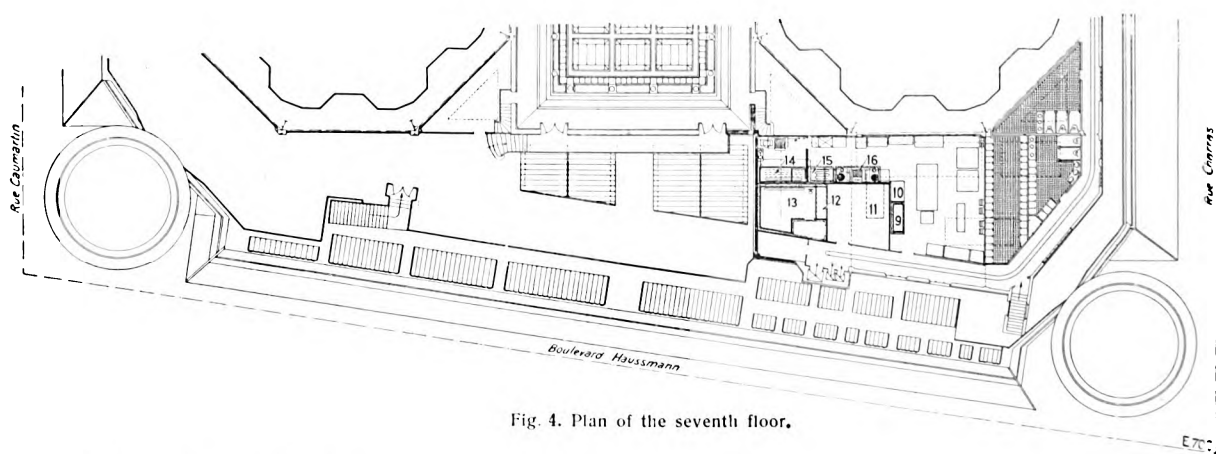

Fig. 4. Plan of the seventh floor.

*) G. Scholl: Small Refrigerators.

Digitized by Google

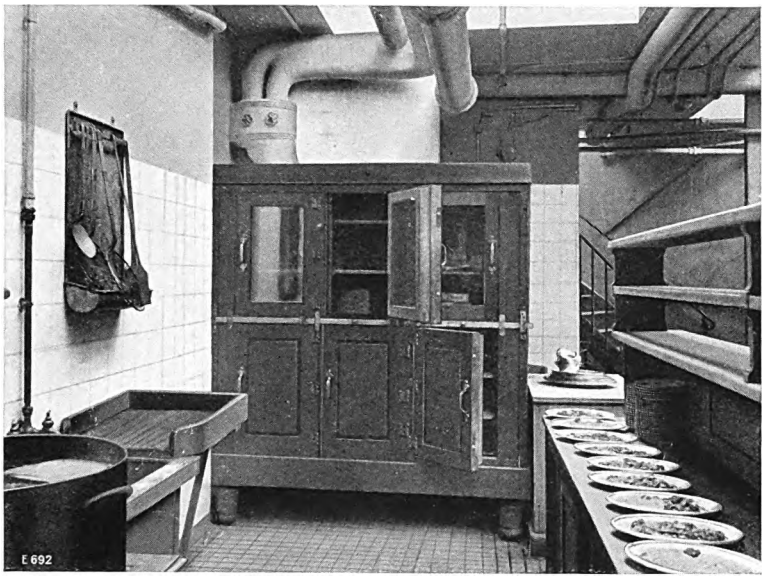

Fig. 5. Cooling safe for hors d'oeuvres

of the porcelain containers. The latter are protected by a pocket immersed in the brine. This enables the conservators to be withdrawn and thoroughly cleaned. The plant also contains a box immersed in the brine and divided into a number of compartments serving the purpose of storing the ice cream.

The two ice cream machines are provided with blades actuated from a lineshafting driven by an electric motor.

The safe illustrated in Fig. 6 is cooled by an «Autofrigor» refrigerator, type A 1203, and contains porcelain conservators and compartments for pastry. Special compartments with higher temperature are provided for storing coffee creams, etc. The upper part of this safe and the lid is lined with tin, which facilitates its cleaning.

We will now proceed to give a short description of the main refrigerating plant, which embodies some very interesting features.

The compressor, Fig. 12, is the latest type of enclosed vertical machine manufactured by Messrs. Escher Wyss & Co. An automatic toothed wheel pump, driven from the crankshaft, looks after the lubrication of the driving mechanism and crankshaft. A reservoir is provided in the frame of the compressor for the lubricating oil to be circulated. Owing to the

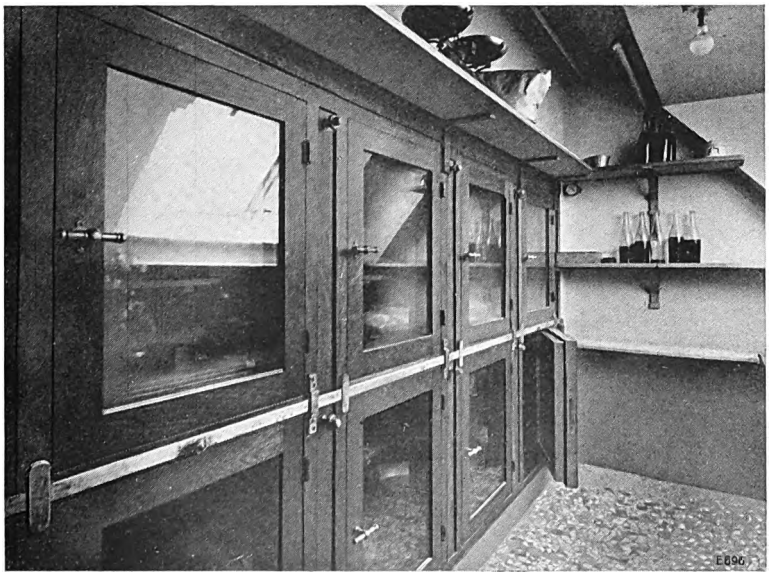

Fig. 6 Cooling safe for foodstuffs with ten doors and glass windows.

Digitized by Google

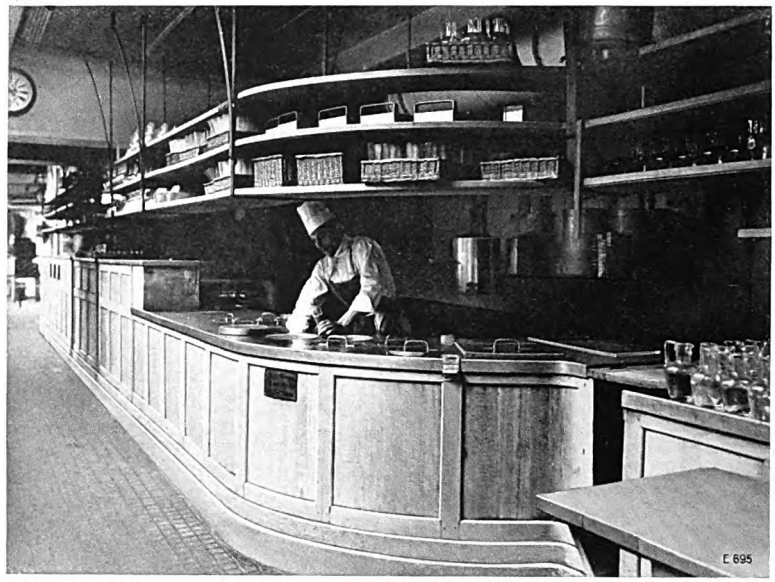

Fig. 7. Ice cream conservator.

provision of a high-grade stuffing box and of appropriate valves, the plant operates most reliably with a minimum of attendance. The double-acting cylinder is made of fine-grained special cast material for very high stresses. All essential parts, such as glycerine separator, dirt trap, suction valve, injection valve and gauge are suitably combined with the compressor and are easily accessible.

The piston consists of a piece of soft steel, case-hardened, ground according to a special process, and provided with segments of special cast material, which render the cylinder perfectly tight and are subject to very little wear. The compressor is also equipped with a safety device with bye-pass and alarm signal, which prevents breakdowns from a failure of the condensing water or from carelessness of the attendants.

A double-tube counterflow condenser of Escher Wyss patented design is provided for condensing the CO_2 vapours.

The choice of the carbonic acid system as cold transmitter for such plants is peremptory as the spreading of obnoxious vapours must be avoided under all circumstances. Carbonic acid gas is indeed odourless and presents no danger to the attendants or to the stored goods. Fig. 12 illustrates the machine room and the ice producing plant. Great care was taken to avoid noise and vibrations from the line-shafting. The compressor is erected on a vibrationless foundation. This arrangement has proved very satisfactory and has never given rise to trouble, in spite of the fact that the machine room lies immediately over the restaurant.

The ice is withdrawn from the cubicles by hand (660 lbs per day). The withdrawn cubicle is warmed by means of the condensed water, which facilitates removing the blocks of ice. This work is performed

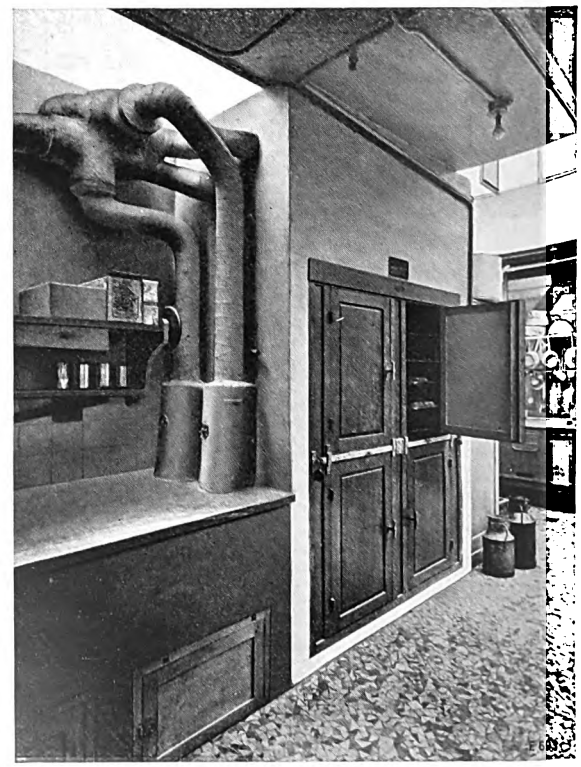

Fig. 8. Cooling safe for confectionery.

Digitized by Google

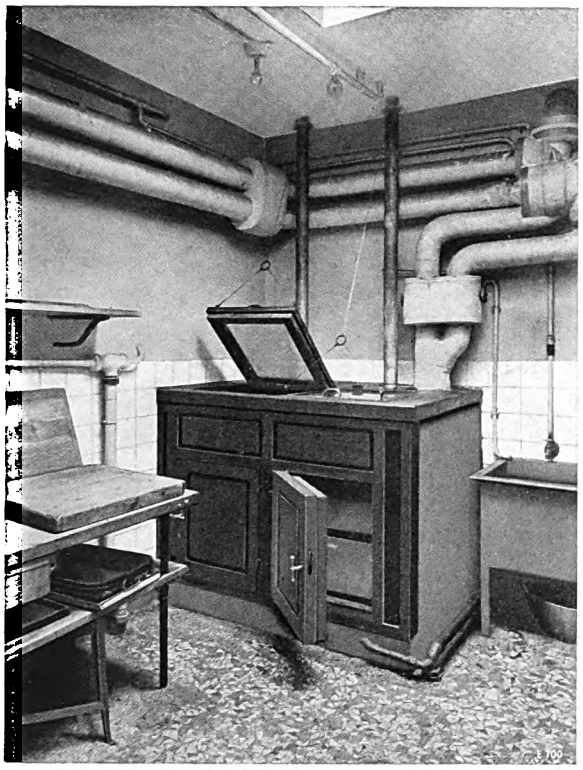

Fig. 9. Fish safe.

once a day; the ice is stored in the room (point 15) and may be fetched from there according to requirements.

All cooling safes are cooled by so-called brine systems consisting of smooth tube coils or large tubes in order to obviate fluctuations in temperature as far as possible.

The brine is pumped to the different refrigerating points by means of a motor-driven centrifugal pump. Special attention was paid to the insulation of the brine pipelines owing to the very high temperatures in the kitchens and certain other departments. All cooling safes are connected in parallel to two main brine pipelines, which enables the temperature of all refrigerating points to be easily adjusted. In addition it is possible to switch in or out any refrigerating point whilst the plant is operating.

The cold storage room and its antechamber are indirectly cooled by means of cold dry air. This system has proved most satisfactory for the preservation of fresh meat.

The fish safe, Fig. 9, contains an upper part, which is easily accessible through lids balanced by counterweights. The lower part is provided with a number of drawers of galvanized sheet metal and serves for the storage of lobsters and other crustaceans.

The «tour à pâtisserie», Fig. 8, is a marble table on which the different doughs for the pastry are prepared. This table is cooled by means of a refrigerating unit fitted directly underneath the marble slabs. The «tour à pâtisserie» facilitates the preparation of the flour inasmuch as the low temperature prevents the dough sticking to the marble whilst being kneaded.

The cooling of the filtered water for drinking is performed by means of a special equipment consisting of a vessel, filled with water, serving as intermediate cold transmitter in which two coils are

Fig. 10. Safe for daily consumption.

Digitized by Google

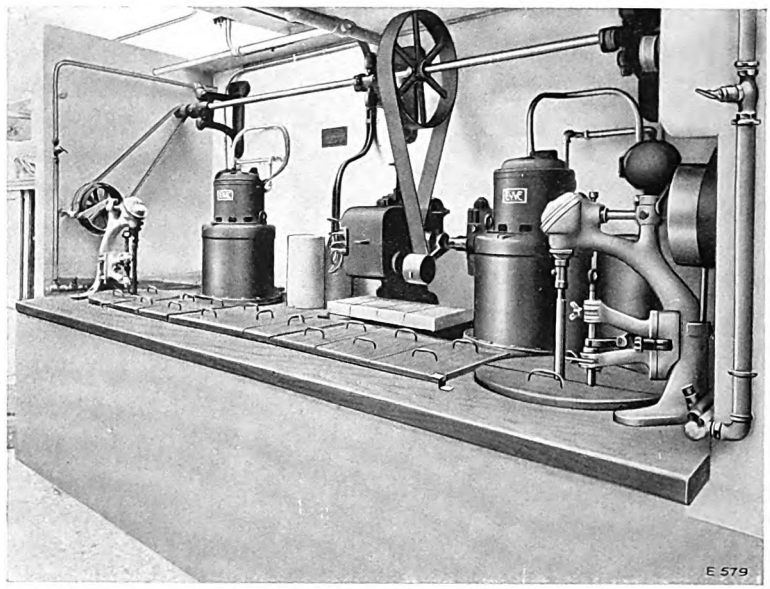

Fig. 11. Ice cream production

immersed, one of which circulates the brine, whilst the other circulates the filtered water. In this manner a rapid cooling of the filtered water is achieved without risk of the water-circulating coil freezing, which would burst through the internal formation of ice.

The majority of the cooling safes and of the cold storage rooms is made of insulated brickwork. All walls of these refrigerating points are lined with washable tiles.

The careful execution of all carpenter's and joiner's work, especially of the doors, which are very severely stressed, is worthy of mention. The doors are provided with patented double locks, which allow of simple and rapid handling but at the same time ensure perfect tightness of the cooling safes and rooms.

All the refrigerating machinery of this extensive plant was put into service in July 1924 and has since then operated without interruption. The carbonic acid compressor and the «Autofrigor» refrigerators have during this period given every satisfaction in the service of the «Grands Magasins du Printemps».

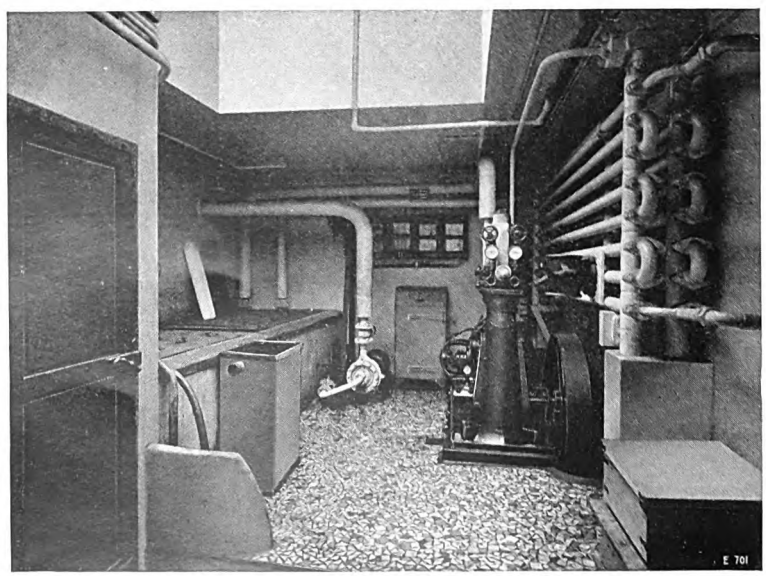

Fig. 12. Machine room and ice production.

Digitized by Google

The refrigerating plant for the Sanatorium "Du Midi" in Davos Platz.

By R. Irminger.

In the world-renowned spa of Davos, attempts were made during the winter to cool the existing cold storage rooms directly by means of the cold air of from +14° to —4° Fahr. without putting the refrigerator into service. All these attempts, however, failed as the air at Davos is much too dry and produces a hard crust on the meat. In other words, air-dried, so-called « Bindenfleisch » was produced. The foodstuff remnants and preserved foodstuffs were also dried in the same manner by the air.

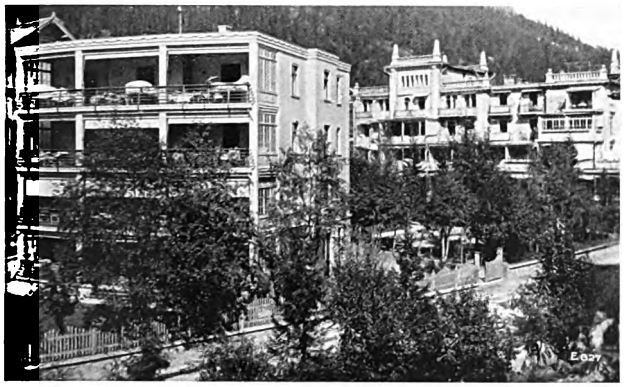

Fig. 1.

For this reason the sanatorium «Du Midi», Fig. 1, on the advice of its architect R. Gaberel, installed a new refrigerating plant, during a reconstruction, comprising an « Autofrigor » refrigerator, type 2002, manufactured by Messrs. Escher Wyss & Co. in Zurich. This plant embodies an antechamber of about 60 sq. ft. in which food remnants, vegetables, etc. are cooled, and the actual cold storage room in which fresh meat, poultry, etc. is stored, Fig. 3. The size of this plant enables the administration of the sanatorium in future to buy meat in large quantities and thus to economize in expenses. In addition, the meat can be stored a long time, which enhances its taste. The food remnants stored in the antechamber also remain more hygienic and tasty by the cold storage and opened canned meats and fruits can be used to the last morsel.

In addition to these advantages, the «Autofrigor» refrigerator offers the further advantage of producing ice. Contrary to brine refrigerating plants in which the ice cubicles are placed in the brine of very low temperature, the ice is produced in flat dishes exposed to a current of cold air. This hygienically perfect ice is indispensable in a sanatorium for medicinal purposes and, besides, the production costs

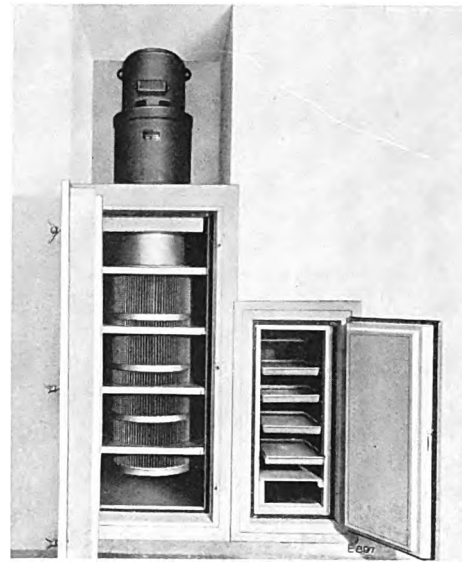

Fig. 2.

are considerably lower than the former expenses incurred by the purchase of ice.

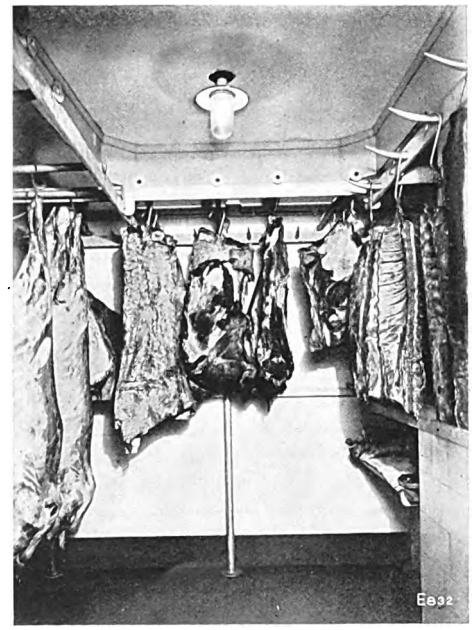

Fig. 3.

The « Autofrigor » refrigerating plant in the sanatorium « Du Midi », as elsewhere, has proved so satisfactory that the administration would not like to be without it.

Digitized by Google

Stodola Festival Book.

The Festival Book*), published on the occasion of the 70th birthday of Prof. Dr. A. Stodola, contains a number of articles by collaborators of our firm. In the following we give a short survey of the contents of these articles.

1. Ackeret J.: On energy losses in equipressure blade grids.
   The flow behind rows of blades, as met with in impulse steam turbines, is turbulent even in the absence of friction. For small deviations, the energy of these secondary movements may be calculated by means of the supported wing theory.
2. Amstutz Ed.: The theoretical calculation of the characteristics of high specific speed axial runner wheels.
   The outputs and efficiencies of high specific speed axial wheels may be calculated for relatively large hub diameters and large pitches with the aid of the supported wing grid theory. The results obtained under restriction to incompressible liquids coincide qualitatively very well with the test results of propeller and Kaplan turbines.
3. Flatt F.: The influence of wheel friction and of injection loss on the choice of the most favourable ratio $\frac{u}{c}$ with full admission impulse stages of steam turbines.
   The influence of the wheel friction and of the injection loss (or the radial blade length) on the efficiency and most favourable ratio $\frac{u}{c}$ is investigated. The characteristic values for wheel friction and injection are ϱ and σ, which are only dependent on the quantity of steam per second, the drop in the stages, the volume of steam and the speed.
4. Jaquet E.: A study on the question of the damping of vibrations in steam turbine bladings.
   The damping of blade vibrations is investigated under the assumption that, firstly, the tension depends on the deformation velocity and, secondly, that with plastic deformation a damping elastic hysteresis ensues. The logarithmic decrement is calculated for both cases.
5. Keller, Curt: A study on the analytical calculation of highly stressed wheel discs.
   Each wheel profile, tapering towards the periphery, may be advantageously replaced by a smaller number of tapered partial discs, which may be successively analytically calculated. In the calculation of a modern highly-stressed steam turbine wheel profile of Escher Wyss & Co. Zurich design, this method is compared with former analytical and graphical approximating calculations.
6. Nyffenegger H.: Vibrations in the driving mechanism of turbo-locomotives.
   As with electric locomotives with connecting bar drive, so also in turbo-locomotives with mechanical power transmission, critical speeds occur, which are caused by the oscillation of the masses. It is shown how, under inclusion of the elasticity of the driving axle and wheel spiders, the critical speeds of the single-turbine Zoelly-Escher Wyss locomotive and two-turbine Zoelly-Krupp locomotive may be determined. Trial trips with the dynamometer car of the Swiss Federal Railways confirm the result of the calculation for the first-mentioned locomotive. By correct dimensioning of the individual parts of the driving mechanism, the critical zones may be displaced in such a manner that they do not influence the operation of the locomotive.

We reserve the right to publish some of these essays in our „Escher Wyss News".

*) Dedicated to Prof Dr. A Stodola by his friends and pupils on the occasion of his 70 th birthday. Edited by E. Honegger, published by Orell Füssli Zurich and Leipsic, 1929

Publishers: Escher Wyss & Co., Zurich (Switzerland).
Printed by: Siegfried & Co., Zurich (Switzerland).
London Office: Escher Wyss & Co., 20 Grosvenor Gardens, Westminster, London S. W. 1.
Tokyo Office: Escher Wyss & Co., Marunouchi Building, Room 322, Tokyo.

Digitized by Google

Ja 8'31

ESCHER WYSS NEWS

Volume II

4

July-August 1929

Published by Escher Wyss & Co. S. A.

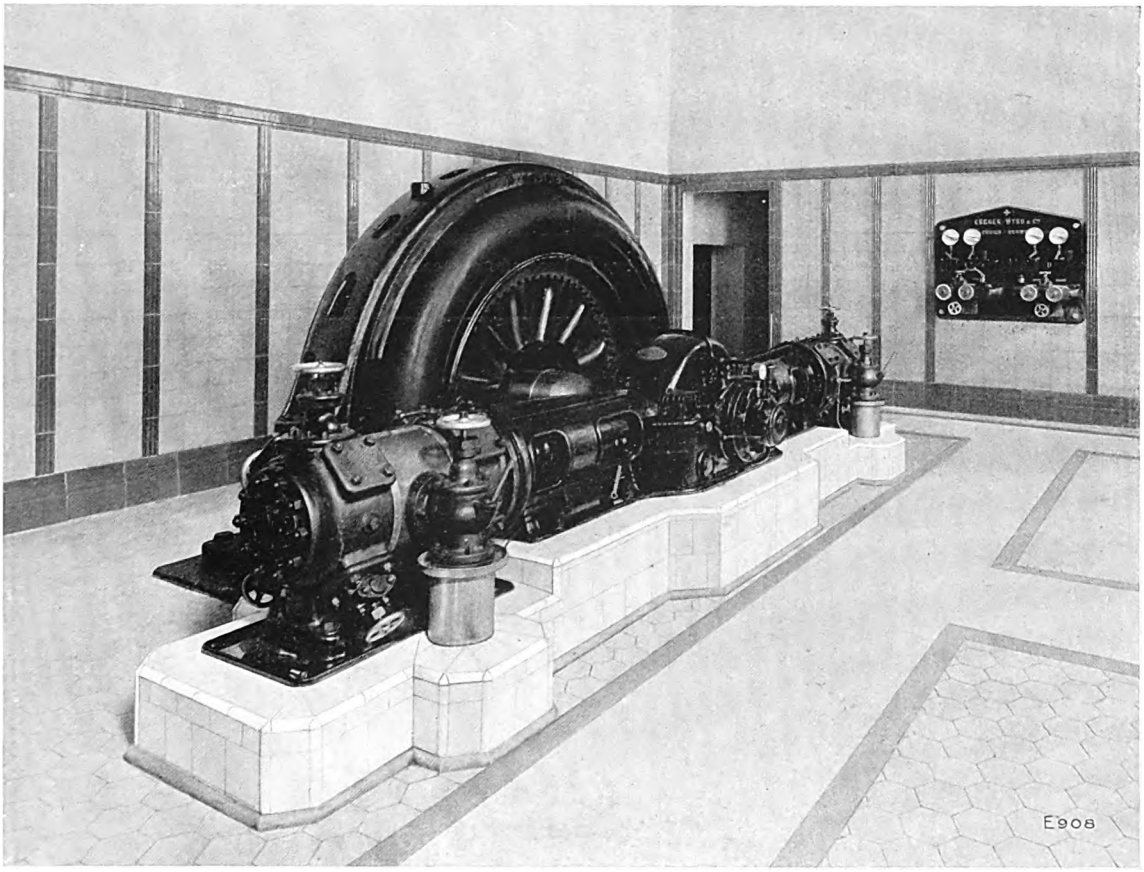

Dairy of Messrs. Vigor, Sao Paulo. Machine room with duplex ammonia compressor, capacity 1 200 000 B. T. U., directly coupled with three-phase motor.

Contents

	Page
1. The development of propeller and Kaplan turbines	123
2. The hydro-electric power station of Akanogawa I	133
3. Fourdrinier paper-making machine for high-class papers	137
4. Oscillations in the driving mechanism of turbo-locomotives	145
5. The „Autofrigor" refrigerating plant in the „Grand Hotel du Lac", Lucerne	152
6. The new carcase and offal utilization plant of the City of Cologne	156

AGENTS FOR UNITED STATES
THE NATIONAL POWER MACHINERY CORP.
2912 CHANIN BLDG., NEW YORK

Digitized by Google

Digitized by Google

ESCHER WYSS NEWS

PUBLISHED BY MESSRS. ESCHER WYSS & Co. S. A.

VOLUME 2 | No. 4 | JULY-AUGUST 1929

The "Escher Wyss News" will be published periodically in bi-monthly issues. Reprinting of articles or illustrations appearing therein will only be permitted when source thereof is duly acknowledged. Single numbers 1/6; one year's subscription 7/6.

The development of propeller and Kaplan turbines.

B. R. Geussenhainer.

The ever-increasing demands for energy by industries and of economic situation created during and after the Great War introduced new problems for water turbine designers. The available water power must be economized to the utmost and, therefore, high-efficiency machines are the order of the day and to reduce the capital costs of generators, their speed must be considerably raised. Further the increasing development of river power stations utilising low heads and large water quantities have necessitated turbines of higher capacities in order to reduce the number of units to a minimum. The two latter requirements could not be satisfied by the hitherto predominating Francis type turbine since, to secure a good efficiency, the maximum specific speed is limited to 400 to 450 r. p. m. and with large capacities would lead to runner wheels having abnormal dimensions. These latter on exceeding a diameter of 15 feet would lead to difficulties in rail transport, owing to limitations imposed by tunnels, so that multi-part runner wheels would become necessary, which from the constructional point of view are undesirable, expensive and difficult to assemble.

The problems involved were partly solved by the propeller turbines, whose blades are inserted in the hubs. This latter measure somewhat alleviates the transport difficulties. The new type of turbine also offers the advantage, especially beneficial to low-pressure plants, that it operates with practically constant efficiency over a wide range of the specific speed. In addition, the specific capacity of Francis turbines varies but little with varying speeds, whilst that of Kaplan turbines increases very considerably with increased specific speed so that practically the same volume of water can be dealt with at all heads. Precisely at the low heads an excess of water prevails under normal conditions.

The European turbine manufacturers interested in the Kaplan turbine have undertaken extensive tests on a scientific basis in their hydraulic laboratories, involving heavy expenses, to systematically study propeller turbines and to successfully introduce this new type, till very soon propeller and Kaplan turbines up to the largest dimensions and outputs have become available to clients at home and abroad.

With the so-called small turbines of from 6″ to 20″ runner wheel diameters, automatic governing by means of an oil-pressure governor as is customary for electric power stations is dispensed with and in its stead a special constant voltage direct current generator is used. For small lighting plants such a set offers special advantages. At constant water volumes, the guide apparatus is provided with fixed blades, at fluctuating water volumes with movable blades, which are adjusted by hand. According to the local conditions, the turbine may be designed as a spiral or a frontal turbine, Fig. 1, as a horizontal wall turbine, or finally as a vertical turbine.

AGENTS FOR UNITED STATES
THE NATIONAL POWER MACHINERY CORP.
2012 CHANIN BLDG., NEW YORK

Digitized by Google

For large units and low heads the latter type predominates. If, in spite of employing a propeller turbine, the speed is still too low, a speed-increasing gear is provided between the generator and turbine.

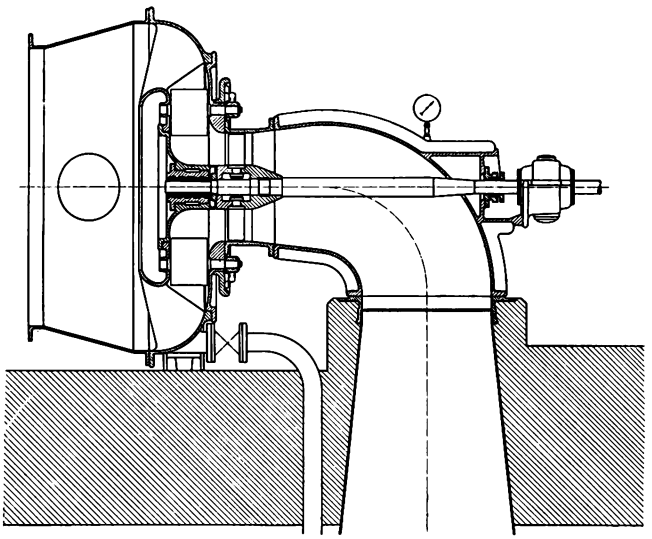

Fig. 1. Propeller turbine in frontal casing.

The cheapest solution is offered by a combination of wooden and iron bevel wheels, as employed, for instance, for the 220 HP turbines of the Lapa plant in Brazil, and having a gear ratio of 110 to 500 r. p. m. In most cases, however, precision gears with spur or bevel wheels are preferred for high outputs, speeds or gear ratios, as their more accurate production and lubrication ensures better efficiencies, longer life and silent running. These points were considered of primary importance in designing the plant of the Obermühle power station of the Fürstenfeldbruck [1]), where the 254 HP output of a 160 r. p. m. propeller turbine is transmitted by means of a spur wheel gear to the generator mounted on the gear casing.

If, on the other hand, the conditions are more favourable for direct coupling, as in the case of the Blumenau plant in Brazil, having an output of 2050 HP at 214 r. p. m., or the Garneau power station in Canada, illustrated in Fig. 2, with an output of 3500 HP at 180 r. p. m., then this arrangement is given the preference owing to the greater simplicity and reliability in service due to the elimination of the intermediate gears. In spite of the high head of 35 to 31 feet, by adopting a special design, the guide apparatus of the latter turbines could be arranged for internal regulation, which reduced the costs of the machines and also of the building due to the provision of rectangular water chambers in place of the concrete spirals customary with external regulation. In addition the normal concrete bend in the Garneau plant was substituted by the trumpet-shaped Prasil draught tube having a reinforced concrete cone.

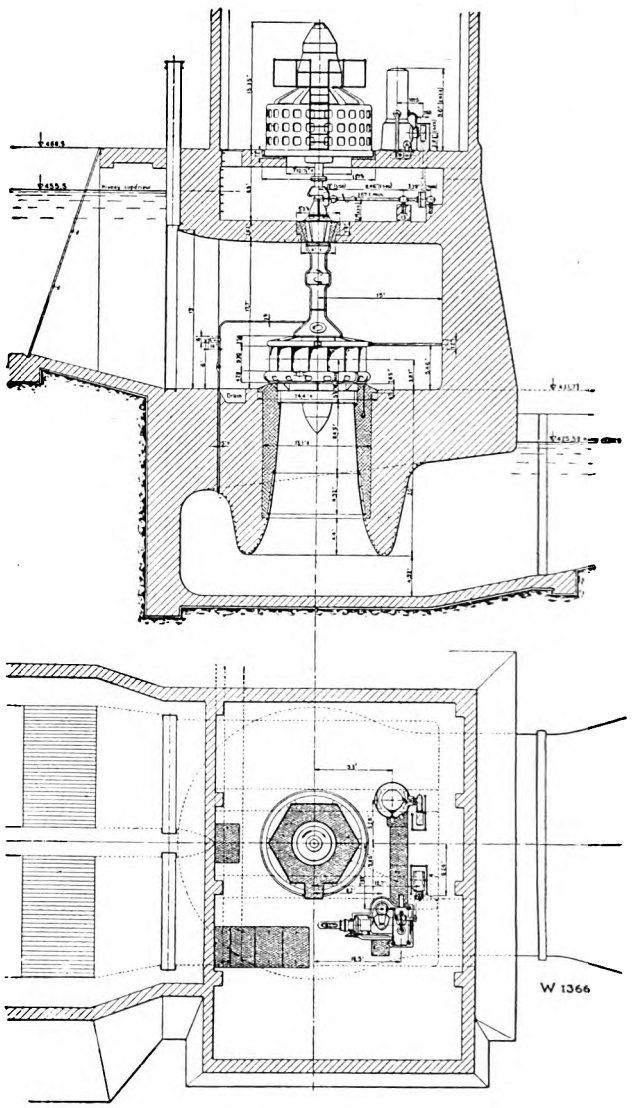

Fig. 2. Sectional elevation and plan of Garneau plant.

[1]) See Figs. 9 to 12 of the article by G. Grossmann: "Geared vertical water turbines for small and medium outputs", Escher Wyss News No. 6/1928.

Digitized by Google

The first large plant of this kind was installed at the Steinbach-Kachlet power station, connected to the Rhine-Main-Danube Canal, in which 8 propeller turbines, each for an output of 9500 HP at 75 r. p. m. under a head of 30 feet were erected, part of which

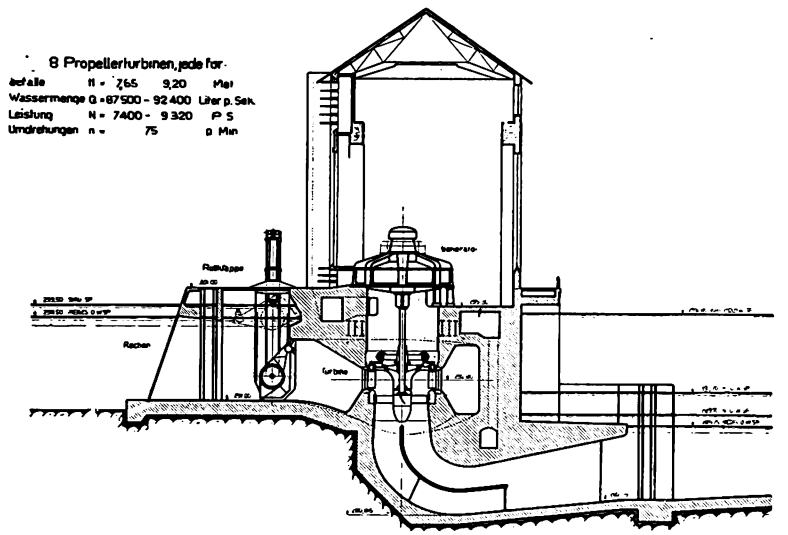
8 Propellerturbinen, jede für
Gefälle H = 7,65 9,20 Met
Wassermenge Q = 87500 - 92400 Liter p. Sek.
Leistung N = 7400 - 9320 PS
Umdrehungen n = 75 p. Min
Rollklappe
Rechen
Turbine

Fig. 3. Sectional elevation of the Steinbach-Kachlet power station. Gefälle = head; Wassermenge = water volume; Leistung = output; Umdrehungen = speed; Rechen = grating; Rollklappe = roller gate.

were supplied by Messrs. Escher Wyss & Co. Fig. 3 is a sectional elevation of the machine house and forebay equipment. These turbines were equipped with external regulation, the servomotors operating the guide apparatus being mounted on the turbine covers and engaging directly the regulating ring.

Although propeller turbines satisfy the requirements of high speed and high capacities, they are not so favourable as regards efficieny. A glance at the diagram illustrated in Fig. 4 shows us that at partial loads the propeller turbines are decidedly less favourable than Francis turbines and when employing the former a point should be made of operating them at the peak of the efficiency curve, i. e. with an admission of about 95 per cent. If, however, the runner wheel blades are made to turn, then for each position of the guide blades the runner wheel blades may be adjusted to the most advantageous position, resulting in a very flat characteristic. Professor Kaplan of Brünn (Czechoslovakia) was the first to adopt this design.[2]) The leading turbine builders by persevering study and tests have within a very short time managed to raise the efficiencies of Kaplan turbines to such an extent that according to Fig. 4 they are at all points higher than the efficiencies of very low-speed high-pressure Francis turbines, in spite of the fact that the latter have also been continually improved within recent years.

Within a comparatively short time quite a

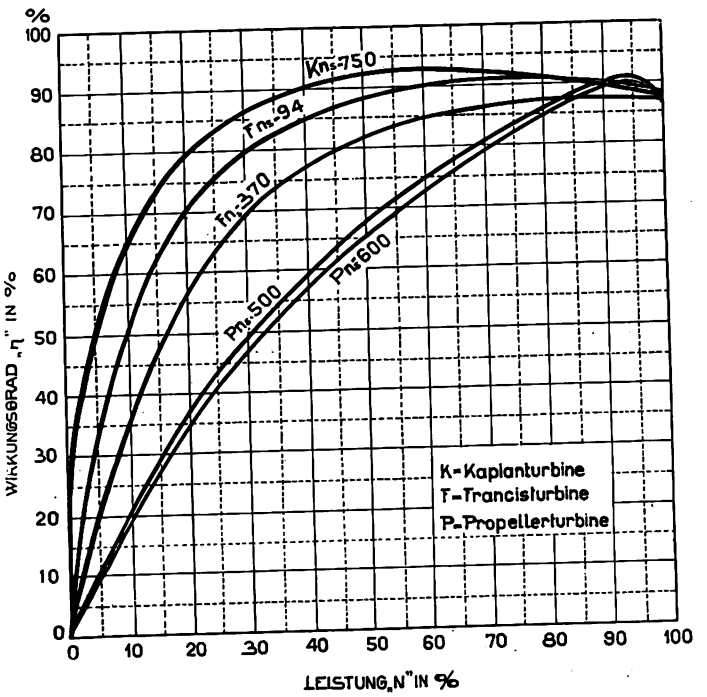

Fig. 4. Efficiency curves for Francis, propeller and Kaplan turbines. Wirkungsgrad = efficiency; Leistung = output.

[2]) See "Wasserkraft-Jahrbuch", Vol. 1925/26 and 1927/28.

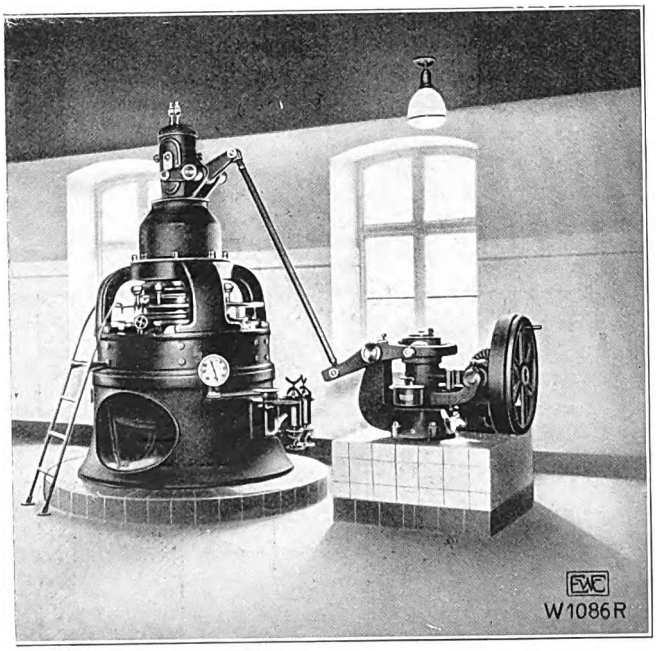

Fig. 5. Reinbek-Holstein power station.

Digitized by Google

number of Kaplan turbine plants have, therefore, been erected. In some special cases, direct coupling was feasible even at small outputs, for instance in the plant for the Municipal Electricity Works Reinbek-Holstein and Chemnitz, where the direct current generators, whose speed anyway could not be made too high owing to the commutator design, are driven in this manner. Fig. 5 illustrates the compact design of the Reinbek machine. The guide wheel and runner wheel blades are adjusted by hand; an emergency switch, fixed on the turbine shaft, closes the turbine with the aid of a motor operated by current from a battery.

In other cases, the great difference between the water levels of the head race and tail race resulted in turbines of comparatively small runner wheel

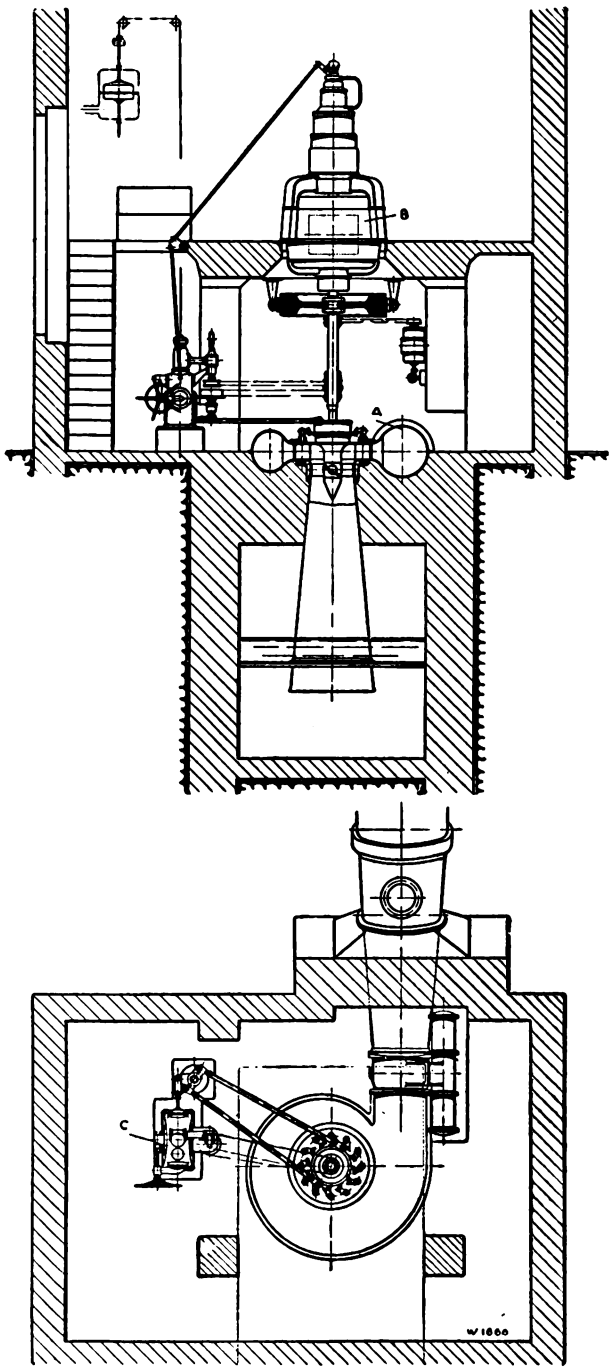

Fig. 6. Kaplan spiral turbine in the Mylau Electricity Works

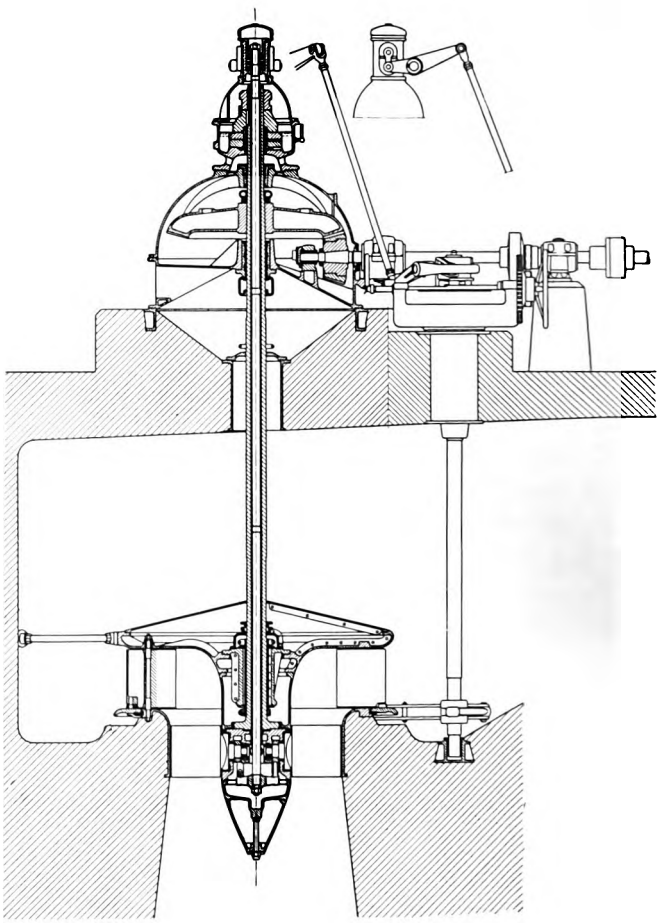

Fig. 7. Kaplan turbine with bevel wheel gear for the Lottin power station in Pommerania.

diameters and high speeds, for instance in the Aach power station Arlen in the Hegau, whose output is 555 HP at 500 r. p. m. under a head of 32 feet, and in the Dümlinghausen plant situated near the compensating pond of the Agger Valley barrage. In this latter plant, a Kaplan turbine with a maximum capacity of 520 HP at 428 r. p. m. under a head of 34 feet utilizes the water of the lower storage basin of a high-pressure plant operating during the day

Digitized by Google

only as peak load station, which plant was also executed by Messrs. Escher Wyss & Co.

The smallest Kaplan turbine with adjustable blades hitherto supplied by our firm is erected in the Municipal Electricity Works of Mylau and has a runner wheel diameter of only 26″. It has a speed of 600 r. p. m. and is directly coupled to a generator. Fig. 6 shows this vertical shaft spiral turbine in cast-iron casing arranged for external regulation.

With low heads and small outputs for three-phase power stations the interposition of a precision gear with bevel or spur wheels is the most economic solution, even when Kaplan turbines are used. Fig. 7 illustrates such an arrangement for the Lottin plant, in which the runner wheel and guide wheel blades are adjusted by hand whilst the turbine is running,

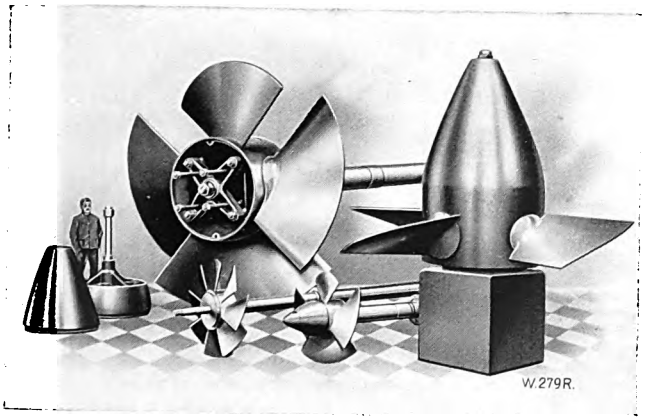

Fig 8. Propeller and Kaplan wheels in the workshop.

and an emergency switch shuts down the turbine in the event of racing. The design of the hand-operated adjusting mechanism for the runner wheel is shown in the sectional drawing of the 80 HP turbine of the Municipal Electricity Works Güstrow in Mecklenburg. [3]) Above the thrust bearing is fixed an adjusting sleeve turning in a double ball race, to which the regulating mechanism is attached by means of levers. The workshop photograph of different types of Propeller and Kaplan runner wheels, Fig. 8, also shows the cast-steel cross piece in the hub, which by means of straps engages the levers fixed to the pins of the cast-steel blades, supported in bronze bushes. The hub is filled with viscous oil. The cross piece is fixed to the lower end of the adjusting rod passing through the hollow turbine shaft. The automatic runner wheel adjusting mechanism for the turbine supplied to the firm of Wolle in Aue (Saxony) [4]) with the runner wheel servomotor arranged between the gear and the turbine shaft flange is described further on under the Ladenburg plant.

As an example of a Kaplan turbine with spur wheel gear we would mention the Munderkingen station of the Upper Swabian Electricity Works [5]), where 629 HP at 83.3/750 r. p. m. have to be transmitted. Under a head of only 7¾ feet this turbine deals with 5622 gallons of water per second in a runner wheel of nearly 10 feet diameter. Since with Kaplan turbines the recovery of head in the draught tube plays a much more prominent part for attaining a better efficiency than with Francis turbines, special attention must be paid to the design of these draught tubes. Its vertical portion must be reduced to a minimum as well as its length. To reduce the depth of the foundations in the Munderkingen plant, therefore, the guide apparatus was arranged very high up in the chamber. The replacement of the guide blades is facilitated by the provision of an easily accessible sheet-metal shaft or pit, which also facilitates the dismantling of the runner wheel with the aid of the machine room crane. The runner wheel is adjusted by hand whilst running.

Direct coupling of the machines was adopted when reconstructing the Blesen plant of the Meseritz-Schwerin power station on the eastern German frontier, for which two propeller turbines of 612 HP output each with fixed runner wheel blades, and an 872 HP Kaplan turbine with hand operated runner wheel blades were supplied by Messrs. Escher Wyss & Co. The propeller turbines operate within the range of highest efficiency, i. e. at practically full load, whilst the Kaplan turbine looks after the partial loads and small quantities of water as its governor is more sensitive to load fluctuations. This plant is especially interesting inasmuch as three existing horizontal shaft generators were reconstructed into vertical shaft generators, the Kaplan turbines running at 250 r. p. m. permitting direct coupling.

Likewise in the Greisitz plant of the Bober power station Sagan it has been decided to utilize small quantities of water with a better economy and to increase the reliability of the installation by erecting a Kaplan turbine for external regulation and direct coupling in an existing concrete spiral casing, whilst

[3]) See Figs. 3 and 4 of G. Grossmann's article in Escher Wyss News No. 6, 1928.
[4]) See Figs. 5 and 6 of same article.
[5]) See Figs. 13 and 14 of same article.

Digitized by Google

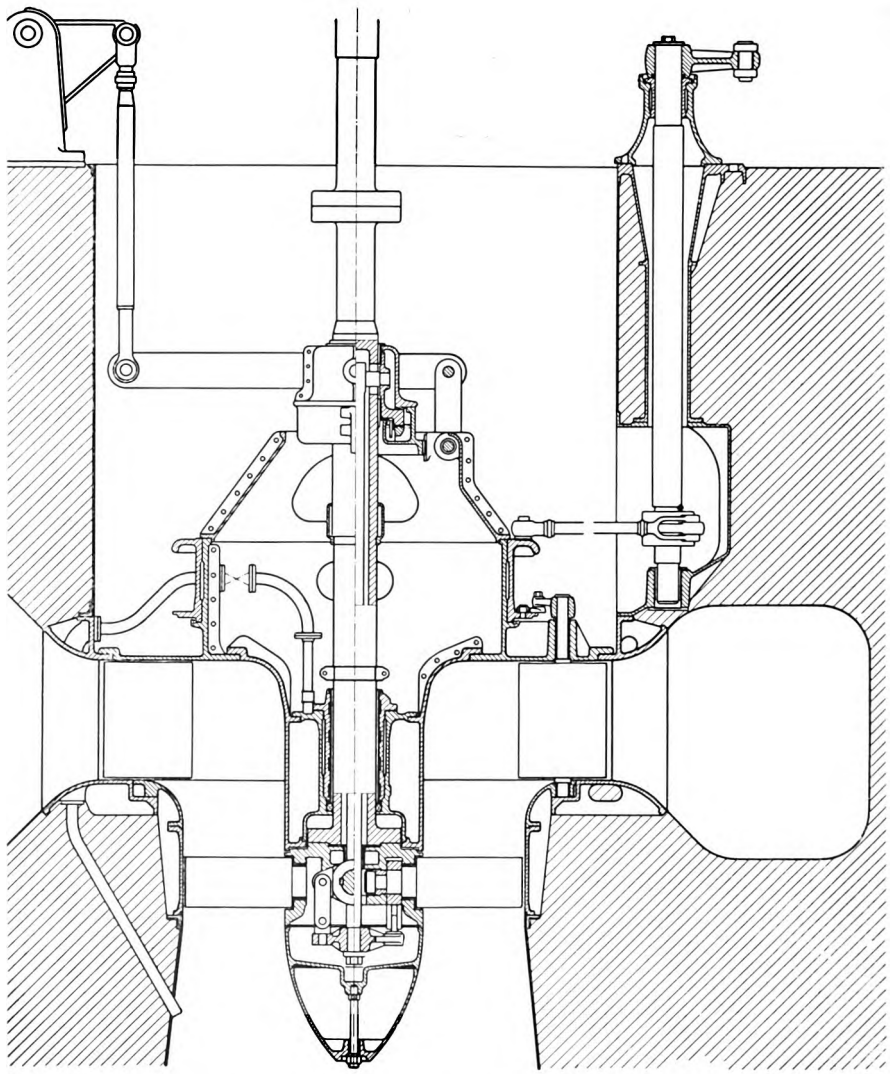

Fig. 9. Sectional elevation of the Waldenburg turbine.

two existing Francis turbines drive horizontal generators by means of cast-steel bevel wheel gears. The existing conditions in the building had to be duly considered during the execution of this work. The Kaplan turbine has an output of 1080 HP at 150 r. p. m. and will be equipped with automatically operating mechanism for adjusting the runner wheel and guide wheel blades, thereby curtailing supervision costs.

Quite a number of solutions have been found for the design of the automatic runner wheel adjusting mechanism. In the case of the Waldenburg plant, Fig. 9, in which a 1135 HP 150 r. p. m. turbine and a 580 HP 214 r. p. m. turbine were installed, the runner wheel servomotor adjoining the governor engages underneath the generator clutch by means of a rod and a sleeve with a double sided thrust bearing, so that only the turbine shaft has to be made hollow. The latter is provided with two slots in which the pins of the adjusting rod move. This design will generally be adopted for such reconstruction work where an existing generator with solid shaft is to be utilized and the adjusting gear cannot be mounted on the spider of the generator.

The adjusting sleeve was entirely dispensed with in the Donaustetten plant, shown in section in Fig. 10 for which Messrs. Escher Wyss & Co. supplied two 1850 HP Kaplan turbines at 214 r. p. m. under a head of 26 feet. The servomotor lies in an extension of the adjusting rod, and its piston rotates within the cylinder being rendered tight by means of self-expanding rings. This design offers advantages in all cases where the servomotor influencing the runner wheel blades would otherwise be inaccessible, or where, as in the Maulburg plant of the Steinen weaving mills (Baden), Fig. 11, a combined hand-

Digitized by Google

operated and automatic adjustment is desired in order to increase the reliability of the plant. Here the double ball bearing required anyway for the hand-operated adjusting mechanism was provided in the servomotor piston, so that the latter does not rotate in this case. By means of a lever, the hand-operated adjusting mechanism may be cut in or out at any moment.

This design has lately also been readopted to relieve the thrust bearing of the above-mentioned automatic Dümlinghausen plant, when starting. The piston of the runner wheel servomotor by means of high oil pressure raises all rotating parts just a little until the film of oil between the discs of the thrust bearing has been formed.

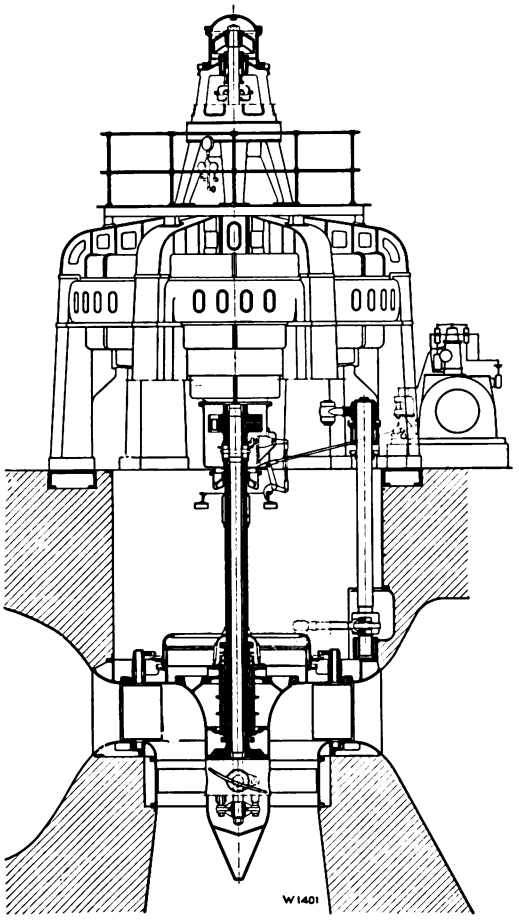

Fig. 10. Sectional elevation of Donaustetten plant.

To shorten the adjusting rods and to eliminate the rotary piston not having a special thrust bearing, a third solution was applied to the Ladenburg station of the Neckar-Aktiengesellschaft in Stuttgart, Fig. 12. This solution may be considered normal and except for minor modifications has been employed in all the plants hereinafter mentioned. The runner wheel servomotor is fixed between the coupling flanges of an extension to the turbine shaft down in the pit, only the oil supply casing remaining above the exciter. The hollow generator shaft and upper turbine shaft serve to conduct the oil to the upper side of the piston, whilst the lower side is fed with oil from a tube fixed inside the piston. This internal tube thus follows the movements of the latter and at the same time actuates the relay of the runner wheel control valve. This arrangement offers the additional advantage that the thrust bearing is not further stressed by the adjusting force of the runner wheel blades, as in all other cases.

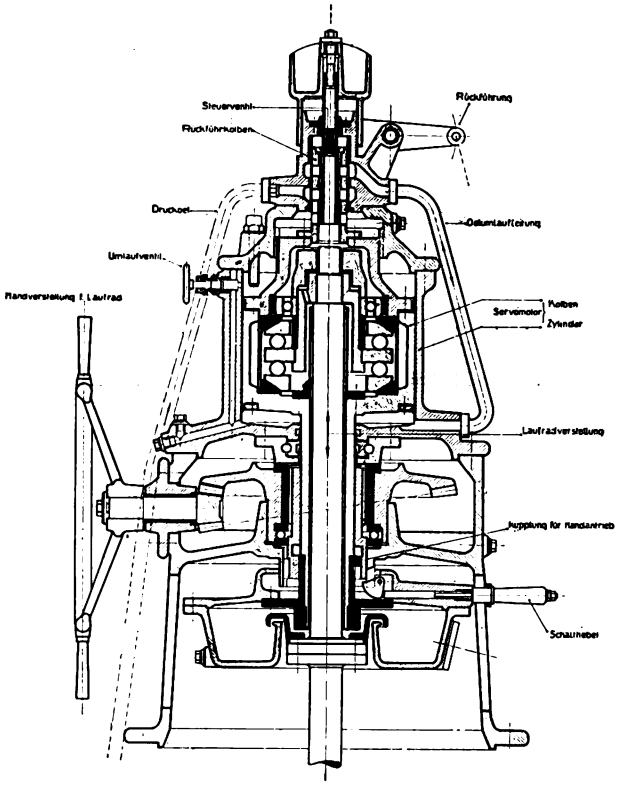

Fig. 11 Runner wheel adjusting mechanism for Maulburg plant.
Steuerventil = control valve; Rückführung = relay; Rückführkolben = relay piston; Druckoel = oil under pressure; Oelumlaufleitung = oil circulating pipe; Umlaufventil = bye-pass valve; Handverstellung f. Laufrad = Hand-operated adjusting mechanism for runner wheel; Kolben = piston; Zylinder = cylinder; Laufradverstellung = runner wheel adjusting mechanism; Kupplung für Handantrieb = clutch for hand drive; Schalthebel = switch lever.

In the Hengstey I plant of the Rhenish Westphalian Electricity Works, for which Messrs. Escher Wyss & Co. supplied two Kaplan turbines with movable blades and a propeller turbine with fixed blades, each for an output of 1400 HP at 125 r. p. m. under a head of 16 feet, the runner wheel adjusting mechanism contains yet a further modification, inasmuch as the upper oil supply, as may be inferred from Fig. 13, is effected through two tubes, one contained within the other, in order to obviate eventual untrue running of the shaft end affecting the

Digitized by Google

stuffing boxes and to prevent spraying the exciter with oil.

The lower part of the runner wheel adjusting mechanism is shown in section in Fig. 14, which also illustrates the arrangement of the runner wheel servomotor between the turbine shaft and generator

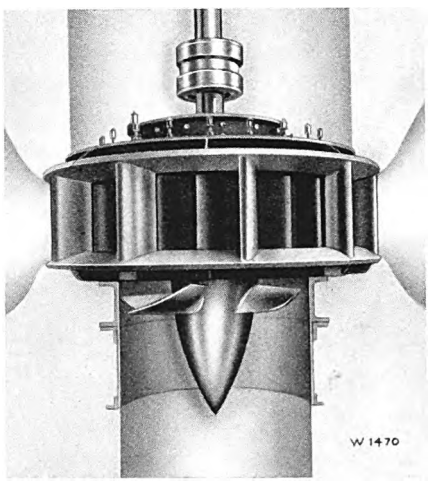

Fig. 12. Kaplan turbine with automatic runner wheel adjustment for Ladenburg station.

shaft flanges, the design of the hub and finally the design of the guide apparatus with external regulation. Fig. 15 is a sectional elevation of the complete plant. The directly coupled generator rests on cast iron feet as in most plants executed by

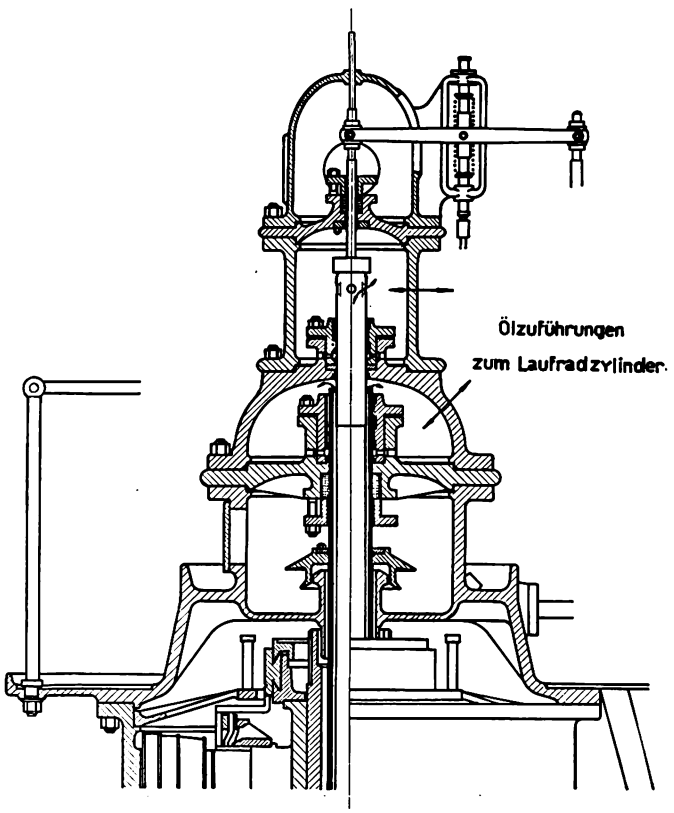

Fig. 13. Upper oil supply for runner wheel Hengstey I.
Oelzuführungen zum Laufradzylinder = oil supply for runner wheel cylinder.

Messrs. Escher Wyss & Co., so that an intermediate floor is unnecessary and the height of the building is reduced.

The same client subsequently decided to equip the second dam, Hengstey II, with a power station fitted with Kaplan turbines. Since the maximum head amounts to 11 feet, only internal regulation for the guide apparatus was justifiable, in spite of the large dimensions of the turbines. At 1000 HP output, the turbine speed only equals 68 r. p. m., so that spur wheel speed-increasing gears to 750 r. p. m. were interposed between the turbines and generators, see Fig. 17. All three turbines are equipped with automatic double regulation with separate control gear for the runner wheels and guide wheels, so that each of them can be separately closed whereby double safety is ensured. The inlet sluices could, therefore, be dispensed with and were replaced by iron plates, which may be inserted by the aid of the machine house crane when necessary. The plant can be started up by remote control from the Hengstey I station in a similar manner as the Affoldern station described hereunder.

The Affoldern plant, situated beyond the power storage plants of Hemfurth and Bringhausen on the Eder Valley barrage, which latter are equipped with storage pumps furnished by Messrs. Escher Wyss & Co., contains a Kaplan turbine supplied by the same firm and can operate automatically. The plant is started up by remote control from the Hemfurth station.

Under a head of 30 feet the turbine, designed for external regulation, develops approximately 3400 HP. When starting the plant, the asynchronous generator, whose excitation current is supplied by a separate motor-generator, runs as motor. The guide blades are closed by the governor only so far as corresponds with their no-load position so that the turbine is always ready for starting. The control cam governing the runner wheel adjustment is so designed that after closing down the turbine the runner wheel blades take up their starting position. The governor needs, therefore, to function only after starting up, i. e. when taking up the load, so that the oil pump may be driven by a belt from the turbine shaft. In case of a failure of the pump or pendulum drive, the governor stops automatically. Should a dangerous condition of running occur, an emergency drop sluice automatically shuts down the whole plant. An electrically-operated travel limiting device permits a certain adjustment to the quantity of water for the Affoldern turbine according to cali-

Digitized by Google

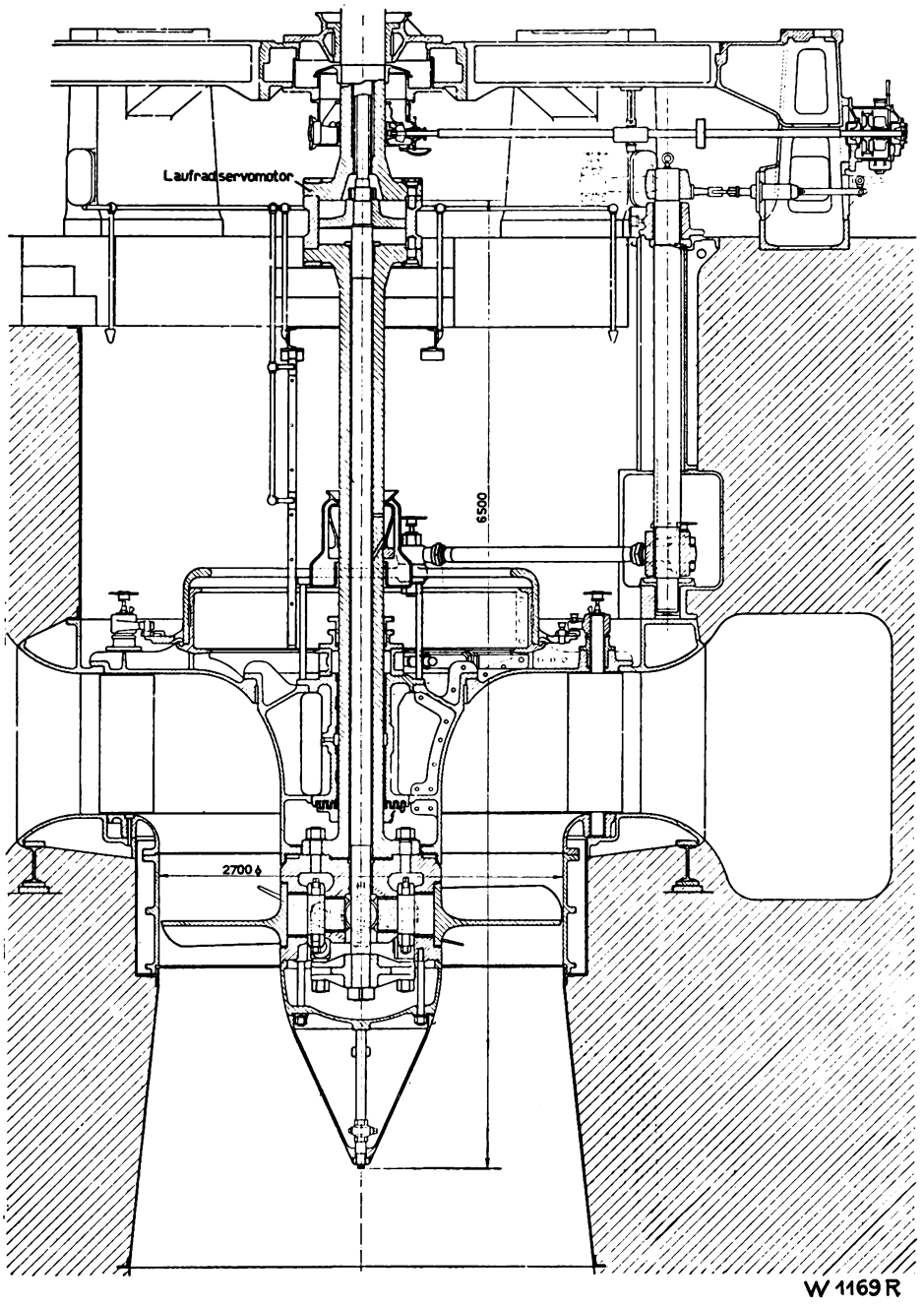

Fig. 14. Sectional elevation of Kaplan turbine for Hengstey I station.

bration curves by means of remote control from the Hemfurth station.

The highest head of 60 feet utilized at the time being in Germany by a Kaplan turbine will be in the power station Tannheim on the Iller, where three Francis turbines were installed by Messrs. Escher Wyss & Co. in 1921, which are now to be supplemented by a Kaplan turbine of 4440 HP at 300 r. p. m. absorbing 777 cub.ft. of water per second. In view of the high flow velocities in the spiral casing, the latter will be armoured with sheet metal. To avoid cavitation, the runner wheel will be arranged somewhat under the level of the tail race, as with all Kaplan turbine plants operating under high heads and with comparatively high specific speeds.

The most important large power station of Bavaria to be exclusively equipped with Kaplan turbines, will be the Uppenborn power station of the Munich Municipal Electricity Works. Three main turbines, each of 1200 HP output at 125 r. p. m. under a head of 48 feet, and a house turbine of 1500 HP at 300 r. p. m. will be installed. The design of the guide apparatus of the large turbines corresponds with that of the Kachlet plant, inasmuch as two servomotors mounted on the guide wheel cover

Digitized by Google

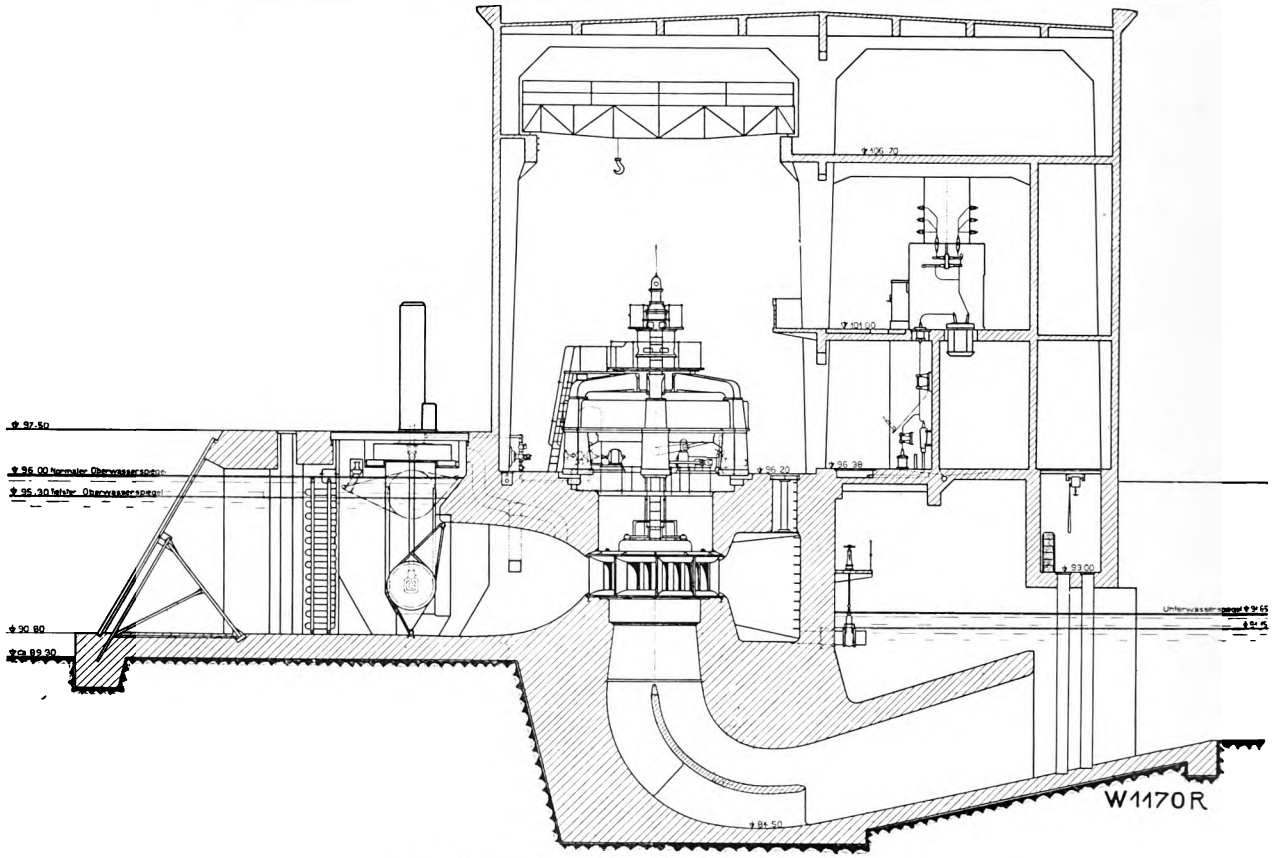

Fig. 15. Sectional elevation of Hengstey I plant.

directly engage the regulating ring of the guide apparatus. The servomotor influencing the runner wheel is fixed in between the coupling flanges of the two parts of the turbine shaft. The oil is fed from above through the hollow generator shaft as in the Hengstey I station. Although the Uppenborn plant does not contain hydraulic emergency sluices for closing the turbine chambers, it was decided to adopt independent adjustment of the runner wheels and guide wheels by means of two separate actuators in order to create a further safety against racing. Each turbine is equipped with its own electrically-driven oil pump with an air vessel, for the simultaneous supply of oil under pressure to the runner wheel and guide wheel servomotors. Elaborate tests were made principally to determine the design of the draught tubes, which resulted in a reduction of the height of the vertical portion of the latter. The head

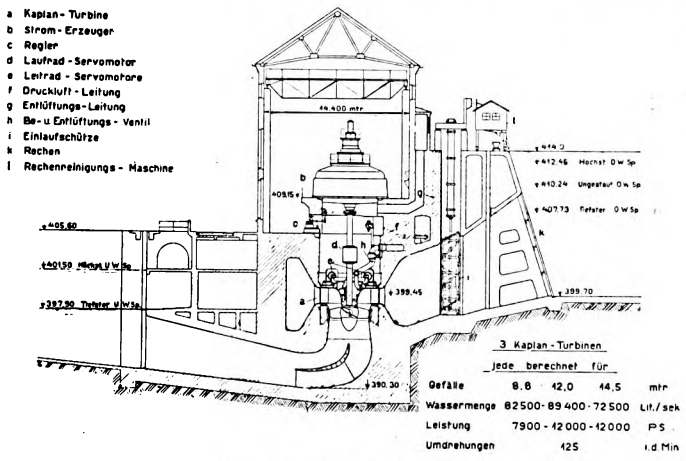

Fig. 16. Sectional elevation of Uppenborn power station.
a Kaplan turbine; b Generator; c Governor; d Runner wheel servomotor; e Guide wheel servomotor; f Compressed air piping; g Ventilation; h Priming valve; i inlet sluice; k Grating; l Grating clearing machine.

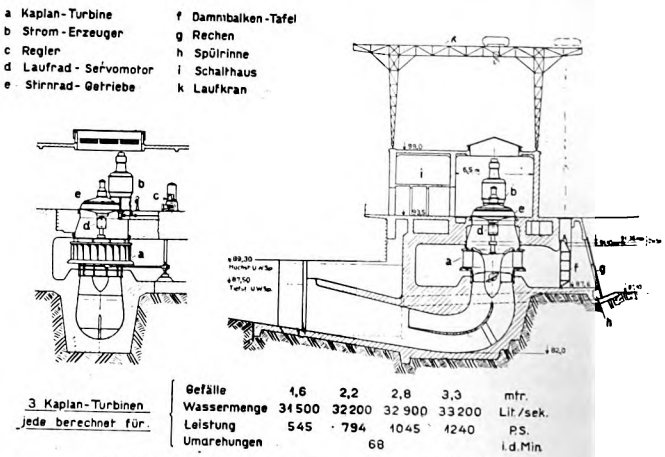

Fig. 17. Sectional elevation of Hengstey II plant.
a Kaplan turbine; b Generator; c Governor; d Runner wheel servomotor; e Spur wheel gear; f Dam beams; g Grating; h Flushing channel; i Switch room; k Travelling crane.

Gefälle = Head; Wassermenge = Water volume; Leistung = Output; Umdrehungen = r. p. m. — 4.5 lit = 1 gallon.

Digitized by Google

race has a large storage capacity of about 90 000 kW-hrs when the water level is lowered by about 15½ feet, so that it is possible to lower the level of the storage basin during peak loads and to bank it up again when the current consumption in the network is small. In the latter case the turbines are stopped simply by closing the guide apparatus without the aid of sluices. Since the generators then have to run as phase advancers, the tail race water level in view of the low position of the runner wheels is depressed by means of compressed air far enough as to allow the turbine wheels to run free in the air. Changing over from current production to phase advancing may thus be performed in the shortest possible time.

The following Kaplan turbines, which are in course of construction, will have the same dimensions as the Kachlet turbines, but they will be provided with automatically adjusted runner wheel blades and their outputs will be considerably smaller:

The Kaplan turbine for the Neckargemünd station near Heidelberg designed for 2825 cub. ft. of water per second under a head of 13 feet; the two turbine sets for the Klingenberg power station, situated upstream from Aschaffenburg, each for an output of 2345 HP under a head of 11 feet, and finally the three turbines for the Eddersheim plant near Frankfort on Main, each for a capacity of 2225 cub. ft. of water per second under a head of 11 feet. The operating speeds of only 75 and 68 r. p. m. are very low even for Kaplan turbines. In spite of this, direct coupling with the generators has been adopted.

The experience gained with the propeller and Kaplan turbines in service to date has confirmed the efficiency and reliability of this new type of turbine, as determined by test bed results, and substantiates that the Kaplan turbine is able to satisfy the three requirements mentioned at the beginning of this article.

The hydro-electric power station of Akanogawa No. 1.

By W. Winkler.

In the following a brief description of a hydro-electric generating station will be given which, although not being record breaking as far as developed output is concerned, represents an example of a low head installation subject to great variations in the tail race level typical for Japan and special reference will be made in this article to the hydraulic epuipment of this plant which has been supplied by Escher Wyss & Co., Zurich.

The Akanogawa No. 1 Power Plant belonging to the Toshin Denki K. K., Tokyo, has been built

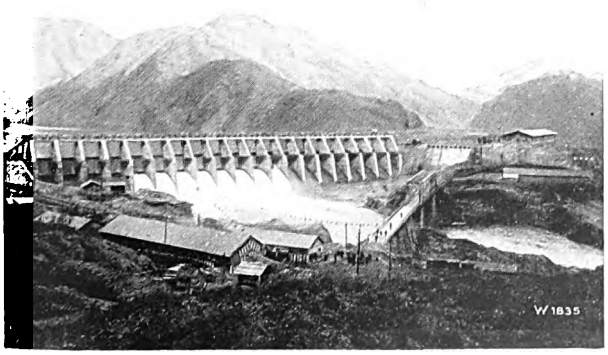

Fig. 1. Dam through the Akanogawa River.

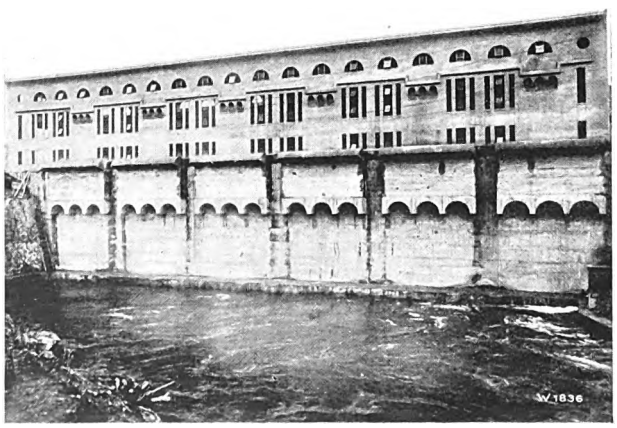

Fig. 2. View of machine house.

Digitized by Google

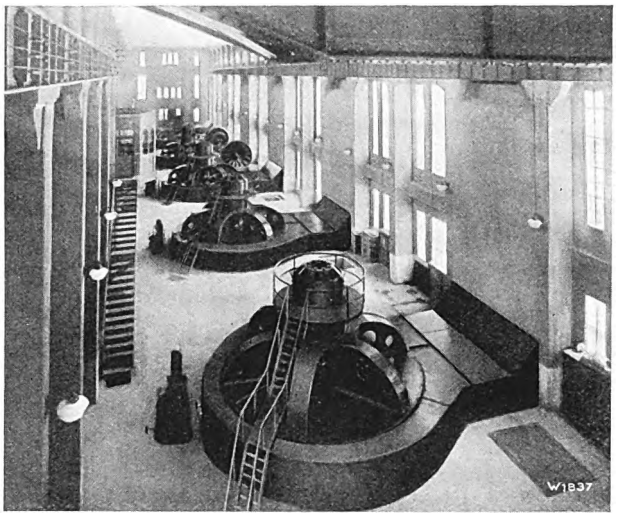

Fig. 3. View of the generator room.

adjacent to a dam across the river Akanogawa, Niigata Prefecture and the power generated in this hydro-electric development is transmitted to Tokyo over a transmission line of 167 miles built by the Tokyo Electric Light Co. The water quantity which can be stored in the pondage even in the case of low water is ample for generating 40.000 KW. for 4 hours and 16.000 KW. for 20 hours per day.

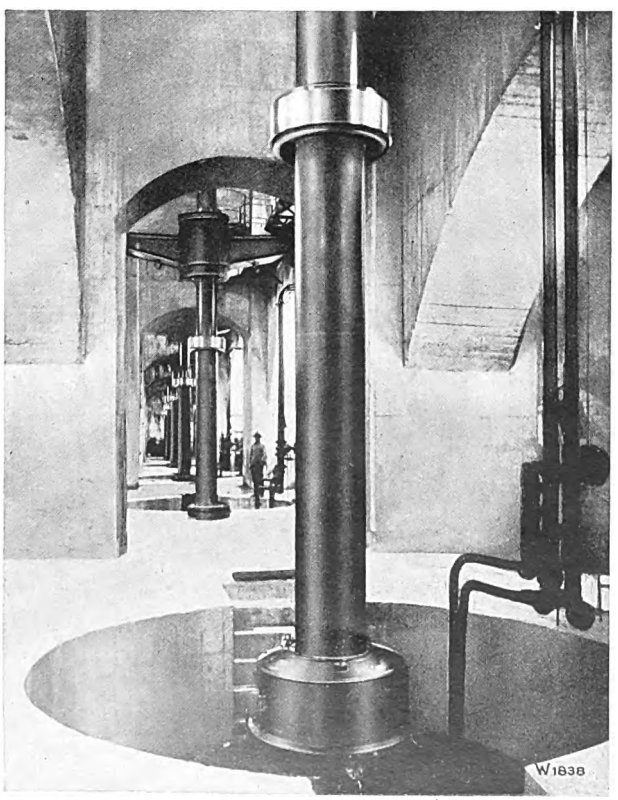

Fig. 4. View of the turbine room.

In the power station six vertical Francis turbines designed for a maximum output of 13.0000 HP and a normal speed of 150 r. p. m. are installed which are directly coupled to 50 cyc. A. C. generators. The normal available effective head is 74 ft., however, in view of the fluctuation in the tail race and the forebay same varies usually between 67 and 77 ft. Exceptionally at times of flood the tailrace level may rise as high as 50 ft. above normal and, therefore, the generator floor has been arranged at elevation 239 ft. respectively 59 ft. above the normal tail race level and 50 ft. above the turbine center. Most of the Japanese rivers are characterized by sudden and enormous variations in the water quantity and in order to prevent flooding of the electric machinery in most power plants the generators have to be placed high above the normal tail race level. This is one of the principal reasons why in Japan almost all important Francis turbine installations are equipped with vertical units.

In the Akanogawa No. 1 Power Station the water is supplied to each turbine by an individual steel plate penstock having a mean diameter of about 13¼ ft. Only one inlet sluice gate has been provided for each pipeline but no other valves are arranged before the turbines. The turbines have spiral casings with 11 ft. inlet diameter made of steel plates which in view of the rather large dimension have been riveted together on site. The casings are riveted at the inner circumferences to heavy cast steel speed rings designed with substantial vanes to withstand the stresses due to the internal water pressure and the compression due to the superimposed parts. The casings are entirely concreted in and it might be

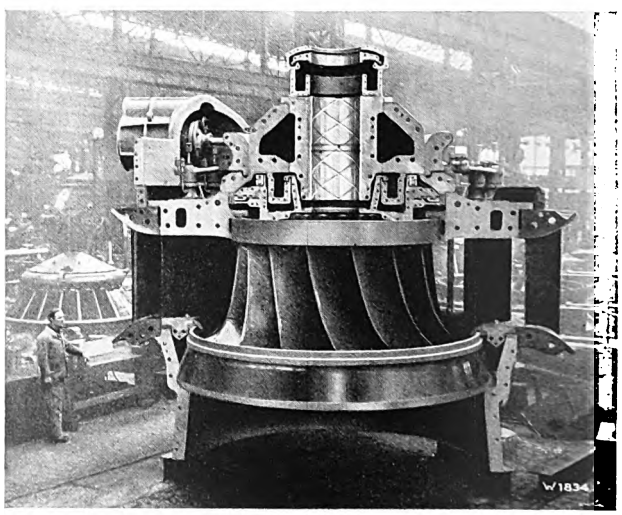

Fig. 5. One of the 13100 HP Francis turbines during assembly in the workshops.

Digitized by Google

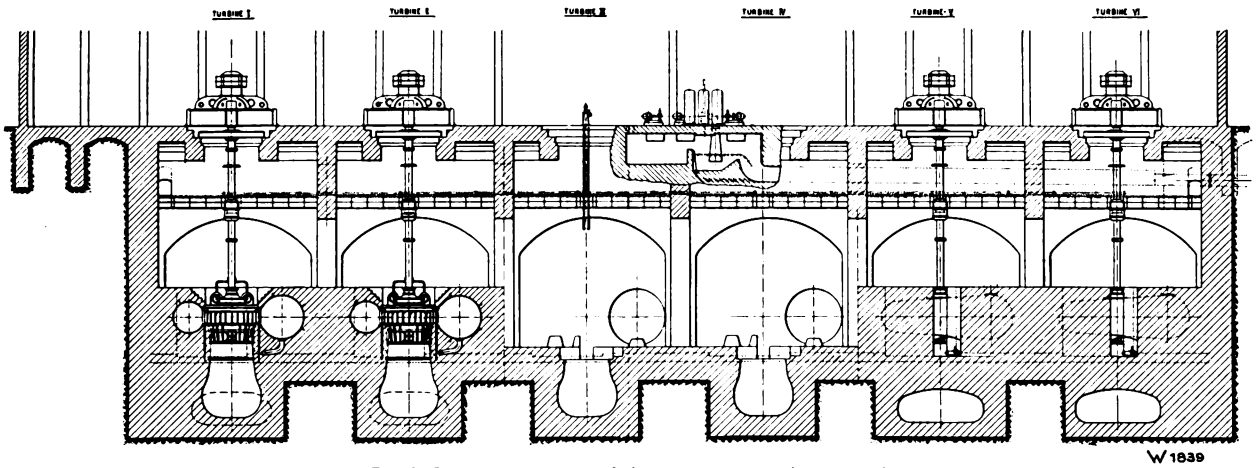

Fig 6. Sectional elevation of the turbine plant Akanogawa I.

especially mentioned that the general outline of the power station is such that with the exception of the concrete forming the turbine floor no additional weight from the superimposed structure and of the generators has to be carried by same.

The runner wheels of comparatively high specific speed are made of special cast steel with cast-in steel vanes and have a maximum outside diameter of 13 ft. It would have been of advantage to reduce the number of prime movers in this plant, however, it was unfortunately not possible on account of the small tunnel profile of the Government railway on which the machines had to be transported to the site and it must further be mentioned that runner wheels split in halves were not favoured in this case.

The construction of the turbines has been dominated by consideration of simplicity, robustness, durability and accessibility in order to secure maximum dependability and freedom from shutdowns. All working parts have been so arranged as to most readily permit inspection, adjustment and if necessary replacement of parts subject to wear. To ensure perfectly smooth running of the turbines, oil lubricated guide bearings with high grade babbit metal have been provided, which are arranged as near as possible to the runner wheels. Instead of ordinary old-type gland stuffing boxes, a special construction has been employed, which under any circumstances prevents water entering the bearings and overflowing of the turbines even in case of extreme rise of the tail race water level. For each turbine guide bearing individual lubrication is provided, the oil leaving the bearing being collected in a tank arranged around the lower part of the bearing and from same it is pumped up by means of a pump driven from the turbine shaft by means of a precision gear into a tank on top of the bearing. From this upper tank the oil overflows by gravity into the bearing without requiring any cooling in view of the low speed at which the turbines run.

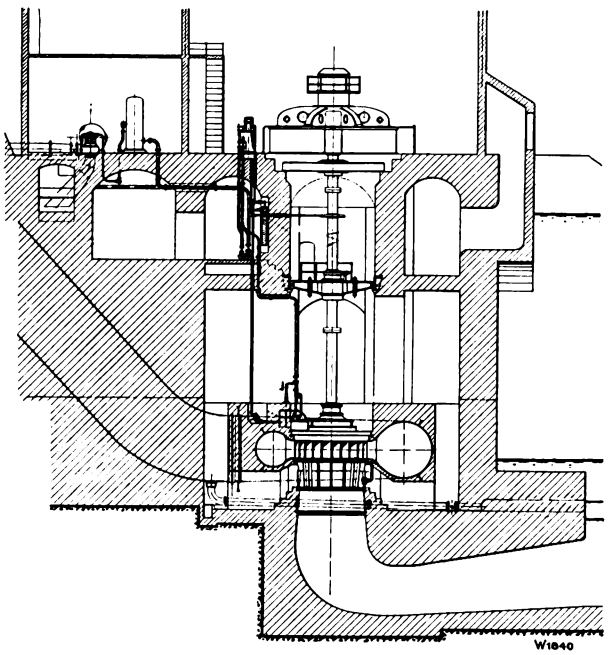

Fig. 7. Sectional elevation of a turbine of the Akanogawa I plant.

Digitized by Google

For the operation of the guide apparatus separate oil pressure servomotors are provided, same being embedded in the concrete foundation and moreover connected with the turbine cover.

As already mentioned above, the generators are located 50 ft. above the turbine centers which fact necessitated splitting of each turbine shaft into two sections and also an intermediate bearing between turbine and generator. These intermediate bearings are of the white metal type, the individual oil pumps for same being also gear-driven from the turbine shaft and the construction of same is similar to that of the guide bearings arranged on top of the turbines. Each intermediate bearing is placed on a heavy cast iron supporting girder securely anchored in the foundation and for facilitating inspection a platform is provided around each bearing and in addition a gallery connecting the intermediate bearings of all six units.

The actuators of the speed governors are of the latest type developed by Escher Wyss & Co. and are located on the generator floor. Similar as in numerous other installations also in the Akanogawa Power Station the result obtained proved the high qualities of the new Escher Wyss governor. All units after having been started up passed immediately the Government test without requiring the slightest adjustment on the actuators. Their excellent performance, especially the very favourable quick and smooth speed regulation and the absolute steady speed control at no-load running, permitting thus of easy synchronizing with other units, aroused the greatest interest of the experts.

The oil pressure for operating the turbine guide apparatus is produced in a central system located on the generator floor safely above the highest flood level. The pumping group consists of two geared oil pumps driven by a small water turbine arranged between same and also coupled to electric motors at the remote end of the pumps. The turbine is of the horizontal single discharge propeller type and the speed of 1000 r. p. m. obtainable with same permits direct coupling with the oil pumps. Of course the couplings between the turbine pumps and the motors are arranged for engaging and disengaging during operation. In addition to the before mentioned two oil pumps, a third pump rigidly coupled to an electric motor is provided as spare. These oil pumps are connected with three pressure tanks of ample capacity which have automatic relief valves allowing the pumps to run freely when oil supply is superfluous.

The Akanogawa No. I installation was put into commercial service by the end of last year immediately after the Government tests were made and since that time the turbines have been running to the entire satisfaction of the clients.

Digitized by Google

Foudrinier paper-making machine for high-class papers.

By O. Jung.

« Fine paper » is an expression covering a wide range of manufacture without precise limitation. All kinds of papers with their manifold denominations, from the wood - free note paper to the high - class paper employed for special technical purposes, fall under this general expression. If we further bear in mind that such papers are partly manufactured in Foudrinier- and partly in cylinder mould machines, then we are able to realize that the differences in the innumerable kinds of fine paper are indeed considerable.

The requirements of the paper consumers in regard to composition of the stuff for an individual paper and the possibilities of its further treatment are unequivocally reflected in the demands stipulated by the paper manufacturer for the complete equipment of his paper mill. Especially the beaters and the paper-making machine proper must be able to satisfy all requirements.

The mills producing exclusively fine paper do not as a matter of fact fall under the heading of mixed mills (see the article on a modern combination cardboard-making machine published in « Escher Wyss News » No. 3, 1929). Nevertheless the kinds of papers chiefly manufactured in these mills are of such a varied nature that when buying a new fine paper machine it is essential to design it to satisfy the manifold needs of the market in the best possible manner. In order to be able to manufacture efficiently the special papers required for technical purposes, the valuable experience of the paper manufacturer, who is best able to eliminate faulty designs in previous plants, must certainly be taken into account. It will not be questioned that the paper manufacturer is the most competent person to make useful suggestions regarding modifications and improvements to the paper-making machine, be it to facilitate and simplify the attendance, or to obtain a better product, or finally to increase the quantity produced. It is certainly the duty of engineering works and especially of the designers to examine the suggestions and wishes of the paper maker and to embody these in their constructions.

In many mills, especially in those occupied with the production of fine papers, much valuable information is withheld from the engineer in order to safeguard manufacturing secrets. Although in all countries the patent and trade mark laws offer a security against imitations or infringements, yet they have the disadvantage of publicity and consequently facilitate circumvention. This is the reason for keeping manufacturing processes secret and therein also lies the inestimable value of practical experience in a special line.

In an affable and gratefully acknowledged manner the buyer of the new plant described hereunder, which left our shops in the autumn of 1928, placed his valuable experience and observations at our disposal.

Before proceeding with the description, we would mention that a half-stuff mill using rags and two mills, each equipped with two paper - making machines, already existed and the new plant had to be erected in a new building adjoining the main mill.

Our efforts when designing the new plant were directed on avoiding the disadvantages embodied in the four older paper machines, whilst retaining those details which had proved efficient. In this manner the new equipment was designed, which can be considered as perfect as possible on modern knowledge.

Digitized by Google

The new plant was calculated for a daily production of about 12 tons of very fine paper. The complete delivery of our firm comprised two edge runners, each for a capacity of 1100 lbs., ten beater equipments for vats of about 900 gallons content, and a fine paper machine of 90″ trimmed width including the machine- and mixing chests. At a later date the plant was supplemented by a special re-winding machine.

The two edge runners, Fig. 1, are of the latest design and are provided with drives from below and continuous oil lubrication. The bottom stone of basaltic lava has a diameter of 90″, whilst the conical runner stones of 68″ to 72″ diameter are made of granite. Owing to the sensitiveness of the stuff, strong bronze sheet metal was employed for the scrapers, which can be adjusted vertically by means of a rack.

The ten beaters, Fig. 2, each for a capacity of from 440 to 550 lbs., differ somewhat from the

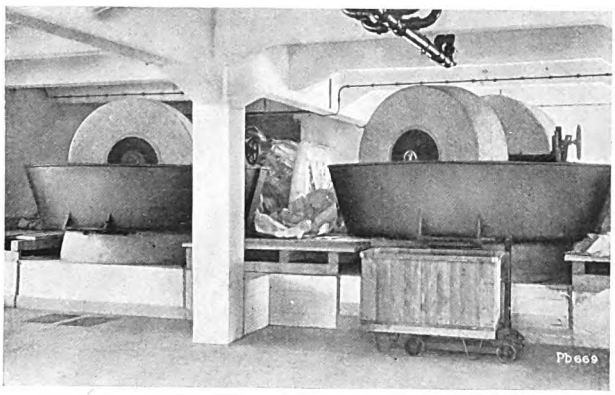

Fig. 1. Edge runners.

normal types and were designed according to the wishes of the buyer.

Firstly, an absolutely rust-proof construction was stipulated and, secondly, the use of very light beater drums of minimum diameter. The bedplates were, therefore, made of Krupp V II A steel, and the beater drums provided with acid-proof phosphorous bronze bars. Contrary to the usual design, the above-mentioned light beater drums require no relieving device. The drum is kept in its proper position relatively to the bedplate by means of a rubber buffer, which also prevents excessive pressure of the drum when the beater is unevenly charged. An indicator device connected with the bearing lever

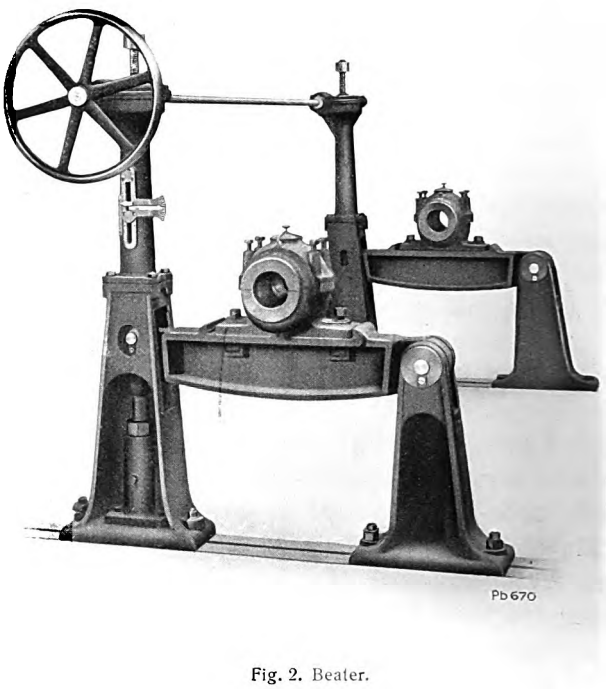

Fig. 2. Beater.

enables the attendant to replace the drum in its original position after each raising. A second pointer in addition indicates the gradual wear of the grinding equipment in fractions of an inch, Fig. 3. The usual leather sealing has proved very efficient also with these beaters. Owing to impermeability of the vat, the contents cannot be soiled by leakage of oil, and the outer appearance of the vat will not be spoiled by the oosing out of stuff. Each beater is driven by means of an electric motor with tightening pulley.

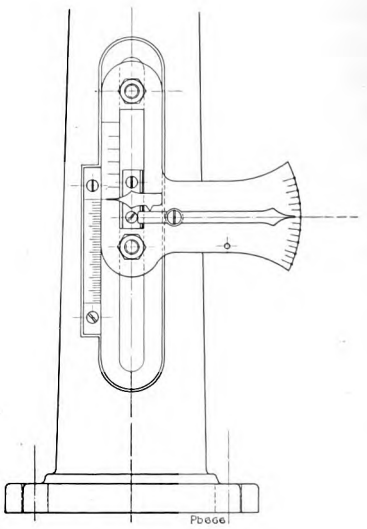

Fig 3. Indicator device for beaters.

Digitized by Google

The circulation of the stuff is very efficient and the performance of the beaters most satisfactory.

After attaining the necessary degree of fineness, the stuff passes through a mixing engine capable of holding the contents of three beaters. A spiral pump

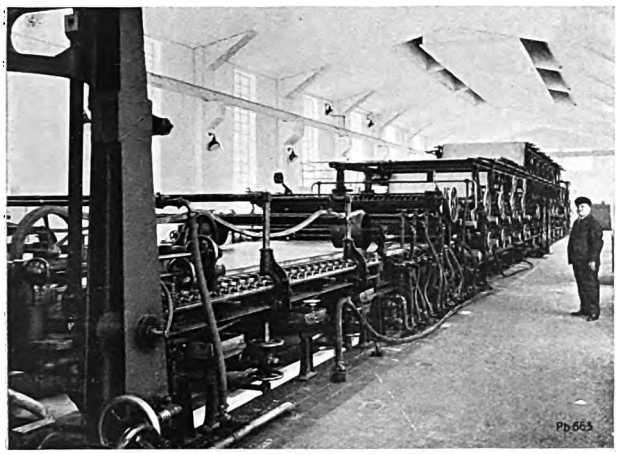

Fig. 4. Wire part.

looks after the circulation of the stuff in order to obtain intense mixing of same, and, according to the opening of a three-way cock, it forces it as required into the two machine chests of 140″ length and 108″ width, which by means of their bronze stirring mechanism keep the stuff in continual motion. The stuff is regulated in the usual manner by means of the bronze bucket wheel with enamelled buckets.

The sand table is made of wood and was constructed by the purchaser to his own designs; the strainer plant was also ordered from a specialist firm.

The paper-making machine is illustrated in the diagram, Fig. 8, and the following details are specially worthy of mention:

As is customary with fine paper machines, the suspended design of the wire part has also been adopted for this machine. The Fourdrinier part with its cast-steel supporting beams is suspended from strong bronze springs, fixed adjustably to the winding gear attached to the supports at the high end. According to the kind of paper being produced, the inclination of the Fourdrinier part may be varied,

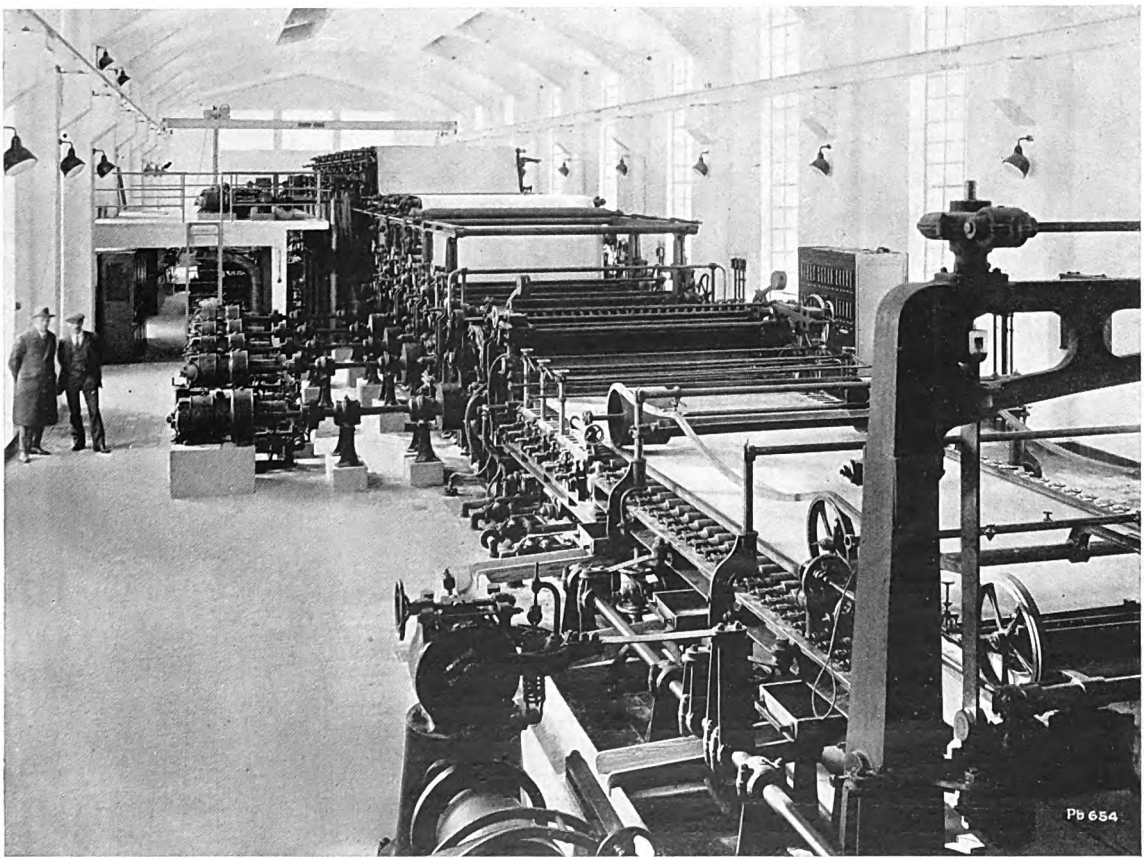

Fig. 5. Drive end with Siemens-Harland individual drive.

Digitized by Google

even with a change of the stuff whilst running. This arrangement allows the Fourdrinier to have an inclination up to 2½", Fig. 4.

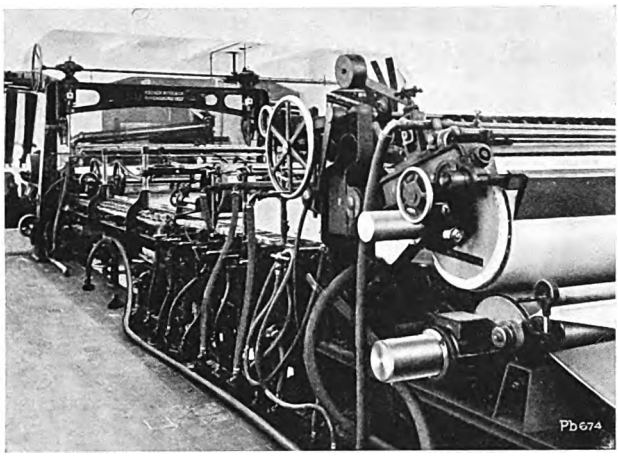

Fig 6. Couch press.

The head roll and all wire guide rolls run in roller bearings, which are efficiently sealed against the penetration of water. To facilitate the insertion and withdrawal of the head roll, when changing the wire, a winch is provided, which is likewise fixed to the end supports.

An extremely powerful shaking device with wide range of stroke adjustment imparts the desired to and fro motion to the wire part. To prevent deflection of the long supporting beams, the shaking device first of all engages a low-lying shaft from which the shaking motion is transmitted to the supporting beam at three different points by means of levers and bronze springs, Fig. 5.

The shaking motion is not only transmitted by the head table, but also by four strong connecting bars to the beam on the attendant's side, which results in an exactly parallel motion of the two supporting beams. Therefore, the tiresome pounding of the table roll bearings and the premature wear of the roll journals is excluded. The head table is lined with bronze sheet.

The customary doctor for the head roll is rigidly fixed to the floor girder and, therefore, does not participate in the shaking motion. It must, however, be readjusted when altering the position of the wire part. Nevertheless, a natural motion of the head roll doctor is obtained by this arrangement through the reciprocating motion of the head roll.

Every paper manufacturer will readily understand why such care was allotted to the design of the deckle device. With high-class papers, a loss of the stuff at the edges of the paper sheet must be avoided under all conditions and for this reason special attention was given to the sealing of the side walls. Provisions had also to be made to obviate rough upset edges. All three slices are, therefore, adjustable both vertically and in the direction of the flow of the stuff whereby in connection with the head table placed underneath a uniform thickness of the web is obtained.

A worm and wormwheel, interconnected by means of a bronze shaft, are fixed in the lateral supports of the deckle device. To facilitate the changing of the wire, a few turns of the handwheel on the connecting shaft suffice to raise the whole deckle with its side walls by 2" to 2½".

The drain water is utilized for diluting, whilst all other waste water, and especially the spray pipe and suction box water is led to the strainer.

The accumulating and discharging channels for the drain water were made of sheet nickeline in order to obtain maximum stability at minimum weight.

The suction box part following the wire part comprises 4 broad flat suction boxes and one suction box of the roller type, which may be withdrawn on to a special support with little trouble when changing the wire.

A three-cylinder suction pump is provided for the five suction boxes. In addition to this, the first two suction boxes can also operate as syphons by simply turning a three-way cock.

To facilitate the use of different dandy rolls, three pairs of standards are provided between the suction boxes, equipped with a very simple but practical appliance, by means of which the dandy roll may be uniformly raised or lowered without damaging the running sheet. Especially with fine water mark papers the dandy rolls have to be withdrawn at frequent intervals from the machine for cleaning purposes and the above-mentioned innovation, therefore, reduces the broke.

The couch press with its rotating brush roll, reciprocating jacket brush, the easily applied doctor

Digitized by Google

on the upper roll has many advantages and is ideal in design, see Fig. 6. An important feature is that when altering the couching angle all these appliances are also automatically adjusted and, therefore, permanently remain in the same position relatively to the upper couch roll.

The press portion for technical purposes was especially adapted to the requirements of fine paper production. Every possibility of stretching the paper longitudinally had to be avoided. Therefore, minimum distances between the presses were adopted and the paper guide rolls between the presses were dispensed with. Since the pessure must also be reduced in order to avoid unnecessary stretching of the paper (about 45 lbs. per 0.5″, width of web) a wet press was provided beyond the reversing press and the work thus distributed over four wet presses instead of the usual three. The dryness of the paper when entering the first drying cylinder fluctuates between 43 to 46 per cent. To obtain long felts in spite of the small distances between the presses, the former are carried down to the lower floor so that their length is 33 feet. All wet felt rolls run in ball bearings in the same manner as the wire guide rolls.

In this connection we would also mention the weighting of the levers of the couch press, the four presses, the smootting press and the calender stock, which are provided with travelling weights, adjustable in any position by means of an eccentric, whereby the pressure on the rolls may be altered to any desired extent, and also independently on either side if necessary, Fig. 7.

Exact control of the tension between the individual presses is possible, by means of the system adopted for guiding the felts and paper sheet, in the following manner:

1. Couch press to first press.

With the usual free lying of the web on the wet felt and corresponding pick up from the wire, the

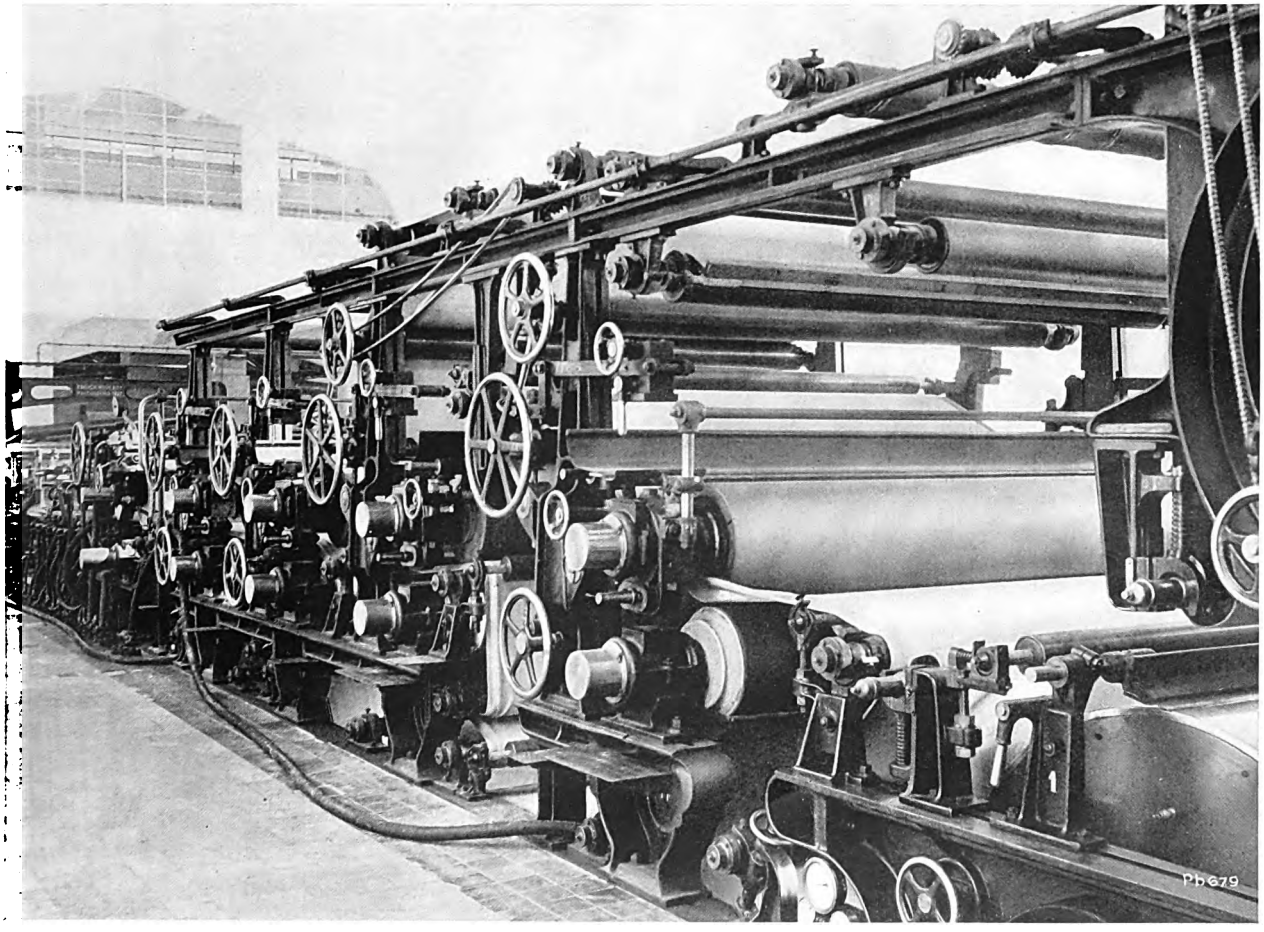

Fig.7. Press portion.

Digitized by Google

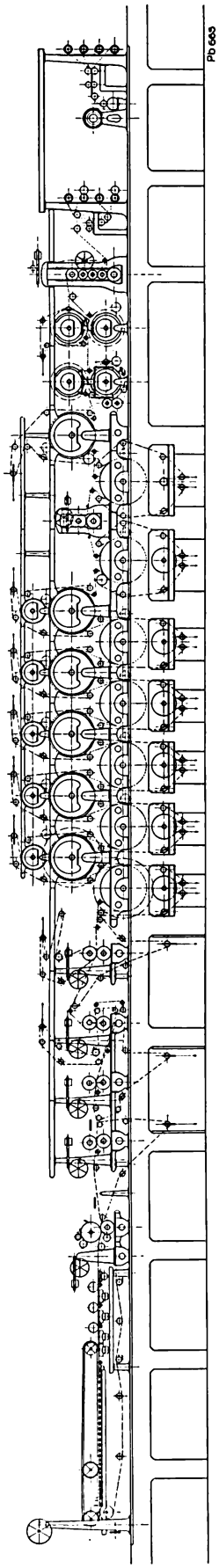

Fig. 8. Diagrammatic sketch of a fine paper machine for a daily production of 12 tons.

attendant at once notices the slackening or pulling of the couch press when the paper leaving the wire rises or falls.

2. From the first press to the second press.

Here the paper is also laid on the felt. If the first press slackens or the second press pulls, the web rises from the first felt, which warns the attendant to regulate the one or the other press.

3. From the second press to the reversing press.

Here the designer was forced to abandon the usual method of guiding the paper, in which the lower paper guide roll is placed so high that a certain sag and consequent stressing of the sheet through stretching results. By the solution adopted to avoid this disadvantage, the smooth running of paper up to the guide roll was obtained by fixing the latter lower. A sensitive spring-balanced bearing permits any alteration in the tension being detected.

4. Reversing press to fourth press.

In this case, stretching through the dead weight of the paper is unavoidable, but must be restricted

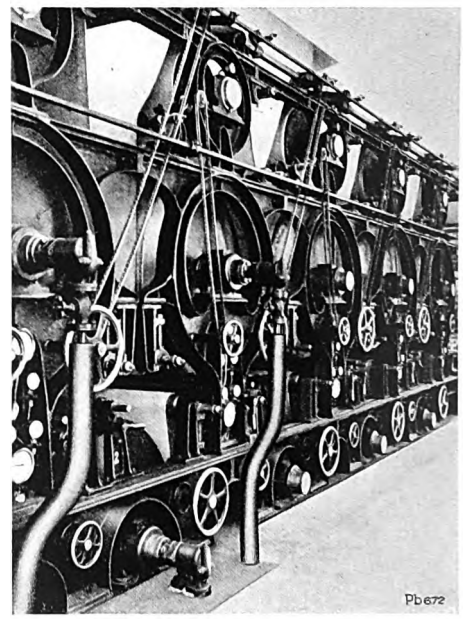

Fig. 9. Drying portion.

to a minimum. The guide roll over which the paper is conducted is exactly balanced by a counterweight. Any change of the tension also alters the position of the guide roll and a glance at the latter will show the machinist what adjustments are necessary.

Digitized by Google

5. From the fourth press to the drying apparatus.

Here also the web is laid on the felt and the paper would detach itself from the fourth wet felt, just as in case No. 2, if the tension is too great. The necessary feed roll is likewise elastically supported.

A number of measurents made proved that the method of guiding the paper just described is correct for the purpose under consideration and that the stretching of the paper in the wet state is considerably less than is usually the case.

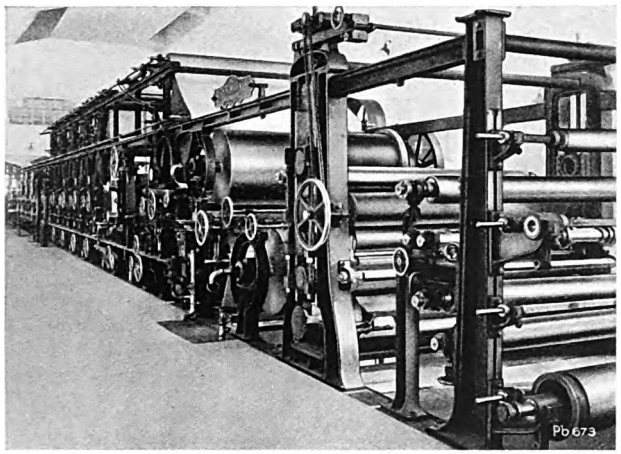

Fig. 10. End of machine.

The two felt suction boxes provided in the first and second wet felt presses, to remove the air from between the felt and the web are designed as so-called tube-type suction boxes and are supported in such a manner that when changing the felt they need only be raised a little but not actually withdrawn from the press. The two suction boxes are connected to a rotary pump of 43 to 53 cubic feet per minute capacity and giving a maximum vacuum of 15″ Hg. to 18″ Hg.

The supporting structure of the lower and upper roll of the couch press and the wet presses is also worthy of mention. In view of the fact that for less sensitive papers a larger displacement of the upper roll relatively to the lower roll and for high-class papers a smaller displacement is desirable, the press standards were so designed that a few hours work on a Sunday suffice to alter the standards carrying the bearing levers of the upper roll, to produce any desired degree of preliminary couching suited to the peculiarity of the paper. This displacement may amount to as much as 5″.

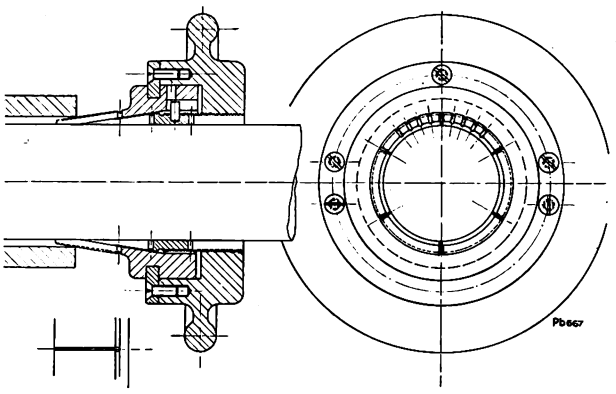

Fig. 12. Adjustable collar for reeling bars.

The design of the drying apparatus is also very characteristic.

In the press part, the elongation of the paper had to be counteracted, whilst during the drying

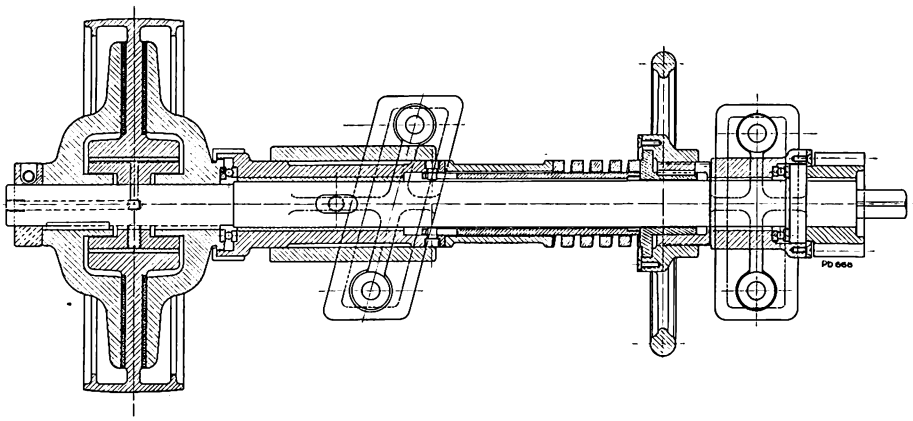

Fig. 11. Friction gear of reeling apparatus.

Digitized by Google

process the shrinkage must not be overlooked. For this reason only the first two drying cylinders have a common drive and the remaining cylinders individual drives. Although the steam fittings provided ensure uniform heating of the cylinder surface, the steam for the first cylinders, was admitted from both sides. With all the other cylinders the steam inlet and condensed water discharge are arranged on the driving end only. To relieve the dry felts as much as possible, each of which serves only one drying cylinder, they are each provided with a felt dryer running in roller bearings, by which means it was possible to have a length of 46 feet for the felts. The felt dryers were not provided for the two final dryers but they can be installed without difficulty at a later date. The 13 paper dryers, not counting the numerous felt dryers, have a total heating surface of 1480 sq. ft., so that with a daily production of 12 tons, an average of about 18.5 lbs. have to be dried per square foot. Bearing in mind that with the quality of paper under consideration one square foot can without trouble deal with 240 lbs. of paper, it is evident that great care has been taken with the drying of the highly-sized fine paper.

Two spring-balanced bearings in each felt automatically compensate any undue stressing and obviate fracture of the guide roll journals.

To facilitate the attendant's control of the stretched felts, each spring-balanced bearing is provided with a pointer and scale and by carefully watching the position of the rolls, the life of the dry felts can be prolonged. The steam controlling apparatus is very appropriately arranged in the supports of the upper cylinders, Fig. 9. Each cylinder is equipped with a steam gauge and each paper dryer with a telethermometer to facilitate the gradual regulation of the drying surface.

The smoothing press, which, if necessary, may be bye-passed by suitably guiding the paper, is installed between the 11 th und 12 th cylinder. The bearings of the two glazing rolls are of the same type as those of the wet presses, which has the advantage of decreasing the number of spare parts.

After leaving the 13 th cylinder, which like the 12 th cylinder is a final dryer, the paper first of all passes over a cooling cylinder (top) with the wire side and then with the upper side over a Schöller humidifier (bottom).

The robust calender follows the smoothing-press. Accepting the fact that machine-glazed papers should require no further treatment, the calender and smoothing-press were equipped with a number of special and important innovations. As the machine has been in service only 7 to 8 months, it would be premature to publish details before all the extensive tests have been terminated, Fig. 10.

A longitudinal cutter with five pairs of knives and a reeling apparatus designed for four reeling bars or two drums form the end of the machine. The Escher Wyss friction gear for the reeling apparatus, illustrated in Fig. 11, embodies many advantages. Thanks to the overhung belt pulleys, the replacement of the felt braking discs requires but a few moments' time.

The last touch to the finished paper is given by the re-winding machine, which as regards its simplicity and manipulation has been the outcome of intensive study.

In the well-known manufacturing process, the paper sheets are slit by the longitudinal cutter, according to requirements, reeled on the rolls of the reeling apparatus, provided with sleeves, and then cut by the cross cutter to the sizes ordered.

As reeling sleeves with round holes are preferred for almost all machines for the further handling of the paper, the reeling apparatus was also equipped with round reeling bars. With the adjustable collar, Fig. 12, designed for this purpose, a slight turning of the handwheel suffices to ensure a firm grip on the round bar and at the same time brevents the reeling sleeve from turning.

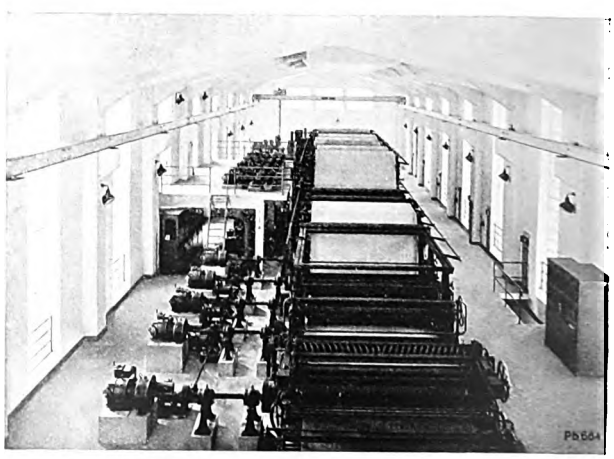

Fig. 13. Total view.

Digitized by Google

To obtain smooth reels of uniform hardness, ready for despatch, the friction gear, Fig. 11, was also employed in this instance. An appliance not described in detail in this article, permits each reel being regulated individually, or all four reels simultaneously, so that all running sheets have the same tension.

It is characteristic of the far-sightedness of the purchaser that in spite of the high initial costs he decided to adopt individual drives for the whole of the machine after carefully examining the pros and cons. The individual drives of the Siemens-Harland system, Fig. 13, were supplied by the Siemens-Schuckert Works in Berlin. The paper speed varies from 16.5 to 265 feet per minute so that a variable speed range of 1 to 16 is required.

Our delivery terminated at the short shafts and all flexible and rigid couplings to which the motors were connected. All shaft bearings are provided with fixed ring lubrication in order to ensure adequate and reliable lubrication even at the lowest speed of the machine. Including the 5 ton travelling crane of 35 feet span we supplied approximately 325 tons of material containing a large quantity of expensive metals far exceeding the normal percentage.

By following the carefully outlined programme of the purchaser and with the close collaboration of our firm, a mill equipment has been created, which may rightly be called as near perfect as our present knowledge can foresee.

Oscillations in the driving mechanism of turbo-locomotives.

(Reprinted from the Stodola Festival Book presented to Professor Dr. A. Stodola on his 70 th birthday by his friends and pupils.)

By H. Nyffenegger.

As with electric locomotives having rod drives, so also with turbo-locomotives having mechanical power transmission critical speeds occur, which are caused by the oscillation of masses. It is shown how taking account of the combined elasticities of the driving axle and the spiders of the driving wheels, the critical speeds of the single-motor Zoelly-Escher Wyss locomotive and the two-motor Zoelly-Krupp locomotive may be determined. Trial trips made with the dynamometer coach of the Swiss Federal Railways confirm the results calculated for the first-mentioned locomotive. By correct proportioning of the parts of the driving mechanism, the critical zones may be altered in such a manner as not to interfere with service conditions.

With the first designs of electric locomotives having crank drives, serious trouble occurred on several occasions, which, only developed within certain zones of the travelling speed. This trouble, which in some cases even resulted in fracture of the driving mechanism, was traceable to mass oscillations in the driving system. The adverse experience gained formed the incentive to investigate the theory of these so-called resonant oscillations, and very soon means were found to successfully combat them. By providing springs in the power transmitting mechanism between the motor and the driving wheels, not only the «critical speeds» are removed to travelling zones which are passed only when starting and stopping, but the oscillation energy is also considerably reduced so that excessive stressing of the driving mechanism cannot occur. The crank drive in practice always has a certain amount of play and, therefore, with two cranks displaced by 90 degrees there will be four changes of the rod motion and consequently also four shocks during each complete revolution, which can set up resonant

Digitized by Google

oscillations in the driving system. Meissner [1]) also found that the driving mechanism elasticity varying during one revolution with the crank angle, as distinct from the ideal parallel crank rod drive which is free from play, and of itself may lead to unstable, i. e. to infinitely increasing natural oscillations.

The driving system of electric locomotives with rod transmission in respect to the effect of the mass oscillations may be constructed in two fundamentally different ways: either only one motor operates all driving wheels or a group of driving wheels, or two motors separately operate the driving wheels or a group of driving wheels. In the first case, the possible oscillating forces are limited by the rail friction and no excessive stressing can occur, as the driving mechanism anyway must be designed for utilising fully the adhesive weight. In the second case, however, the two equal and generally symmetrically arranged rotor masses may oscillate without limit against each other, or against the mass or partial mass of the locomotive lying in the elastic neutral symmetry axis, until a part of the driving mechanism collapses unless counter measures have been adopted.

[1]) Ueber Schüttelerscheinungen in Systemen mit periodisch veränderlicher Elastizität. Schweizerische Bauzeitung. 1918, Vol. II, page 95.

The calculations, which have been made as to the critical speeds of the two Zoelly turbo-locomotives built by Escher Wyss and Krupp, embody some modifications compared with the hitherto known calculations for electric locomotives, so that we will publish them here.

Fig. 1 is a general sketch of the drive of a Zoelly turbo-locomotive, wherein the zig-zag lines represent the elastic members duly considered in the following calculations, based on the metric system. Two rotors (the ahead and reverse turbines), mounted on one common shaft, drive a pinion, which in turn transmits its motion to the intermediate shaft via a double reduction gear and thence by means of parallel crank rods to the driving axles and the coupled axles of the locomotive. This driving system, owing to the bifurcation of the oscillating masses differs considerably from the drives adopted for electric locomotives. To put our investigation on a general basis, it is assumed that additional elastic members are provided in the speed reducing gears. Furthermore we will assume the following:

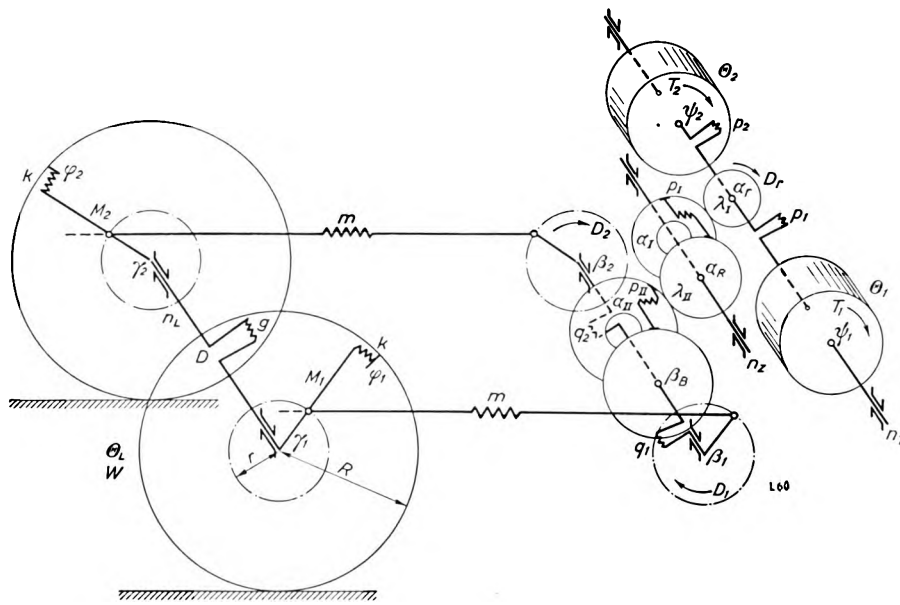

Fig. 1. General sketch of the drive of Zoelly turbo-locomotives.

1. No play in the shaft and driving rod bearings.
2. No gauge and crank displacement errors.

Digitized by Google

3. No division error in the teeth of the reduction gears.

4. The driving gear mass, reduced to the intermediate shaft, as compared with the locomotive and turbine mass may be neglected.

5. That the driving rods be massless and deflection oscillations, therefore, excluded.

With regard to the play in the reduction gear teeth it may be mentioned that under load no separation of the driving tooth flanks occurs, but this may occur when running light, whereby the oscillation frequency is reduced.

If we eliminate from the investigation the power transmission from the driving axle to the coupled axles, the power transmission from one driving side to the other and the resulting effect on the mass of the locomotive connected through rail friction presents a highly interesting problem. In principle the reciprocal power transmission can then only happen through elastic torsion of the driving axle whereby the driving wheels must likewise experience mutual torsion causing periodical gliding on the rails, unless the latter under the influence of the peripheral forces of the wheels suffer elastic longitudinal displacement. To avoid the difficulties of such a lengthy investigation, and yet to arrive at a result satisfying mechanical requirements, the spring capacity of the wheel spiders was inserted in the diagram in addition to the elasticity of the driving axle. This admitted the assumption that the rims of the driving wheels turned together without relative motion and the the movement of the periphery of the driving wheel, corresponds with that of the mass of the locomotive.

In Fig. 1, ψ_1, ψ_2, α_r are the angular positions of the turbine mass and the turbine pinion; α_I α_R, α_{II}, β_B those of the spring-balanced double reduction gear; β_1 and β_2 the angular positions of the intermediate shaft cranks; γ_1 and γ_2 those of the driving axle cranks; φ_1 and φ_2 those of the driving wheel rims, whereby it is assumed that

$$\varphi_2 = \varphi_1 - \frac{\pi}{2}$$

Four our calculations we require the driving gear constants, which, as far as shaft torsion (turbine shaft, intermediate shaft and driving axle) and torsional displacement (springs in the reduction gear) are concerned, are defined as change of angle of the elastic members under the influence of the uniform torgue. The above definition may also be accepted for the angular displacement between the hub and rim of the driving wheels, which may be attributed to a deflection of the spokes. These uniform torsions are designated by p_1 and p_2 for the turbine shaft, by p_I and p_{II} for the springs of the reduction gear, by q_1 and q_2 for the intermediate shaft, by g for the driving axle and by k for the wheel spokes. These values can be determined from the constructional data by the aid of the knowledge of elasticity.

The driving rod constant, designated by m in the diagram, may be determined from the elastic variation of the length Δl of the driving rod l and the angular displacement $\Delta\varphi$ of the cranks set under the angle φ when transmitting the torque D.

$$\Delta l = \frac{l \times D}{F \times E \times r \times \sin\varphi} = r \times \Delta\varphi \times \sin\varphi$$

$$\Delta\varphi = \frac{m \times D}{\sin^2\varphi}\text{ , wherein m is taken } = \frac{l}{F \times E \times r^2}$$

and F designates the cross-section of the rod, r the crank radius and E the elasticity modulus. The speeds of the turbine shaft and of the first and second intermediate shafts are designated by n_T, n_Z, and n_L. For short, we may put:

$$\frac{n_T}{n_Z} = \lambda_I \quad \frac{n_Z}{n_L} = \lambda_{II} \quad \frac{n_T}{n_L} = \lambda_I \times \lambda_{II} = \lambda$$

The radius of the driving wheel is R, by the aid of which we can determine the moment of inertia of the mass $\theta_L = \frac{G}{9.81} \times R^2$ of the locomotive mass $\frac{G}{9.81}$ calculated for rotation, with G as the weight of the locomotive. θ_1 und θ_2 are the moments of inertia of the turbine rotor masses, T_1 and T_2 the positive or negative driving moments of the turbines, W the total useful moment at the periphery of the wheel. D_r, $\lambda_I D_r$, λD , D_1, D_2, M_1 and M_2 are the effective moments at the turbine pinion, in the first and second reduction gear, in the intermediate shaft cranks, in the driving axle and in the wheel spiders.

To begin with, let us assume the rotor θ_2 as non-existent, and we then have the driving diagram of the Zoelly-Escher Wyss locomotive. With the aid of this diagram and the above-mentioned indices we can state the following deformation and motion equations of the system:

(1) $\psi - \alpha_r = D_r \times p_1$

(2) $\alpha_r = \lambda_I \times \alpha_I$

Digitized by Google

(3) $\alpha_I - \alpha_R = p_I \lambda_I \times D_r$

(4) $\alpha_R = \lambda_{II} \times \alpha_{II}$

(5) $\alpha_{II} - \beta_B = p_{II} \lambda_I \times \lambda_{II} \times D_r$

(6) $\beta_B - \beta_1 = D_1 q_1$

(7) $\beta_B - \frac{\pi}{2} - \beta_2 = D_2 \times q_2$

(8) $D_1 + D_2 = \lambda \times D_r$

(9) $\beta_1 - \gamma_1 = \frac{m \times D_1}{\sin^2 \varphi_1}$

(10) $\beta_2 - \gamma_2 = \frac{m \times D_2}{\sin^2 \varphi_2}$

(11) $\gamma_1 - \varphi_1 = k \times M_1$

(12) $\gamma_2 - \varphi_2 = k \times M_2$

(13) $\gamma_1 - \frac{\pi}{2} - \gamma_2 = D \times g$

(14) $\varphi_2 = \varphi_1 - \frac{\pi}{2}$

(15) $D_1 = M_1 + D$

(16) $D_2 = M_2 - D$

(17) $T - D_r = \Theta_T \times \frac{d^2 \varphi'}{dt^2}$

(18) $M_1 + M_2 - W = \Theta_L \times \frac{d^2 \varphi}{dt^2}$

In these equations, apart from the driving gear constants, the moments T and W are known. The other moments and the angular positions of the individual driving gear are unknown. Important for the solution of these equations is the question of the mutual movement between the turbine rotor and the mass of the locomotive, i. e. the temporary variation in the angle difference:

$$\psi - \lambda \times \varphi = \Delta\varphi$$

It is not intended to publish the whole of the calculations involved, but to give an extract thereof. From equations (15) and (16) we deduce:

(I) $$D_1 + D_2 = M_1 + M_2$$

and from equations (8), (17), (18) and (I):

(II) $$\frac{d^2 \Delta\varphi}{dt^2} + \frac{(D_1 + D_2)\ (\Theta_L + \lambda^2 \Theta_1)}{\lambda \times \Theta_1 \times \Theta_L} = \frac{T}{\Theta_1} + \frac{\lambda W}{\Theta_L}$$

in which equation the unknown quantity $(D_1 + D_2)$ has yet to be determined, in order that it completely describes the movement of the masses.

With the aid of the equations (3), (4), (5), equation (I) may be written as follows:

$$\psi - \lambda \beta_B = \frac{1}{\lambda}(D_1 + D_2)(p_1 + \lambda_I^2 \times p_I + \lambda_I^2 \times \lambda_{II}^2 \times p_{II})$$

If for the spring action in the reduction gear we put

$$f = \lambda_I^2 \times p_I + \lambda_I^2 \times \lambda_{II}^2 \times p_{II}$$

then we have

(III) $$\psi - \lambda \beta_B = \frac{1}{\lambda}(D_1 + D_2)(p_1 + f)$$

Bearing in mind that the sum of the deformations, from the intermediate shaft having position β_B up to the wheel rims having the positions φ_1 and φ_2 on both driving sides must be equal, we have:

(IV) $$D_1 \times B_1 + M_1 \times k = D_2 \times B_2 + M_2 \times k = \beta_B - \varphi_1$$

wherein B_1 is used as abbreviation for $\left(q_1 + \frac{m}{\sin^2 \varphi_1}\right)$ and B_2 as abbreviation for $\left(q_2 + \frac{m}{\sin^2 \varphi_2}\right)$. If the right hand side of the locomotive is assumed to be driving, the deformation of the right hand wheel spider is equal to the sum of the deformations of the driving axle and of the left hand wheel spider, and from this results:

(V) $$D \times g = M_1 \times k - M_2 \times k = \gamma_1 - \frac{\pi}{2} - \gamma_2$$

If from equation (16) we determine D and from equation (I) M_1 and insert these values in equation (V), we have:

(VI) $$M_2 = r \cdot D_1 + s \times D_2$$

(VII) $$M_1 = (1 - r) D_1 + (1 - s) D_2$$

with $$r = \frac{k}{2k + g} \quad \text{and} \quad s = \frac{g + k}{2k + g}$$

If we introduce equations (VI) and (VII) into equation (IV), then

(VIII) $$D_1 = \frac{u}{w} D_2$$

wherein

$$w = (B_1 - 2k \times r + k) \text{ und } u = (B_2 + 2k \times s - k)$$

Calculating β_B from equation (IV) and inserting equation (VIII), we have:

(IX) $$\beta_B = D_2 \times z + \varphi_1$$

wherein $$z = B_2 + k \times s + k \times r \times \frac{u}{w}$$

Inserting $\frac{p_1 + f}{\lambda} = v$ in equation (III), we have:

$$D_2 = \frac{\Delta\varphi}{n} \quad \text{and} \quad D_1 = \frac{u}{w} \frac{\Delta\varphi}{n}$$

$$\text{with } n = \lambda \times z + v\left(1 + \frac{u}{w}\right)$$

Finally:

(X) $$(D_1 + D_2) = \Delta\varphi \frac{(u + w)}{w \times n} = \Delta\varphi \cdot H\varphi$$

and we secure the differential equation of motion sought for:

(XI) $$\frac{d^2 \Delta\varphi}{dt^2} + \Delta\varphi \times \frac{H\varphi \times (\Theta_L + \lambda^2 \Theta_1)}{\lambda \times \Theta_L \times \Theta_1} = \frac{T}{\Theta_1} + \frac{\lambda W}{\Theta_L}$$

$H\varphi$ may be determined by inserting the abbreviations used, and after lengthy transformations, we ultimately arrive at:

(XII) $$\frac{H\varphi}{\lambda} = \frac{1}{e\varphi} = \frac{A \sin^2(2\varphi_1) + B}{C \sin^2(2\varphi_1) + E(q_1 \sin^2 \varphi_1 + q_2 \times \cos^2 \varphi_2) + F}$$

wherein the coefficients are determined as follows:

Digitized by Google

$$(XIII)\quad \begin{cases} A = 2kg + (2k+g)(q_1+q_2) \\ B = 4m(2k+g) \\ C = \lambda^2(2k+g)q_1 \times q_2 + (q_1+q_2)[\lambda^2 k(g+k) \\ \quad + (p_1+f)(2k+g)] + kg[\lambda^2 k + 2(p_1+f)] \\ E = 4m\lambda^2(2k+g) \\ F = 4m[\lambda^2 k(g+k) + (2k+g)(p_1+f+m\lambda^2)] \\ \quad \text{with } f = \lambda_I^2 \times p_I + \lambda_I^2 \times \lambda_{II}^2 \times p_{II} \end{cases}$$

The value $e\varphi$ represents the total elasticity of the driving mechanism dependent on the position of the cranks and varying constantly with the time t. Although the periodic elasticity is due to the rod drive, yet the value of the fluctuation is independent of the rod elasticity m as may be inferred from equations (XII) and (XIII). The following special cases may be derived from the above-mentioned equations:

Assuming p_1 and $f = 0$, we have a similar case as already dealt with for electric locomotives with rod drive.[2])

Assuming $q_1 = 0$, we obtain the unsymmetrical drive of the Zoelly-Escher Wyss locomotive, with which the large toothed wheel of the second reduction gear lies outside of the right hand longitudinal frame and serves as crank disc. With symmetrical drives ($q_1 = q_2$), the total elasticity during one revolution of the driving wheel passes through four complete periods, with unsymmetrical drives through only two periods.

Meissner has shown how in the case of two equal interval partial constant elasticities e_1 and e_2 „oscillating zones" may be calculated, which are determined by a function

$$J(\tau) = \text{cosine}(\pi\tau\eta)\,\text{cosine}(\pi\tau\zeta) - \frac{1}{2}\left(\frac{\eta}{\zeta} + \frac{\zeta}{\eta}\right) \times \text{sine}(\pi\tau\eta)\,\text{sine}(\pi\tau\zeta)$$

wherein τ designates the variable rotation time of the gear η and ζ the natural oscillation indices of the system corresponding to the constant elasticities e_1 and e_2. One will, therefore, in a given case substitute the continuously variable elasticity $e\varphi$ by two partial constant mean values. In the case under consideration we then have the following equation for the natural oscillation of the coupled masses:

$$\eta = \frac{1}{2\pi}\sqrt{\frac{1}{e_1} \times \frac{(\Theta_L + \lambda^2\Theta_1)}{\Theta_L \times \Theta_1}} \qquad \zeta = \frac{1}{2\pi}\sqrt{\frac{1}{e_2} \times \frac{(\Theta_L + \lambda^2\Theta_1)}{\Theta_L \times \Theta_1}}$$

$J(\tau)$, according to the greater or lesser deviation of the ratio $\frac{\eta}{\zeta}$ from the value 1, will represent a more or less distorted wavy line. Those zones of τ in which $J(\tau)$ surpasses the values ± 1, are zones of resonant oscillation. In general there are an unlimited number of such zones. The intersecting values τ_1 and τ_1', τ_2 and τ_2' etc. are the limit values of the zones of the critical rotation periods, and the values $v_1 = \frac{1}{\tau_1}$ and $v_1' = \frac{1}{\tau_1'}$ etc., the corresponding rotation frequencies of the driving wheels and also the critical travelling speeds of the locomotive is given by $V_K = 3{\cdot}6 \times 2\pi\ R \times v$ kilometres per hour.

Since with symmetrical drives the pulsating frequency is four times the frequency of rotation, with unsymmetrical drives the twofold, $\frac{v}{4}$ and $\frac{v}{2}$ are also critical rotation frequencies. The rod drive with play also leads to $\frac{v}{4}$.

As results from Fig. 2 of the Meissner investigation, it is permissible up to ratio values of $\frac{\eta}{\zeta} = 0.6$ to simply determine the natural oscillation coefficient by aid of the constant mean elasticity e_m instead of calculating with $J(\tau)$. The critical travelling speeds thus calculated then either occur in the exactly calculated zones or quite near their limits.

It now remains to investigate the drive of the Zoelly - Krupp locomotive corresponding to the complete diagram, Fig. 1. Let us for the moment simplify the system in such a manner, that a constant elasticity is adopted in place of the variable total elasticity $e\varphi$. The locomotive mass may be taken as infinitely large as compared with the turbine masses and we then arrive at the diagram illustrated in Fig. 2.

The deformation and motion equations are:

$$(1a)\qquad \psi_1 - \lambda\varphi = D_1 \times p_1$$

$$(2a)\qquad \psi_2 - \lambda\varphi = D_2 \times p_2$$

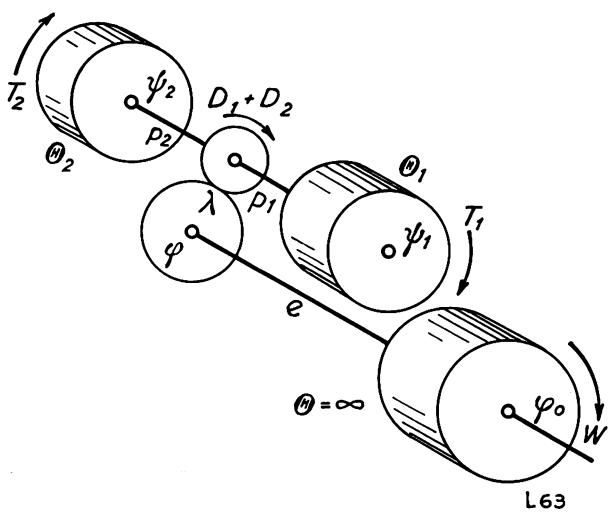

Fig. 2. Simplified drive diagram.

[2]) E. Müller. Ueber die Schüttelschwingungen des Kuppelstangenantriebes. Schweizerische Bauzeitung. 1919, Vol. II, page 141.

Digitized by Google

(3a) $\varphi - \varphi_0 = \lambda (D_1 + D_2) e$

(4a) $T_1 - D_1 = \Theta_1 \times \frac{d^2 \Delta \psi_1}{dt^2}$

(5a) $T_2 - D_1 = \Theta_2 \times \frac{d^2 \Delta \psi_2}{dt^2}$

We are interested in the temporary variation of the angle differences $\psi_1 - \lambda = \Delta \varphi_1$ and $\psi_2 - \lambda \times \varphi_0 = \Delta \varphi_2$.

From (1a), (2a) and (3a) results:

(I a) $\Delta \varphi_1 = D_1 (p_1 + \lambda^2 \times e) + D_2 \times \lambda^2 \times e$

(II a) $\Delta \varphi_2 = D_2 (p_2 + \lambda^2 e) + D_1 \lambda^2 \times e$

and by differentation, insertion and transformation we finally arrive at the differential equation of the natural oscillation of the masses:

$$\text{(III a)}\quad \Theta_1 \times \Theta_2 \left(p_1 + p_2 + \frac{p_1 \times p_2}{\lambda^2 \times e}\right) \frac{d^4 \Delta \varphi}{dt^4} + \left[\left(1 + \frac{p_1}{\lambda^2 \times e}\right) \Theta_1 + \left(1 + \frac{p_2}{\lambda^2 \times e}\right) \Theta_2\right] \frac{d^2 \Delta \varphi}{dt^2} + \frac{\Delta \varphi}{\lambda^2 \times e} = 0$$

This equation obviously embraces not only the oscillations of one of the turbine masses as compared with the infinitely large mass of the locomotive, but also the mutual oscillations of the turbine masses. For the general driving diagram of the Zoelly-Krupp locomotive e is no longer a constant, but as in the case of only one turbine mass already dealt with, is a value dependent on the position of the cranks. The driving gear elasticity $e^* \varphi$ to be adopted in the case under consideration may be at once determined from equation (XII) for we have only to assume $p_1 = 0$. The value thus derived must now be inserted in equation (IIIa) in place of $\lambda_2 \times e$ in order to obtain the general law of the motion in the Zoelly-Krupp drive. Since with symmetrical drives, and especially if additional spring devices are provided in the reduction gears, the pulsation of the total elasticity is not very large, a mean value e^*_m may be inserted in place of $e^* \varphi$. With the aid of the characteristic equation of the fourth order:

$$ax^4 + bx^2 + c = 0,$$

wherein a, b and c signify the coefficients of $\frac{d^4 \Delta \varphi}{dt^4}$, $\frac{d^2 \Delta \varphi}{dt^2}$ and $\Delta \varphi$ the imaginary roots $x_1 = K_1 \times i$ and $x_2 = K_2 \times i$ may be calculated, from which the corresponding oscillation indices

$$\nu_1 = \frac{K_1}{2\pi} \quad \text{and} \quad \nu_2 = \frac{K_2}{2\pi}$$

and the critical travelling speeds V_1 and V_2 of the locomotive are at once obtained. For the same reasons as in the first case, $\frac{V}{2}$ and $\frac{V}{4}$ will also be critical speeds.

In Fig. 3 the reciprocal values $\frac{1}{e \varphi}$ of the total driving gear elasticities resulting from the driving gear dimensions of the two Zoelly-turbo-locomotives built by Messrs. Escher Wyss and Krupp are illustrated.

The most important data for the calculation are compiled in the following table:

		Escher Wyss	Krupp
G	kg	69000	112400
R	m	0.76	0.825
r	m	0.325	0.3125
l	m	2.67	0.297
m	$m^{-1}\ kg^{-1}$	18.45 10^{-8}	26 10^{-8}
k	$m^{-1}\ kg^{-1}$	8.0 10^{-8}	8.7 10^{-8}
g	$m^{-1}\ kg^{-1}$	140 10^{-8}	72.0 10^{-8}
q	$m^{-1}\ kg^{-1}$	0 10^{-8}	15 5 10^{-8}
q	$m^{-1}\ kg^{-1}$	72.0 10^{-8}	15.5 10^{-8}
p	$m^{-1}\ kg^{-1}$	1169.0 10^{-8}	850.0 10^{-8}
p	$m^{-1}\ kg^{-1}$	0 10^{-8}	1000.0 10^{-8}
Θ_1	$m^{+1}\ kg\ s^2$	2.05	1.935
Θ_2	$m^{+1}\ kg\ s^2$	0	0.954
Θ_L	$m^{+1}\ kg\ s^2$	4500 (incl. allowance)	∞ assumed
λ		28.7	24.3
$l : e_1$	mkg	2036	—
$l : e_2$	mkg	3884	—
$l : e_m$	mkg	2960	3948

After an exact calculation with the aid of the function $J(\frac{}{\tau})$ we arrive at the following series of

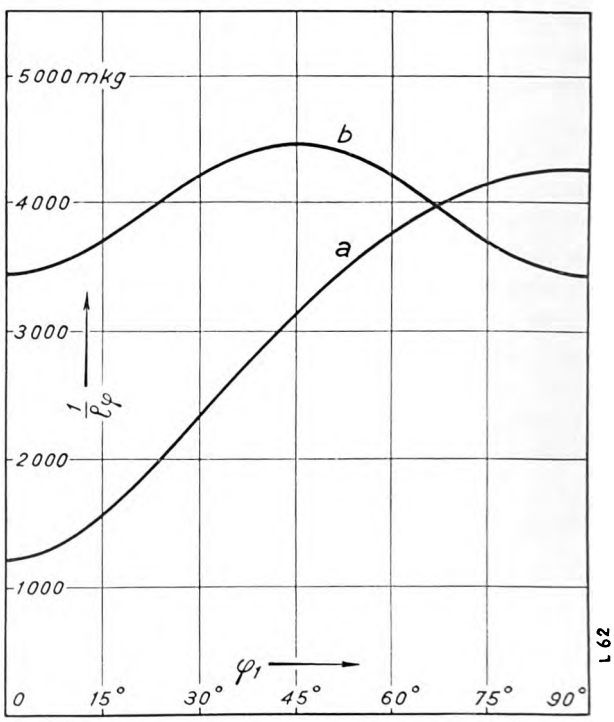

Fig. 3. Variable driving gear elasticity.

a) Zoelly-Escher Wyss locomotive b) Zoelly-Krupp locomotive

Digitized by Google

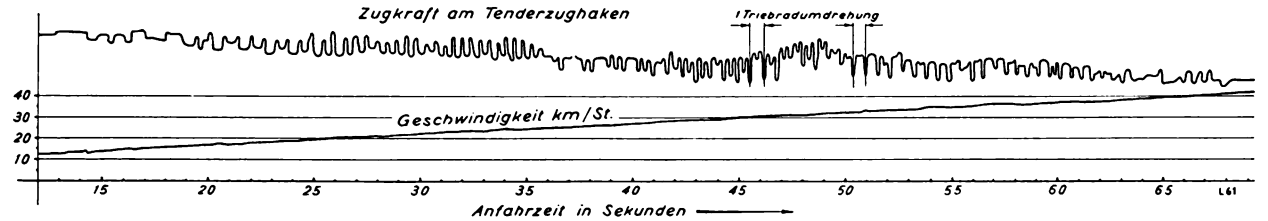

Fig. 4. Starting diagram of the Zoelly—Escher Wyss locomotive.

Zugkraft am Tenderzughaken = drawbar pull; Triebradumdrehung = one revolution of driving wheel; Geschwindigkeit km/st = speed in km/hr; Anfahrzeit in Sekunden = starting time in secs.

zones of natural frequencies for the Escher Wyss locomotive:

ν = 14.29 to 13.17 7.3 to 6.99 4.74 to 4.565 3.59 to 3.435 per sec.

and therewith also at the critical travelling speed zones lying within the speed range of the locomotive (V_{max} = 75 km/hr).

V_K = 14.8 to 15.4 19.6 to 20.75 29.5 to 31.8 39.3 to 40.7 56.75 to 62.7 (227 to 245.8) km/hr.

Of these zones, however, only the first, second, third and eventually the fifth will be noticeable, as only these correspond to the interference frequency ensuing with existing play of the rod.

The simplified calculation with the aid of the mean elasticity gives us the following results:

V_K = 15.2 30.4 60.8 (121.7) km/hr.

coincident with the above values.

A large number of trial runs were made with the locomotive. Compared with the reciprocating locomotive, the incomparably better running properties of the turbo-locomotive are conspicuous. There are no reciprocating masses and, therefore, complete mass compensation is possible. During the period of acceleration a slight and rapid vibration is noticeable, which is most-pronounced at a speed of approximately 30 kilometres an hour. However, with one exception, when after a run of a few minutes at 30 km/hr. (see speed record) the locomotive vibrated increasingly and it was found advisable to stop her, no trouble was experienced. It must be mentioned that also the critical bending of the turbine rotor coincides with this speed; however, the assumption that the trouble emanated from torsional oscillations is borne out by the fact that the right hand driving rod bearing, which had shortly before been examined, was found to be hot on stopping. The starting diagrams, recorded in August 1924 with the dynamometer coach of the Swiss Federal Railways one of which is reproduced in Fig. 4, clearly show the presence of the calculated critical zones. Although the recording device of the coach indicating the tractive force was not very suitable for recording vibrations following in rapid succession, yet such were recorded, albeit with only half or one fourth of the actual frequency, which was probably due to existing asymmetry. Beyond a speed of 40 km/hr. the tractive force diagrams evince no further vibrations. Under normal conditions, the critical zones are quickly passed when accelerating or decelerating the locomotive and, therefore, do not give rise to trouble.

For the Zoelly-Krupp locomotive, the theoretical investigation disclosed the two natural oscillation frequencies of 46.5 and 5.18 per second. Of these, however, only the smaller frequency can give rise to critical travelling speeds within the speed range of the locomotive (V_{max} = 100 km/hr). These speeds are:

V 27.15 54.3 (108.6) km/hr.

Although casual observations justify the assumption that the calculated critical speeds actually exist, a definite proof is as yet not forthcoming. The fact that the locomotive within the normal speed range of from 60 to 100 km/hr. runs without a hitch, might be accepted as a proof of the calculated critical travelling speeds.

If with new designs of turbo-locomotives we wish to avoid risk, it will be necessary to investigate the drive in respect to the critical speeds when the definite design has been settled, in order to adopt effective counter measures.

Digitized by Google

The "Autofrigor" refrigerating plant in the "Grand Hotel du Lac", Lucerne.

By Ed. Wintsch.

Whilst mechanical refrigerating plants have gained a firm footing in butchers and other branches of the food stuff industry, one still finds the antiquated ice-cooled safes and ice-cooled rooms in hotels, inns and boarding houses. Apart from the unhygienic and laborious attendance of such ice-cooled plants, they all have the disadvantage of having a relatively high humidity of the cooling room air, which detracts from the quality and fresh appearance of the stored food stuffs.

The continual development of the tourist traffic and the ever-increasing needs of the guests both with regard to personal comfort in apartments and with the quality of the menu finally prompted proprietors to devote greater attention to the preservation of food stuffs and to the cooling of beverages. This trend has become particularly noticeable since the hotels overcame the economic crisis following the great war when their equipment was modernised on a large scale, and in many instances up-to-date refrigerating plant was installed.

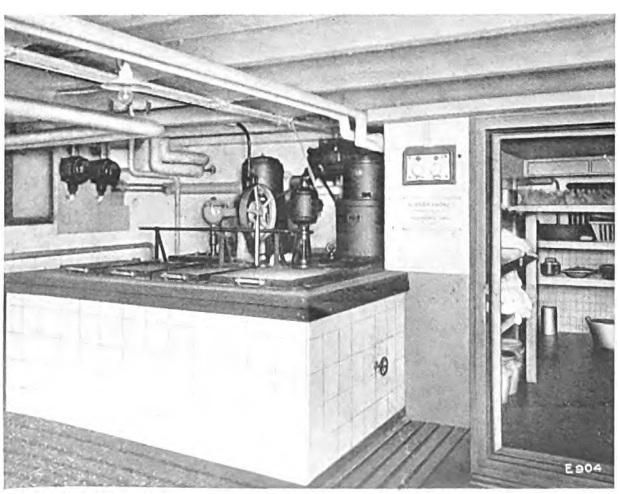

Fig. 1. Machine room.

Among the many progressive hotels, which have improved their service in this manner, may be mentioned the « Grand Hotel Du Lac » at Lucerne. On the occasion of extensive renovations being effected to the hotel, an elaborate refrigerating plant was provided, which we will now proceed to describe.

When deciding upon the type of refrigerator to be adopted, special stress was laid on simple and reliable operation in view of the change of personnel with the various seasons. A further point was the question of minimum running and maintenance expenses, small space requirements and permanent serviceability. In face of these conditions, the choice fell to the automatic « Autofrigor » refrigerator manufactured by Messrs. Escher Wyss & Co. and the order for the complete refrigerating plant was given to Messrs. Autofrigor A.-G. in Zurich, whose proposals were judged as the most favourable.

In view of the scattered positions of the cooling rooms and compartments, and the possibility of producing ice and ice creams including the conservation of the latter, it was decided to instal the « Autofrigor » type 3 for brine cooling. Originally the following rooms were to be cooled:

an antechamber of 530 cub. ft. content for food remnants, cold dishes, etc., 43° to 46° Fahr.

a cooling room of 335 cub. ft. content for fresh meat, poultry, etc., 36° to 39° Fahr.

a cooling room of 1165 cub. ft. content for mineral waters, lemonade, etc., 43° to 46° Fahr.

a beer storage room of 865 cub. ft. content, 43° to 46° Fahr.

a beer broaching (tapping) room of 690 cub. ft. content, 43° to 46° Fahr.

In addition, and with a corresponding extension of the service hours, the daily production of 10 gall.

Digitized by Google

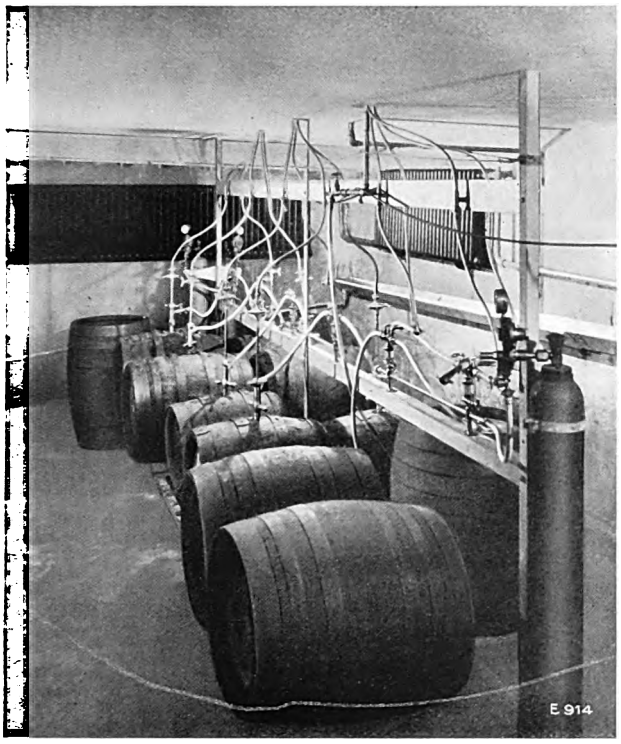

Fig. 2. Broaching cellar.

of ice cream and 220 lbs. of ice had to be taken into account. Due to the later union of the «Hotel Du Lac» with the adjoining restaurant «Flora» and its beer garden, and the creation of a large restaurant hall, the refrigerating plant was enlarged by:

a beer storage and tapping cellar of 1165 cub. ft. content, Fig. 2;
two cooled bars of 18 and 20 feet length, and
two liqueur safes.

The calculation of the thermal units required for the efficient cooling of the enlarged plant resulted in the provision of two « Autofrigor » refrigerators, each for a capacity of 12.000 B. T. U. per hour. The provision of two machines was determined by the local conditions and the fact that in times of small refrigerating output (in winter, for instance, the garden buffet, one of the liqueur safes and the large beer storage and broaching cellar are not in use) only one machine is operated, whereby the low running expenses are still further reduced.

For this reason, the two machines are contained in separate brine tanks, which are, however, interconnected in such a manner that they may be operated either singly or together. By means of appropriate pipelines the brine tank containing 6 ice cream conservators of 2 gallons content each, and a large freezing compartment are directly connected with the source of cooling. The ice cream drum of 4½ gallons content is placed in the brine tank of one of the machines, whilst the 6 ice cubicles of 15 lbs. content each may be placed in the brine tank of the other machine. This latter tank also contains the special pump coupled directly to an electric motor, which circulates the cooled brine. All brine vessels are united under a common cover to form one unit and are situated in the cellar directly underneath the office from which they are readily accessible.

Adjoining the machine room, Fig. 1, we find the food cooling plant, which, as already mentioned above, is subdivided into an antechamber and a meat cooling room. These rooms are specially intended for the storage of foodstuffs, etc., whilst a sufficiently large cooling safe located in the office looks after the daily needs. This latter contains separate compartments for cold dishes, fish, milk, butter und beverages.

The cooling rooms for mineral waters and beer are completely isolated from the food cooling plant and have separate doors. The beer broaching rooms, Fig. 2, contain all necessary apparatus and fittings arranged in a clear manner and easily accessible so that the cleaning and manipulation is facilitated. The rooms are of sufficient size to be able to keep 8 barrels tapped for the dining hall and 12 barrels for the garden restaurant, and to store in addition two truck loads of beer barrels.

The cooled bar in the dining hall, Fig. 3, and likewise the bar in the garden restaurant are reserved for open and bottled wines, and mineral waters.

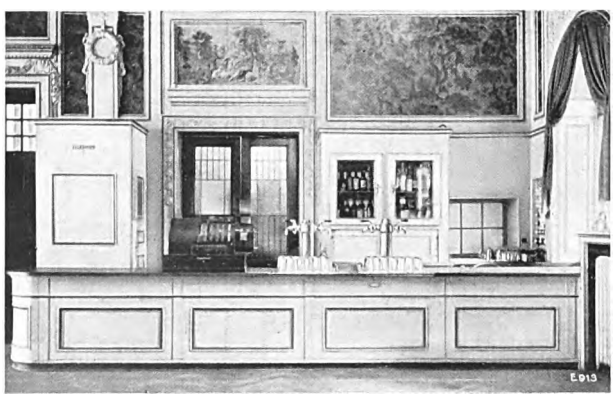

Fig. 3. Bar in dining hall.

Digitized by Google

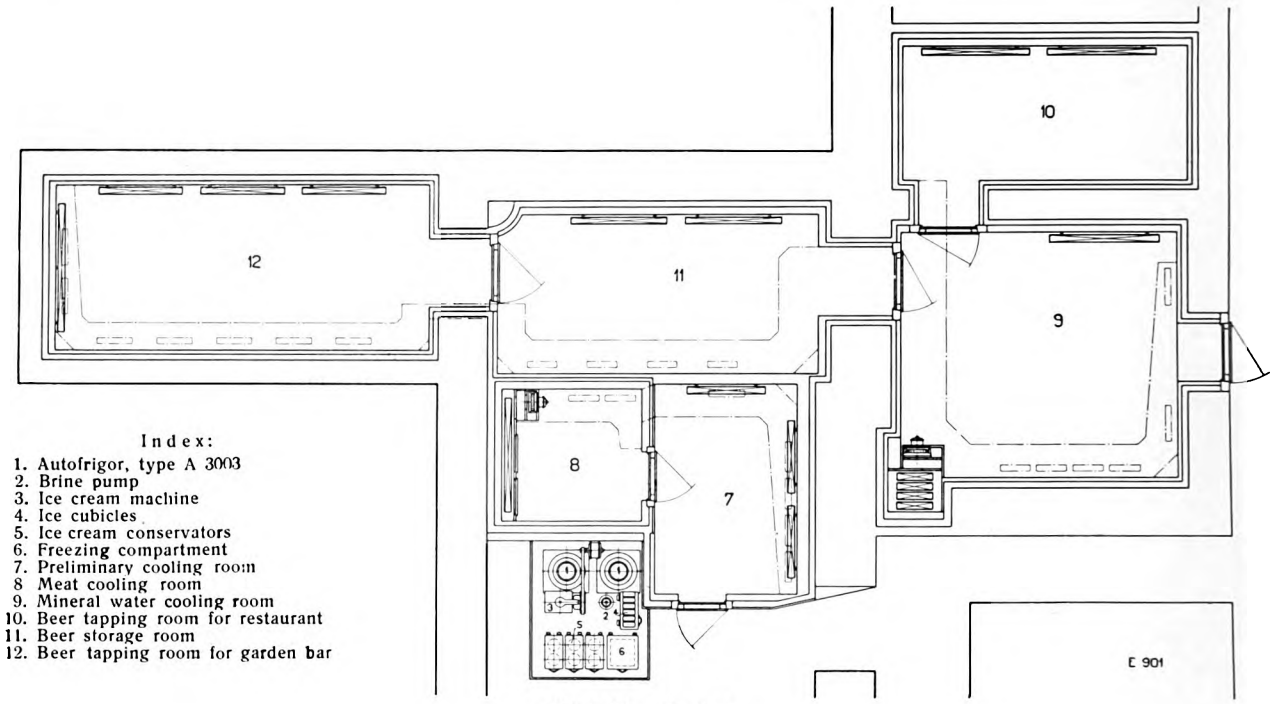

Fig. 4. Plan of cellar.

Corresponding to the necessary different temperatures, the various kinds of wine are kept in separate compartments, and the respective cooling systems may be operated individually.

This also applies to the two liqueur safes, which are situated directly behind the bars and can be easily served.

From the machine room in the cellar, the cooled

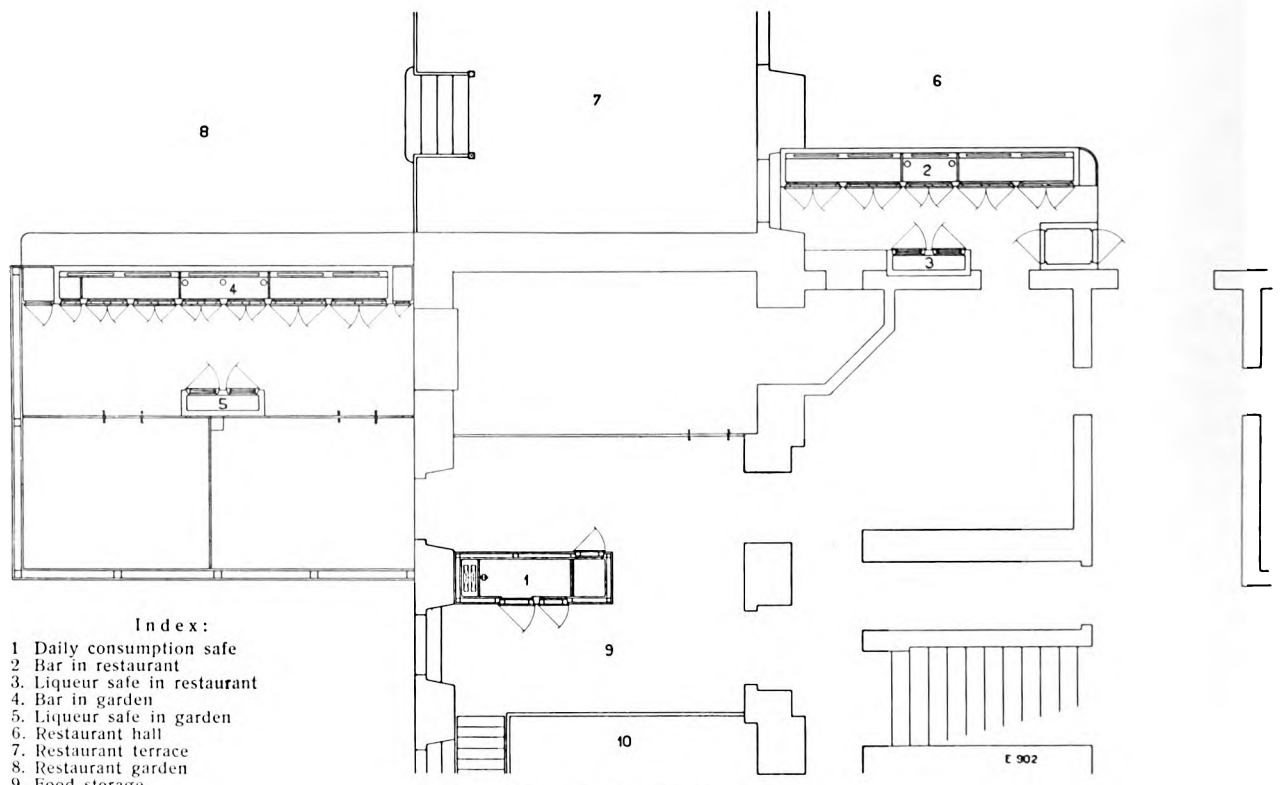

Fig. 5. Plan of ground floor.

Digitized by Google

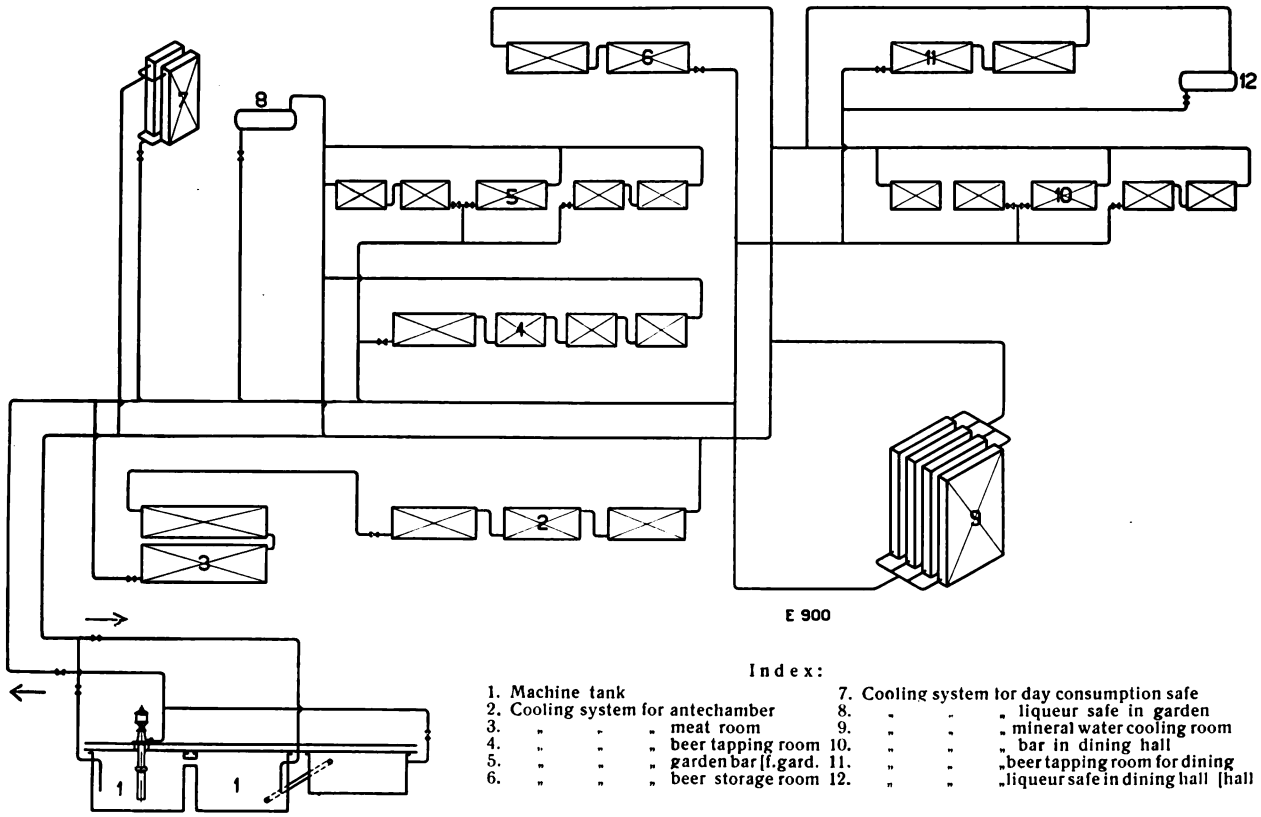
E 900
Index:
1. Machine tank
2. Cooling system for antechamber
3. „ „ „ meat room
4. „ „ „ beer tapping room
5. „ „ „ garden bar [f.gard.
6. „ „ „ beer storage room
7. Cooling system for day consumption safe
8. „ „ „ liqueur safe in garden
9. „ „ „ mineral water cooling room
10. „ „ „ bar in dining hall
11. „ „ „beer tapping room for dining [hall
12. „ „ „liqueur safe in dining hall

Fig. 6. Diagram of the brine pipelines.

brine contained in the brine tanks is forced to the cooling systems by the brine pump mentioned above. The systems consist of cast-iron radiators for the cooling rooms, and of galvanized sheet-iron vessels for the safes and bars. Fans of adequate capacity are provided in the food cooling room and mineral water room for circulating and renewing the air. Channels fixed to the ceilings conduct the cooled air thence and also to the beer cooling and storage rooms. Part of the brine piping is laid invisibly in the walls.

The main regulating point for the entire refrigerating plant is in the centre of the cellar directly near the machine unit. In addition, all refrigerating elements forming a system are provided with separate valves so that individual rooms may be switched off without interfering with the main plant.

The plan of the cellar, Fig. 4, illustrates the general lay-out of the machine room and the distribution of the various cooling rooms, whilst the ground floor plan, Fig. 5, indicates the position of the bars, liqueur safes und safe for daily consumption. Fig. 6 is a diagram of the brine pipelines.

The first part of the plant has been in service since July 1927, whilst the extension was placed in operation in May 1928. In conclusion it may be said that the lay-out of the complete refrigerating plant has proved most satisfactory and that its excellent functioning is a further proof of the sound design and adaptability of the «Autofrigor» refrigerators manufactured by Messrs. Escher Wyss & Co. in Zurich.

Digitized by Google

The new carcase and offal utilization plant of the City of Cologne.

By W. Steinmann.

After 20 years' service, the existing apparatus for carcase utilization at the City of Cologne had completely worn out and required replacing. Initially the choice of the new plant caused some difficulty as all competitors claimed that with their particular apparatus the material could be sterilized and treated in an ideal manner. Therefore, the choice was determined by the plant which would prove most economical in service.

It was known that a private company in Holland, the «Niederländische Thermochemische Fabriken», owned an equipment manufactured by Messrs. Escher Wyss & Co. and that this company was in a position to organize the collection of raw material at their own expense, to refund two-thirds of the price of the skins and yet to obtain satisfactory financial results, whilst such plants in Germany require considerable subsidies. A committee of the Maschinenbauamt of the City of Cologne was delegated to visit this plant and confirmed the excellent operating results. The irreproachable functioning of the apparatus was also duly acknowledged.

A characteristic feature of the Escher Wyss system is that the glutinous fluid is not separated from the raw material, but after being rid of its grease content, it is thoroughly dried together with the raw material. The work is performed according to the split process, with which about 5 tons of raw material are dried and turned into meal in 6 hours in one drying apparatus. The yield of meal when treating slaughter house offal amounts to from 19 to 20 per cent, when treating whole carcases to from 27 to 29 per cent. According to the statements of the works engineer about 4500 tons of material are handled in this plant annually, of which amount approximately 60 per cent is slaughter house offal and 40 per cent carcase material. The average yield from this material amounts to 23 per cent meal and 10 per cent fat. The area providing the raw material covers 2350 square miles.

The quality of the products was amazingly good and the prices they fetched very high. The meal from this plant is sold at 1½ d. per lb. and the fat at 3 d. to 4 d. per lb. The fat recovered from pigs, horses, cattle and offal is stored separately.

However, the decision as to the placing of the order for the new apparatus was delayed as a committee of town councillors on the occasion of a visit to Munich also visited the carcase utilization plant of that city, whose apparatus had been supplied by another firm. The faulty functioning of that plant and the nuisance created by odours in the whole neighbourhood induced the committee not to instal the new apparatus adjacent to the existing plant, but to erect a completely new plant far outside of the town. Contrary to this decision, the Maschinenbauamt of Cologne was of opinion that it was not necessary to remove the plant as the odour nuisance was non-existent with Escher Wyss type of apparatus. Thereupon the committee of town councillors including the vice-mayor Bergmann travelled to Holland, where a careful study of the plant supplied by Messrs. Escher Wyss & Co. completely wiped out the unfavourable impression gained in Munich. It was ascertained that the carcase utilization plant lies right in the centre of a township and that no odour nuisance was detectable in the neighbourhood. A convincing proof of this was the fact that new buildings were springing up very close to the plant and pretty private houses had been erected in its immediate vicinity. After establishing these facts, it was unanimously decided not to remove the existing plant in Cologne and to place the order for the new apparatus with Messrs. Escher Wyss & Co. The capacity of the new apparatus will be about 12 tons of raw material in 8 hours.

The modernized Cologne plant offers many points of interest for the knackery trade as it is the first plant of its kind in Germany to be equipped with apparatus of Messrs. Escher Wyss & Co.'s system, hitherto known only in foreign countries.

Publishers: Escher Wyss & Co., Zurich (Switzerland).
Printed by: Siegfried & Co., Zurich (Switzerland).
London Office: Escher Wyss & Co., 20 Grosvenor Gardens, Westminster, London S. W. 1.
Tokyo Office: Escher Wyss & Co., Marunouchi Building, Room 322, Tokyo.

Digitized by Google

Ja 8'31

ESCHER WYSS NEWS

Volume II

5

Sept.-Oct. 1929

Published by Escher Wyss & Co. S. A.

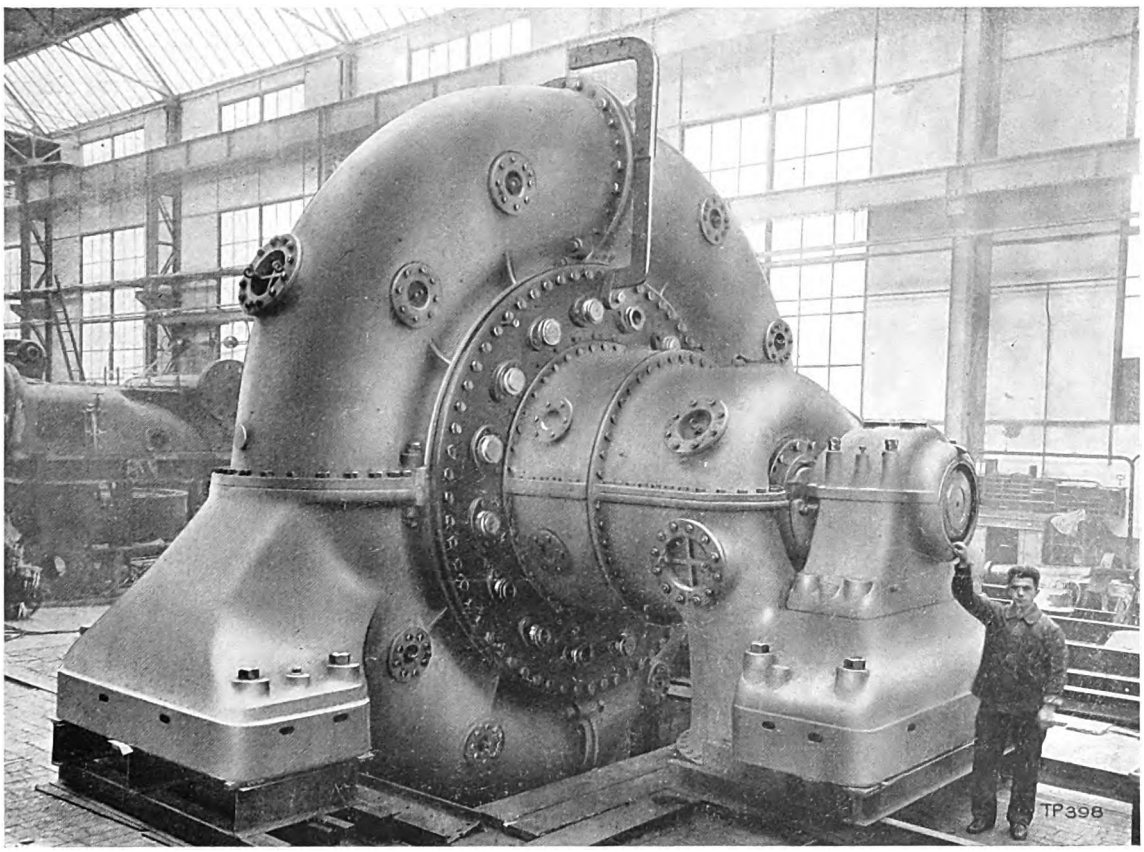

27000 HP Storage pump for the power storage station Niederwartha of the Energieversorgung Gross-Dresden.

Contents

		Page
1.	The electrically-welded pressure pipeline of the Terni-Galleto power station	159
2.	The Shannon power station in Ireland	167
3.	Plant for salt works	175
4.	Apparatus for treating fish offal	187
5.	The crowning of couch press and wet press rolls	190

AGENTS FOR UNITED STATES
THE NATIONAL POWER MACHINERY CORP.
2912 CHANIN BLDG., NEW YORK

Digitized by Google

ESCHER WYSS STORAGE PUMPS

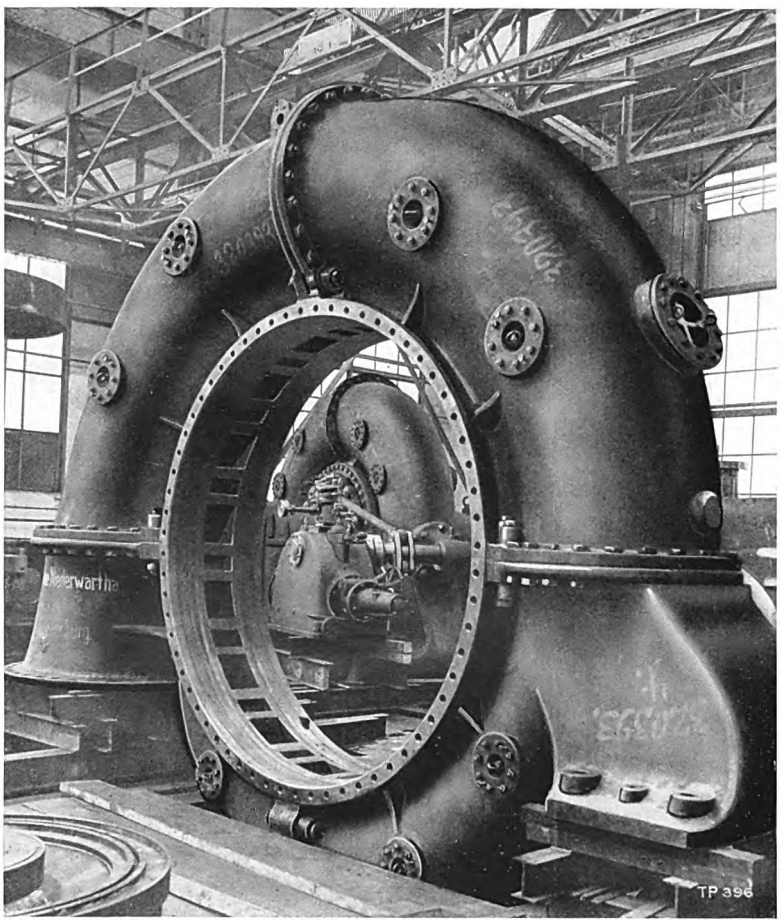

The introduction of the adjustable guide apparatus for storage pumps is our undeniable merit. Adjustable guide apparatus for storage pumps have hitherto been exclusively supplied by our firm.

Casing of one of the 27 000 HP pumps for the power storage station Niederwartha of the "Energieversorgung Gross-Dresden".

In the background is visible one of the 30 000 HP Francis turbines for the Niederwartha power station.

ESCHER WYSS
HAVE PUT INTO SERVICE THE LARGEST STORAGE PUMPS HITHERTO BUILT

Plant	Machine output	No. of pumps	Total output	In service since
Fridingen	620 HP	3	1860 HP	1924
Schwarzenbach	10000 HP	2	10000 HP	1925
Tremorgio	13600 HP	2	13600 HP	1926
Reutlingen	1500 HP	1	1500 HP	1926
Reutlingen	800 HP	1	800 HP	1926
Zweribach	1050 HP	1	1050 HP	1926
Hemfurth (Eder Valley Carrage)	8350 HP	2	16700 HP	1928
Mittweida	718 HP	1	718 HP	1928
Mittweida	368 HP	1	368 HP	1928
Leitzach	8000 HP	2	16000 HP	1929
Niederwartha	27000 HP	2	54000 HP	in course of construction
Schwarzenbach	18850 HP	1	18850 HP	" "
Bringhausen	30000 HP	4	120000 HP	" "
Armisa	1050 HP	1	1050 HP	" "
Schluchsee	26700 HP	2	53400 HP	" "
Merkenbach	1620 HP	1	1620 HP	" "

Digitized by Google

ESCHER WYSS NEWS

PUBLISHED BY MESSRS. ESCHER WYSS & Co. S. A.

VOLUME 2 | No. 5 | SEPT-OCT. 1929

The "Escher Wyss News" will be published periodically in bi-monthly issues. Reprinting of articles or illustrations appearing therein will only be permitted when source thereof is duly acknowledged. Single numbers 1/6; one year's subscription 7/6.

The electrically-welded pressure pipeline of the Terni-Galleto power station.

By A. Sonderegger.

In Umbria, in the new province of Terni near Rome, within the last few years the large water power station of Galleto has been constructed on

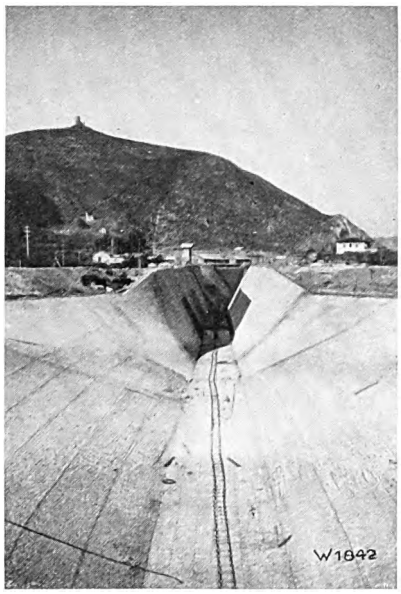

Fig. 1. View of the open canal leading the water to the tunnel.

the banks of the river Velino. The detailed description of this highly interesting plant will be reserved for the water turbine designer. Before proceeding with the description of the electrically-welded pressure pipeline, which constitutes the largest exclusively welded object in existence, we will give some general information explaining the fundamental conditions relating thereto.

The Velino in the limestone mountains north east of Rome has a catchment area of about 930 sq. mi., in a mountainous region, the stone of which is exceedingly permeable and is capable of absorbing large quantities of water. In consequence thereof a large number of springs exist, whose water volume is very constant, giving the Velino an exceptionally favourable and constant flow of water. After its junction with the river Nera, the Velino descends over the mountain side 660 ft. high into the valley, thereby forming the celebrated Marmore Falls in the neigbourhood of Rome, widely known for their beauty.

The considerable water power thereby created

Fig. 2. Inlet of water from open canal to the ferro-concrete tunnel of 24 ft. diameter.

AGENTS FOR UNITED STATES
THE NATIONAL POWER MACHINERY CORP.
CHANIN BLDG., NEW YORK

Digitized by Google

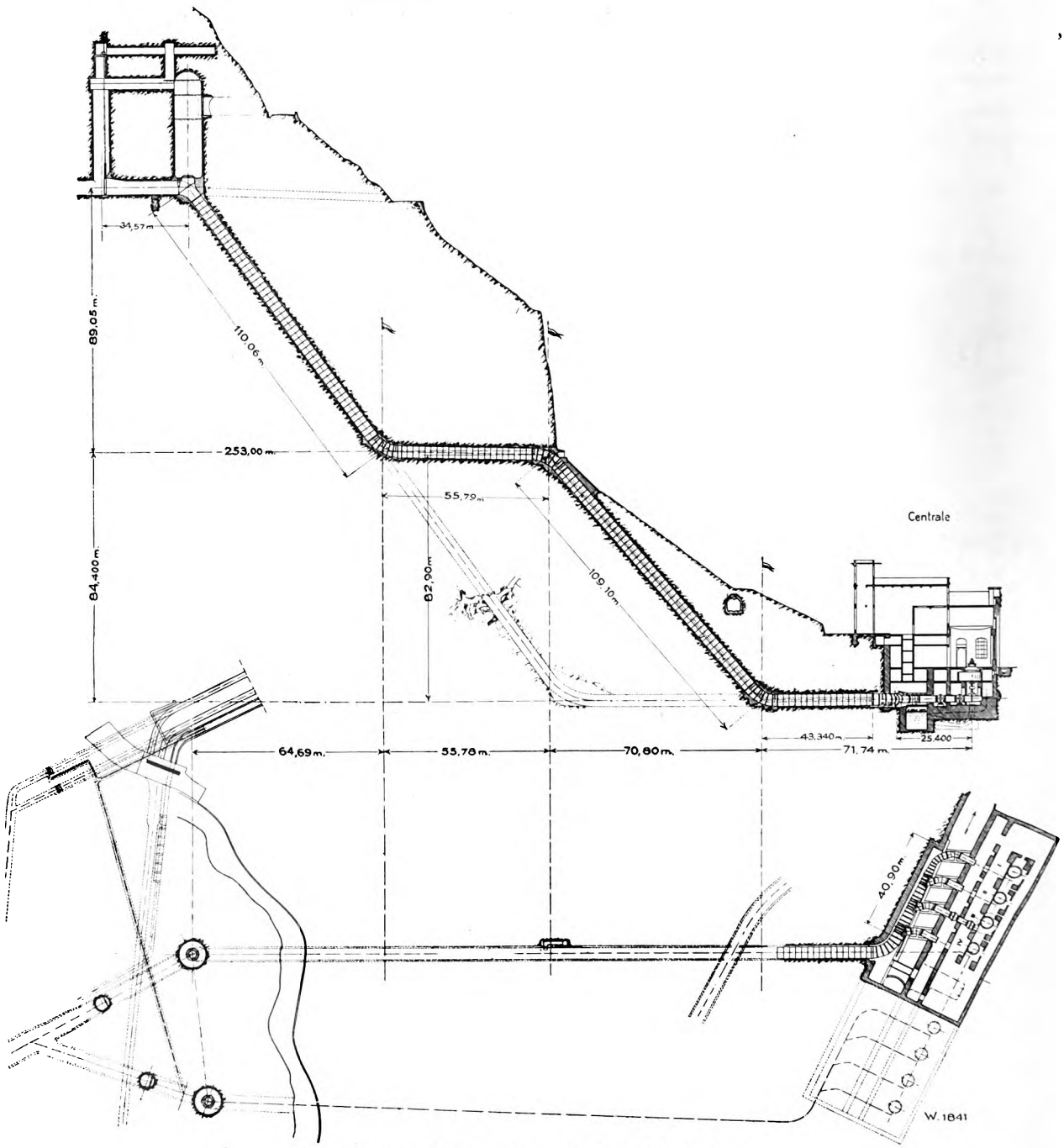

Fig. 3. Sectional elevation and plan of the finished pipeline 1.

being situated in exceedingly favourable conditions had been exploited during the last three decades by a number of small power stations so that ultimately seven such plants belonging to different parishes and industrial undertakings working side by side were producing 100 000 kW. All these stations operated with antiquated and inappropriate equipments, insufficient water supply, open water channels without pressure pipelines, etc. Six years ago similar conditions prevailed on the river Nera, where no less than 16 water power stations and concessions side by side existed in the Nera catchment area.

A Combine of these various owners under the patronage of the Società Terni undertook the task of terminating these conditions and to paving the way to an economic utilization of the water power of the Nera area by uniting the various interests in

Digitized by Google

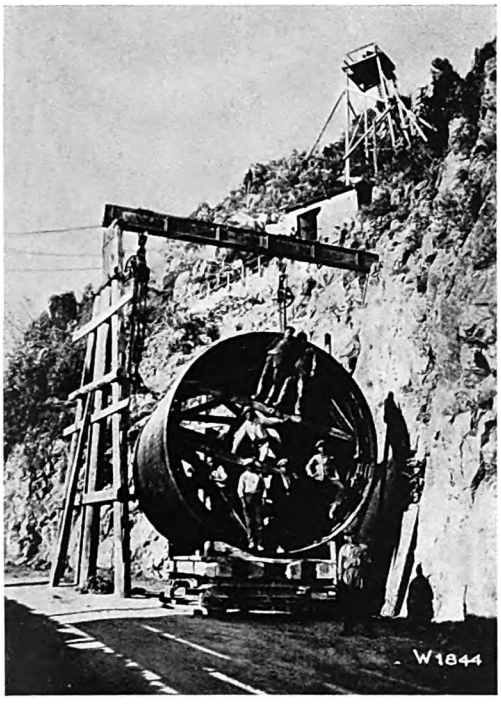

Fig. 4. Unloading the pipeline sections on the road at the top of the pipeline.

a single company and at the same time elaborating a far-reaching modern scheme to attain this end. The Galleto power station forms a part of this scheme. *)

The water required for the Galleto plant amounting to 6355 cub. ft. is derived from the river Velino, upstream from the Marmore Falls and downstream from a short channel connecting the river with Lake Piediluco. This lake with a surface of 1 819 000 sq. ft. forms a very efficient compensating reservoir. From the water inlet, the water is first of all led through an open channel 2310 ft. long and about 56 ft. deep and then through a concrete tunnel about 2410 ft. long and 24 ft. diameter to the surge chamber, Figs. 1 and 2. This latter is of an imposing size. One of the two vertical shafts contains a quick closing safety sluice, which may be operated from the power station. Another sluice may be actuated from the upper gallery of the surge chamber. The pressure compensating shaft has a diameter of 30 ft. and a height of 115 ft. From thence two pressure tunnels of 13 ft. diameter lead down to the power station. One of these tunnels, equipped with the iron pressure pipeline, is already in service, whilst the other has been driven through the rock and will be completed at a later date. Both pressure tunnels descend to the valley of the Nera at an angle of 50 to 66 degrees. The head is approximately 630 ft.

Fig. 3 illustrates the sectional elevation and plan of the finished pipeline. The broken form was determined by the structure of the rock, which vetoed a straight pipeline. To avoid a large hollow in the rock, which was partially filled with loose and shifting masses, the horizontal portion of the pipeline was led into the open and thence re-entered the mountain at a bend. The lower end of the pipeline enters the cellar floor of the Galleto station at a further bend and is connected with the distributing pipes for the four turbines. The pipeline has a diameter 13 ft. and the distributing pipes a diameter of 5 ft. The distance between the branches is 33 ft., so that the complete distributing pipeline including the inlet bend is approximately 165 ft. long.

The thickness of the sheet metal used for the pipeline varies from 0.4″ to 1.25″ inch according to the prevailing pressure and the strength of the rock. The upper part of the pipeline above the horizontal section is made of mild steel sheet of from 0.4″ to 0.64″ thickness. The horizontal part and the lower inclined pipeline consist of nickel steel sheet of 38

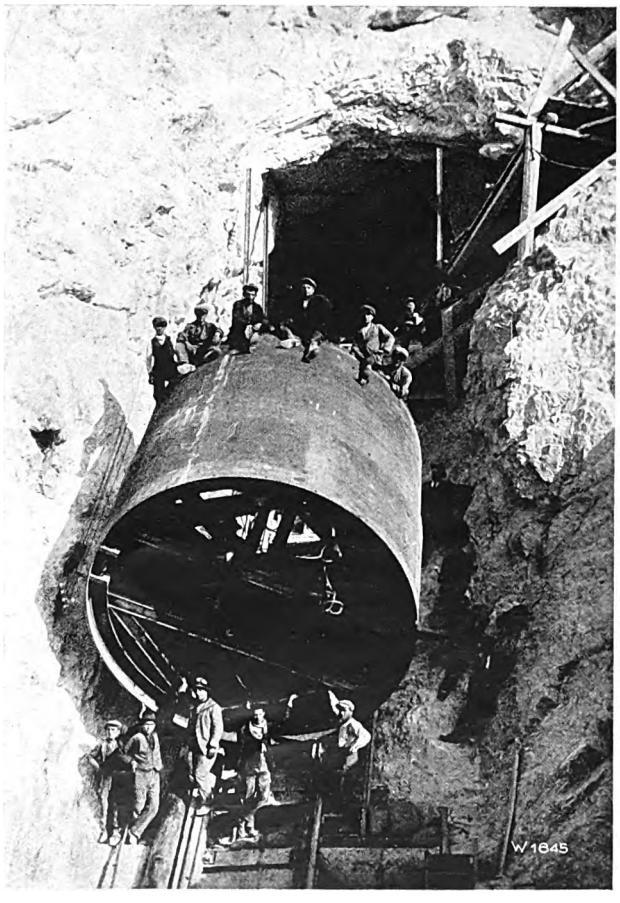

Fig. 5. Transport of a pipeline section on the open stretch below the bend. The provisional reinforcing rings for the transport and concreting in of the section are plainly visible.

*) Società Terni. „L'utilizzazione dei fiumi Nera e Velino etc. Milan, Arti Grafiche E. Calamandrei & Co.

Digitized by Google

Fig. 6. Lowering a pipeline section through the tunnel.

to 45 tons per sq. in. strength and 0.75″ to 1.25″ thickness. The branches of the breeches piece are made of cast-steel.

The pipeline was executed in sheet-metal sections of 6.5 feet length, whereby two sections were united in the workshops to form one pipe of 13 feet length and in this condition it was transported to site. The round seams are lap-welded and the longitudinal seams butt-welded and reinforced with double straps. During the assembly, the individual pipe sections were unloaded on the road above the precipice, Fig. 4, lowered through the tunnel, Figs. 5 and 6, and progressively welded together. The bends were provisionally assembled in the workshops, Fig. 7, and then transported to site in partial segments and finally welded together. Whilst the pipeline was being assembled, the space between it and the rock was filled up with concrete, the pipeline being secured against deformation by means of reinforcing cross pieces. The assembly was effected smoothly and without any accident in spite of the large dimensions of the pipeline.

The distributing pipeline was provisionally assembled in the shops of the Acciaierie di Terni, Fig. 8, then dismantled for transport and finally assembled and welded in the machine house of the power station. The individual pieces weighing up to 60 tons were then lowered into the cellar, Fig. 9, transported to the final position and welded together with the main pipeline. The manufacture and mounting of the large shrunk rings of 12″ by 8″ cross-section, by means of which the cast-steel branch pieces were connected to the cylindrical pipeline, was especially interesting. For technical reasons, the largest of these rings, 13 ft. diameter, were forged in two parts, which were joined by an electrically-welded dovetailed joint. After fixing the hot rings, the complete section of the distributing pipeline was finish welded, Figs. 10 to 12. Further details of the distributing pipeline are shown in Figs. 13, 14 and 15. The complete manufacturing process was performed without a hitch to schedule. Regarding the experience gained with the electrical welding of such large sections, we refer the reader to "Escher Wyss News" No. 3, 1928.

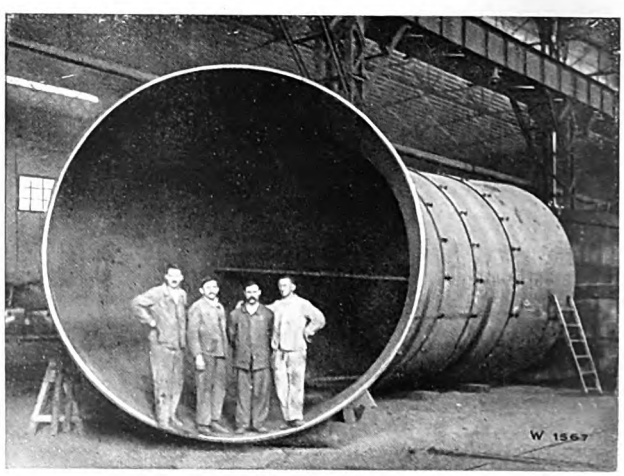

Fig. 7. Bend provisionally assembled in the workshops.

Digitized by Google

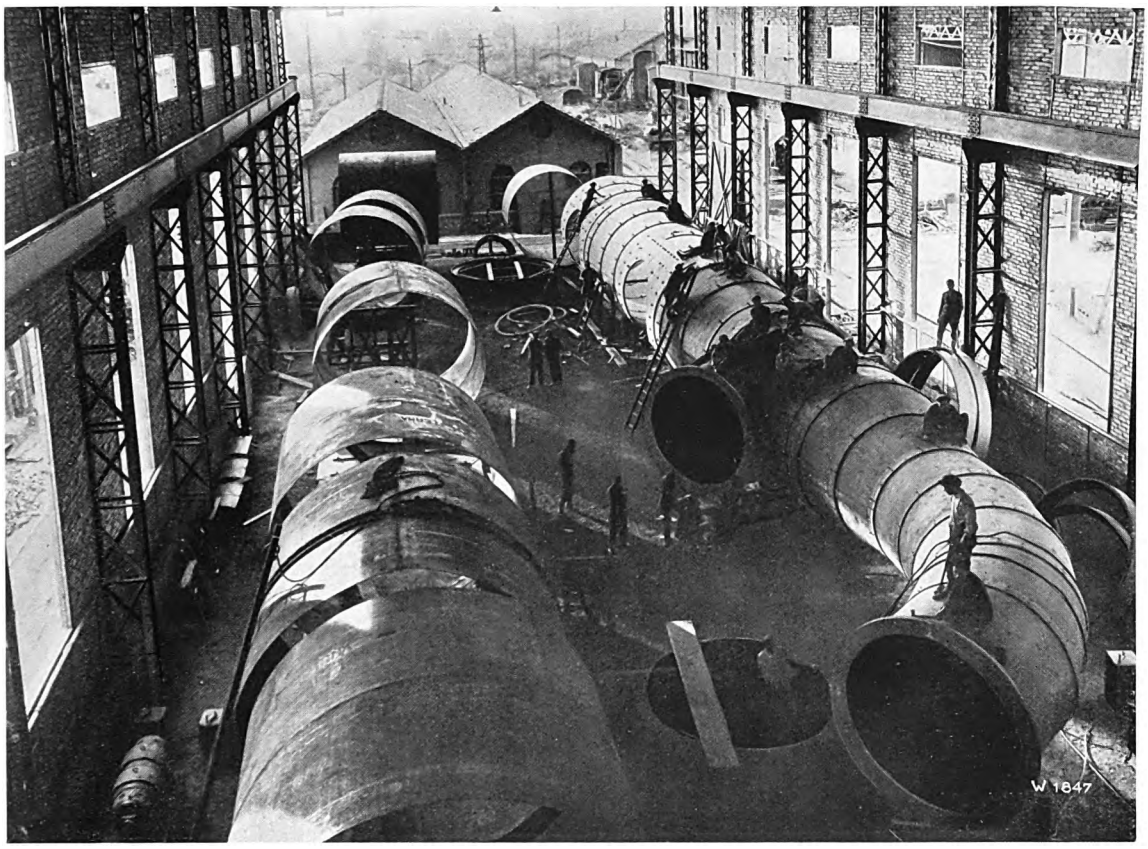

Fig. 8. Provisionally assembled distributing pipeline in the shops of the Acciaierie di Terni.

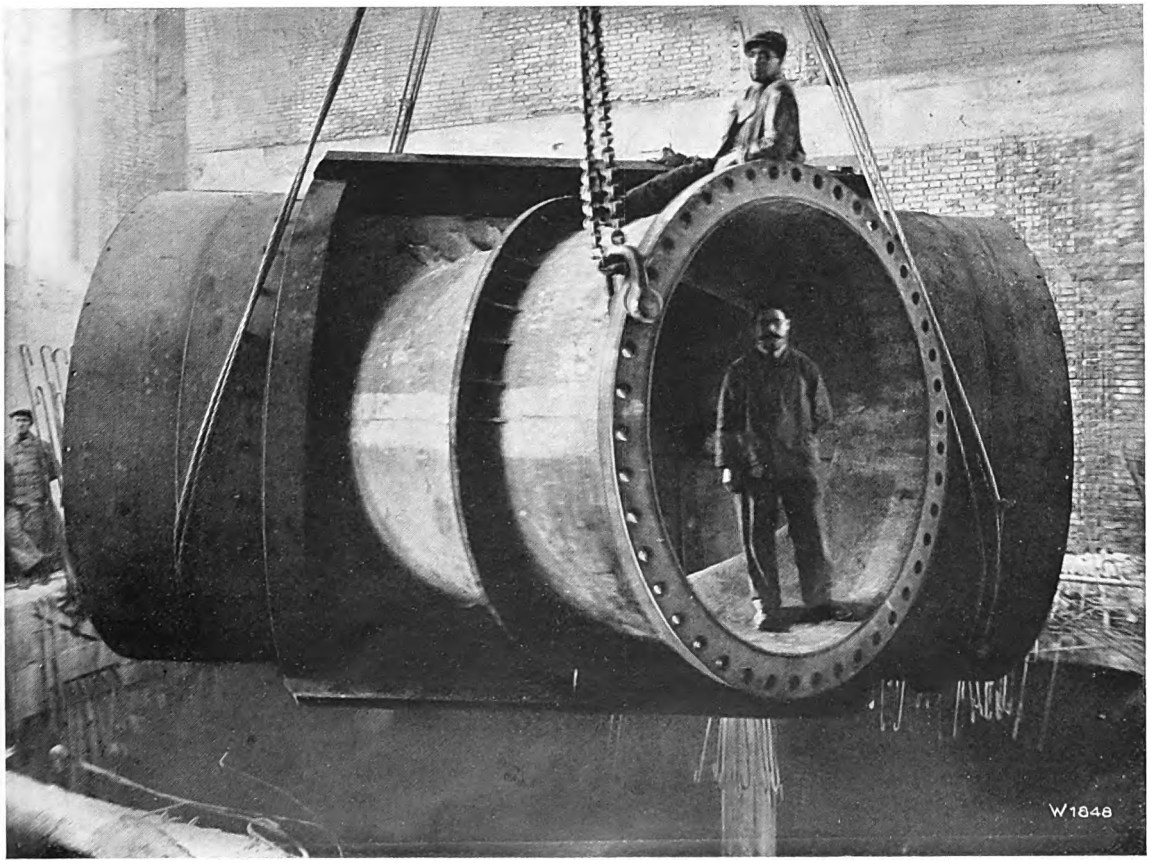

Fig. 9. Lowering a completely welded section of the distributing pipeline from the machine house into the cellar.

Digitized by Google

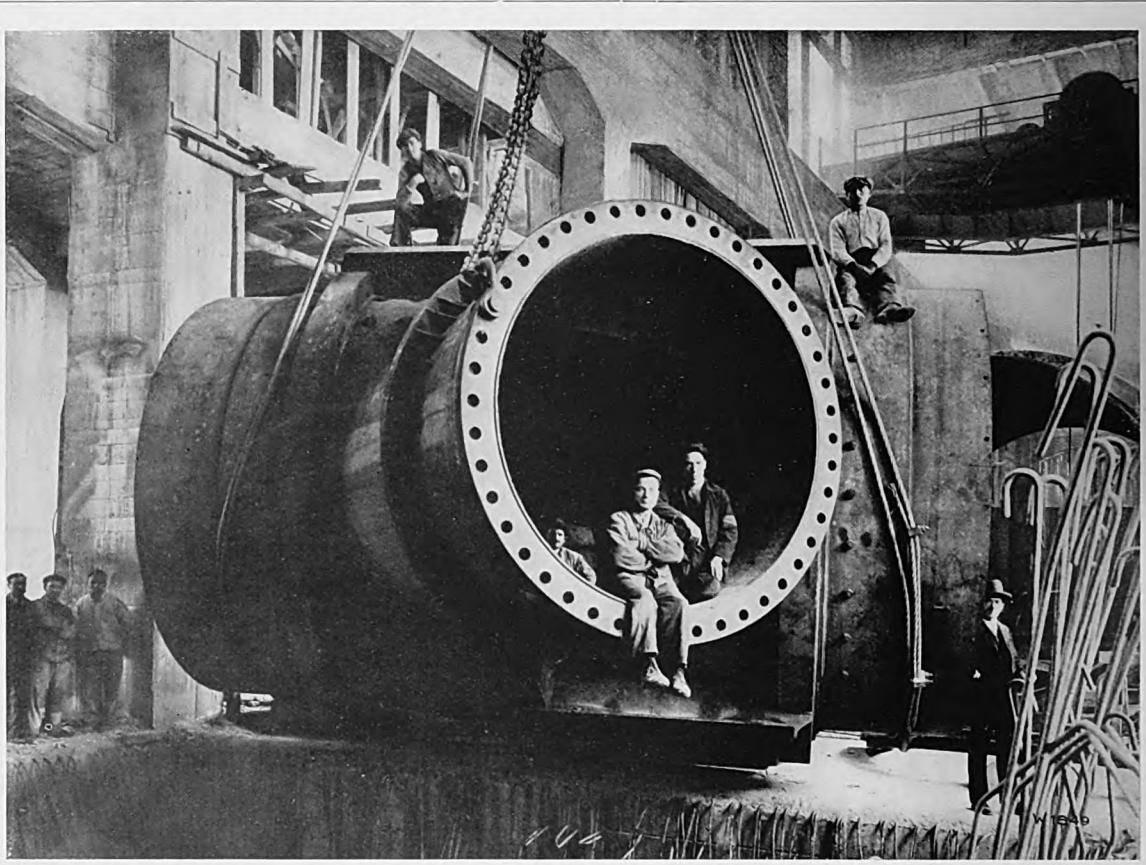

Fig. 10. Assembly and welding of the distributing pipeline sections in the machine house.

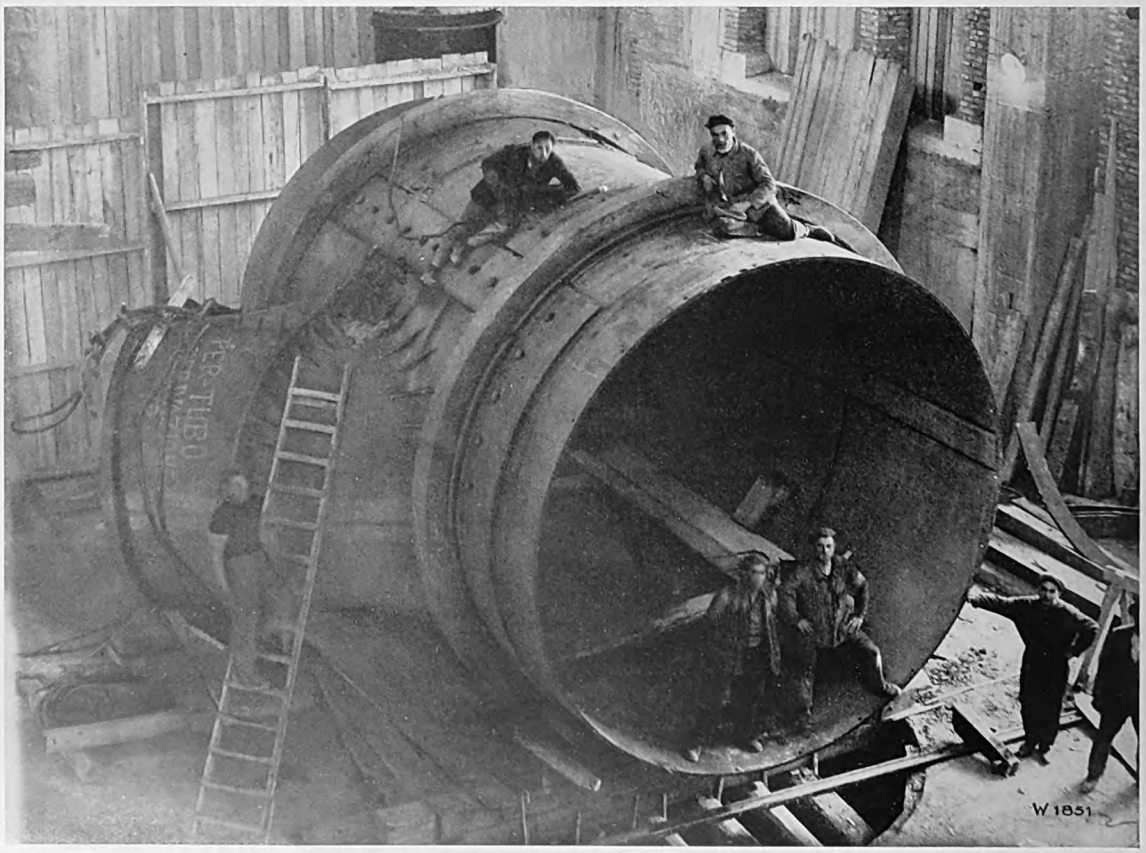

Fig. 11. Assembly and welding of the distributing pipeline sections in the machine house. The rings are already shrunk on.

Digitized by Google

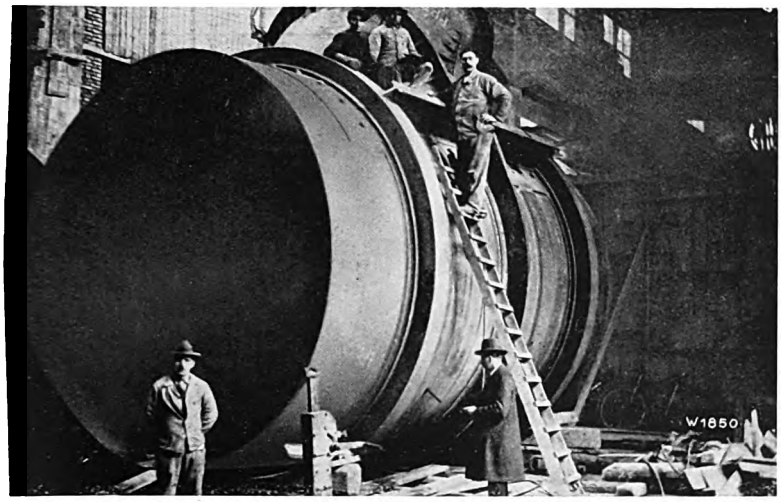

Fig. 12. Assembly and welding of the distributing pipeline sections in the machine house.

During the summer of 1928 the pressure tests and tension measurements were made on the finished pipeline with a test pressure equal to 1½ times the normal operating pressure. In view of the many novel features presented by the exceptionally large dimensions of the pipeline, the use of nickel-steel and electrical welding, great importance was attached to the careful measurement with Huggenberg tensometers, especially of the distributing pipeline and its inlet bend. The object of these measurements was to ascertain the distribution of tensile stress in those pieces, which do not lend themselves readily to exact calculation. The measurements were also prompted by the consideration that with nickel-steel of high mechanical strength and correspondingly less elongation, a compensation of local tensile stresses does not take place so readily as with a soft and tough material. The tests proved what we had surmised, viz. that at individual points higher local stresses prevailed.

For these reasons, a subsequent reinforcement of the distributing pipeline and of the upper bend in the shaft was, therefore, carried out. This reinforcement consisted of circular straps welded on stepwise, Figs. 15 and 16, which especially relieved the corner straps of the bend. The inner side of the corner strap joints of the two bends was also reinforced by means of one-sided Höhn straps. These reinforcements could be easily applied to the electrically-welded object and were also electrically welded on. The whole process proved in the most striking manner that electrical

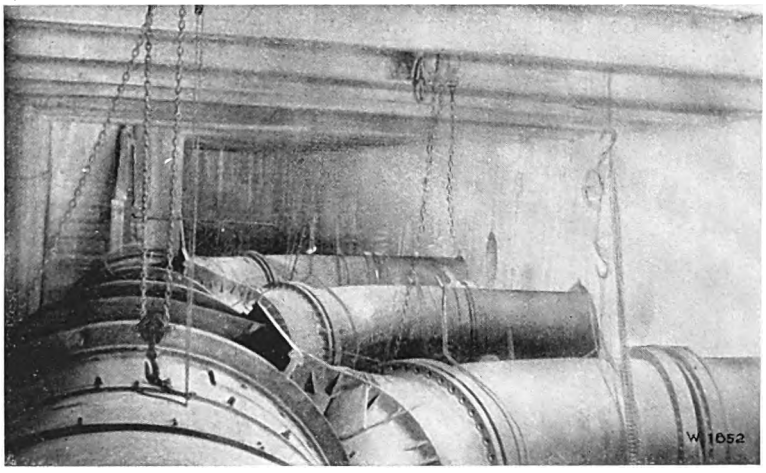

Fig. 13. View of the distributing pipeline in the cellar.

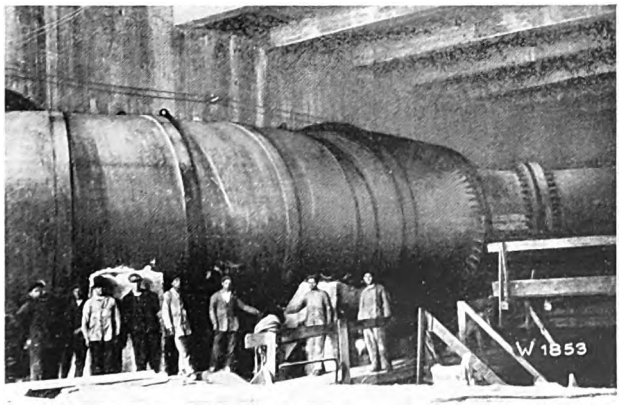

Fig. 14. Side view of the distributing pipeline before being reinforced.

welding permits parts being subsequently reinforced, which have been found by exact investigation to require the same. As may be inferred from Fig. 15, the circular straps added later did not impair the appearance of the construction. The Höhn straps used in conjunction with electric welding, have also proved to be a very practical means for the subsequent reinforcing of welded objects. A similar method of reinforceing a rivetted vessel of such dimensions would simply have been impossible.

The complete pipeline was executed according to the plans of Messrs. Escher Wyss & Co. in colla-

Digitized by Google

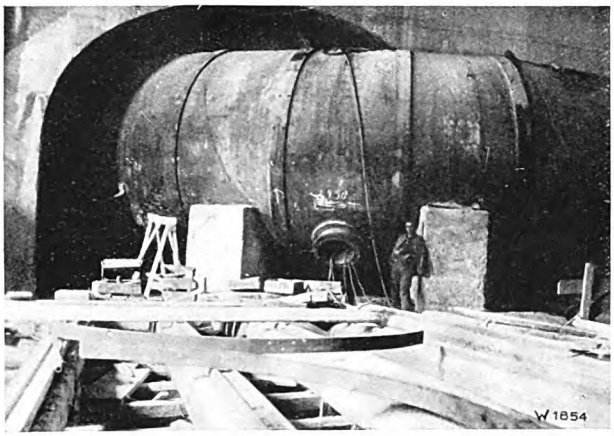

Fig. 15. The inlet bend of the distributing pipeline before being reinforced.

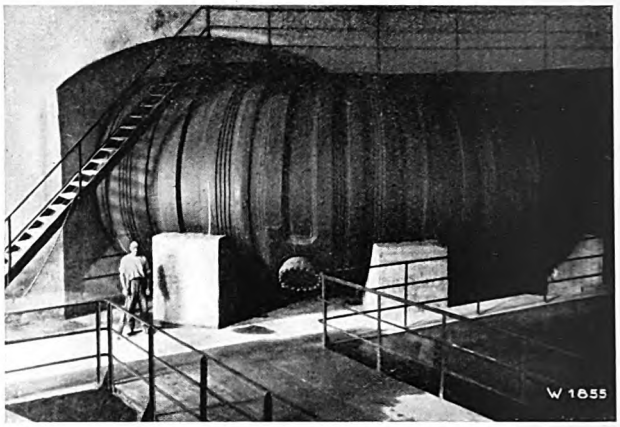

Fig. 16. The inlet bend of the distributing pipeline after being reinforced.

boration with the Società Terni, in whose steelworks in Terni the sheet metal and the pipeline sections were manufactured. The assembly of the pipeline sections and of the distributing pipeline in the Terni Works was supervised by the staff of Messrs. Escher Wyss & Co., and likewise the complete welding operations with the assembly of the whole pipeline on site. A staff of welders was trained in Terni under the supervision of foremen of Messrs. Escher Wyss & Co.

The pipeline has been in service since the Spring of 1929, at first with one turbine of 50 000 HP and now with three such units.

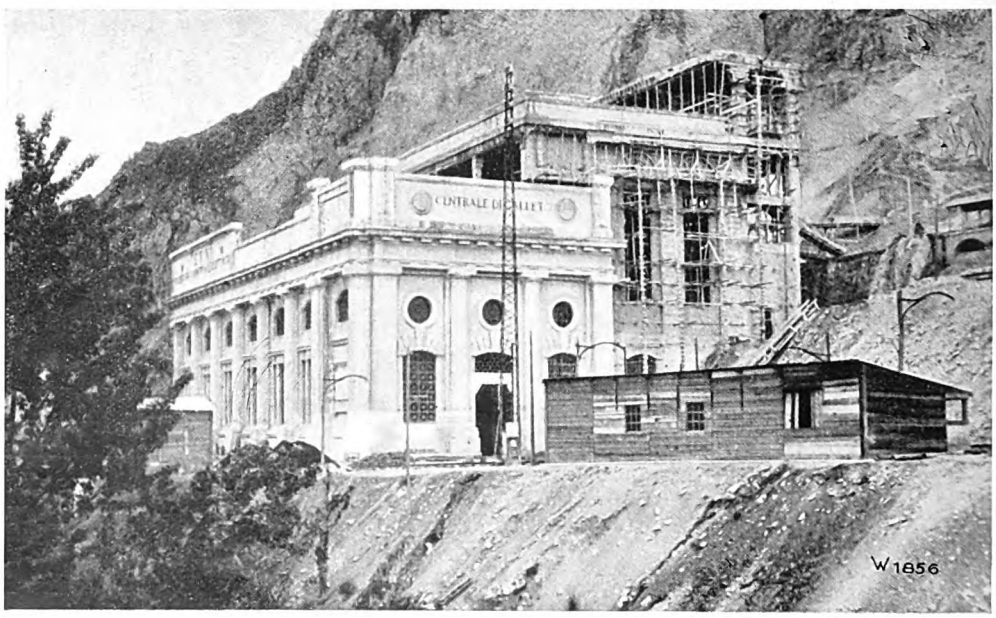

Fig. 17. View of the Galleto power station.

Digitized by Google

The Shannon Power Station in Ireland.

By G. Scholl.

The young and rising republic of Ireland has decided on a vast economical programme, which, among other items, provides for the supply of electrical energy to the whole country for industrial and agricultural purposes. To this end, the water

Fig. 1. Surge chamber and power station.

power of the River Shannon is to be utilized. The Irish Government has entrusted the firm of Siemens-Schuckertwerke in Berlin with the planning and execution of the whole plant, which when completed will have a total capacity of 232 000 HP. This output will be produced by six machine units, each of a capacity of 38 700 HP, and consisting of a Francis spiral turbine with a directly coupled generator. The maximum head is 110 feet. As for constructional reasons, Kaplan and propeller turbines cannot be considered, high-speed Francis spiral turbines of 150 r. p. m. corresponding to a specific speed of $n_s = 400$ were selected. The splitting up of the total output in six machine units of equal size was dictated by the requirement that the capital expenditure on the power station should be as small as possible and the mean efficiency as high as possible.

The water level of the tail race is subject to great fluctuations as it is exposed to the influence of the tides of the Irish Channel and gives differences amounting to as much as 22 feet. The selected type of turbine is best suited for such conditions. The runner wheel of the turbine has been so set that only a small suction head exists at the low tide water levels, and the danger of corrosion in the blades, which is imminent with high-speed turbines, has thereby been avoided.

The machine house is situated at the end of a head race 20 miles long, which terminates in a surge chamber of 86 feet height, founded on rock. From this latter, Figs. 1 and 2, six iron pipelines each 20 feet diameter lead to the turbines. A tail race of 4 miles length conducts the water utilized by the turbines back to the River Shannon. Fig. 2 is a sectional elevation of the surge chamber with the pipelines and power station, whilst Fig. 3 is a plan of the water power plant and Fig. 4 a sectional elevation of the power station.

The three-phase generators are erected at such a level that there is no danger of them being flooded even at the highest tail race level.

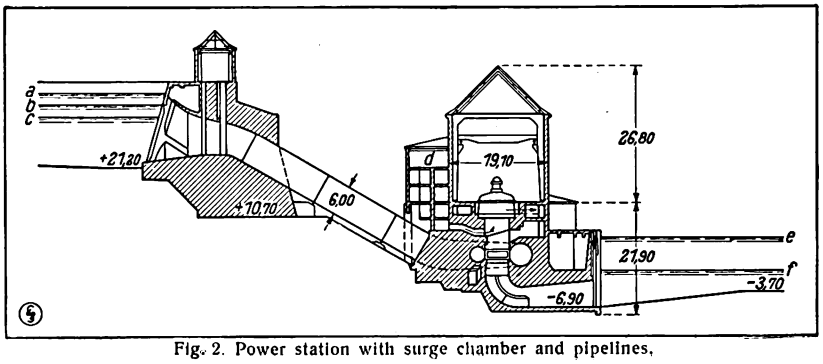

Fig. 2. Power station with surge chamber and pipelines.

Digitized by Google

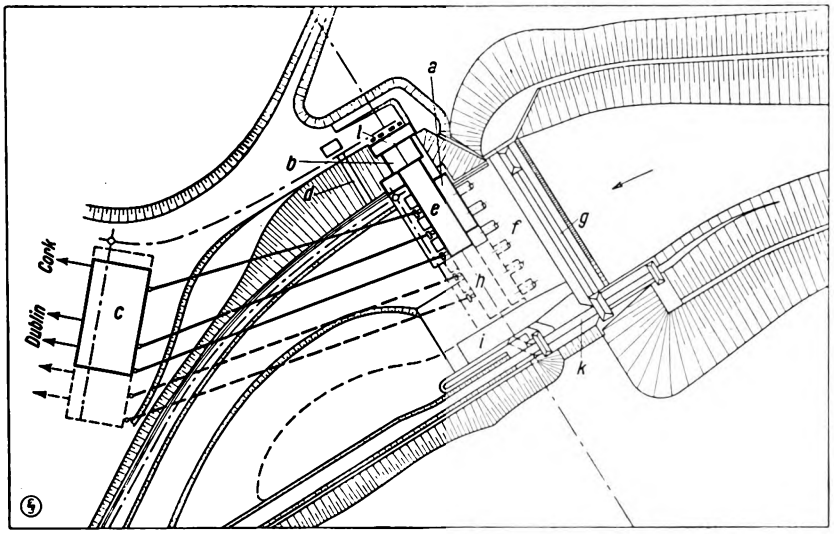

Fig. 3. Plan of the water power plant.
e = Machine house; g = Surge chamber; h = Contemplated extension.

Three turbine units of the above-mentioned capacity, which have been ordered from the firms of Escher Wyss & Co. and J. Voith in Heidenheim on the Brenz (Wurttemberg), constitute the first instalment of machines for the power station. Figs. 5, 6, 7, 8 and 9 illustrate the Escher Wyss turbine during different stages of its erection on site. Fig. 10 is a sectional elevation of the turbine. Regarding the constructional details the following remarks may be of interest:

The cast-steel runner wheel with cast-in sheet steel blades has a maximum diameter of 14 feet. To protect the wheel as far as possible against wear at the clearance, special steel rings are provided on the hub disc and on the outer rim, which are easily renewed. The guide apparatus is equipped with cast-steel blades provided with cast-on journals on each side, of which the upper one at the same time serves as connection to the regulating ring. The cast-steel centre ring forming the inner closure of the spiral casing is fitted in front of the guide apparatus. The spiral casing is of exceptional dimensions, the inlet diameter being 15 feet.

A conical pipe section and a bend establish the connection with the pipeline which is 20 feet diameter. The spiral casing was naturally transported in sections and riveted together with the centre ring on site. Figs. 11, 12 and 13 illustrate the casing and the inlet bend in course of construction in the workshops of Messrs. Escher Wyss & Co. It will be noticed that the casing was made in quarters, for which purpose one quarter of the centre ring was erected in the shops, which served so to say as templet for obtaining the exact form of the sections. This method permits the large castings being easily and handily manufactured. To reinforce the casing, the joints of the individual sections are connected by means of strong

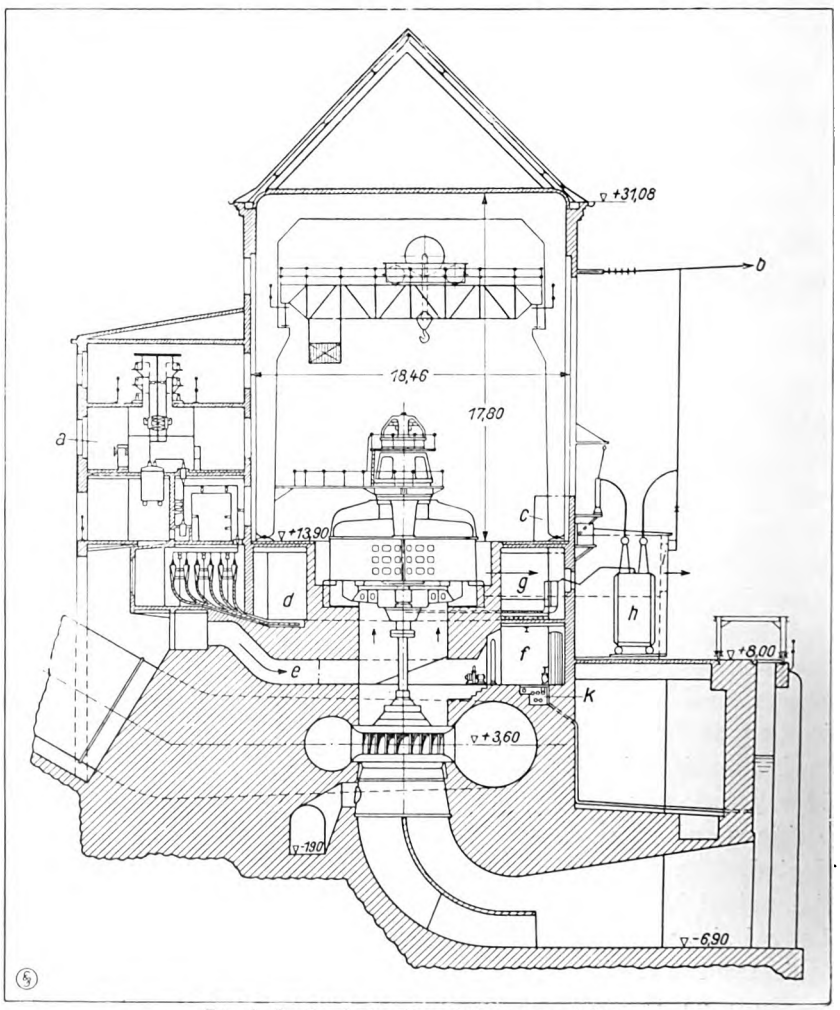

Fig. 4. Sectional elevation of the power station.

Digitized by Google

Fig. 5.

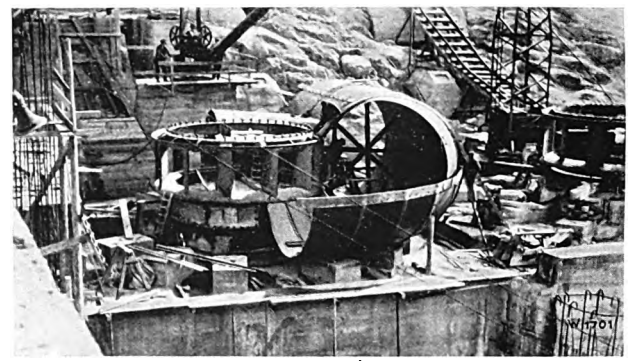

Fig. 7.

straps. The maximum diameter of the spiral casing is 45 feet.

The water leaving the runner wheel passes through a draught tube, armoured in its upper part with sheet metal, and provided with a central partition to obtain a more regular flow of the water. In addition, a concrete pillar is provided at the outlet of the draught tube in order to support the large span of 45 feet.

The leakage water escaping from the combined hydraulic and olivite gland at high tide is removed by a special pump.

The turbine shaft is supported in a white metal bearing, automatically lubricated by means of a small toothed wheel pump arranged in the lower oil reservoir. The very massive bearing block at the same time serves as support for the regulating ring which is connected by means of tension rods with the two servomotors for the regulating mechanism. The servomotors perform a total regulating work of 115 200 ft. lbs. and receive the necessary oil under pressure from special oil pumps driven by 60 HP electric motors, situated in the regulator corridor. A further oil pump supplying the oil for the thrust bearing is fixed above the bearing.

The rotating weight of the turbines and of the generators coupled together is 227 tons. Including the hydraulic thrust of 275 tons, the thrust bearing resting on the spider of the generator has thus to take up a total load of 502 tons. This load is transferred to the concrete substructure by a system of ferro-concrete beams of 8 feet height and thence to the bed of rock. The space between the lower side of these concrete beams and the spiral casings of the turbines embedded in concrete is employed on the head race side for the fresh air channels to the electric generators, and on the tail race side as access to the turbine covers, from which the guide blades are lubricated and the oil pumps for the turbine journal bearings attended.

The distance between centres of the individual machine units is 50 feet, and the diameter of the electric generators 24 feet. The space between the generators is utilized for running the various cables interconnecting the generators, transformers and switchboard plant.

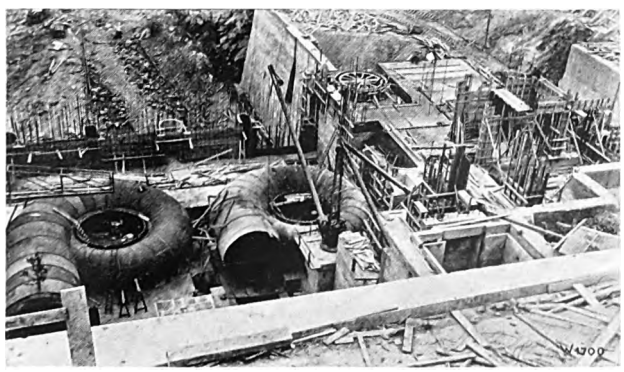

Fig. 6.

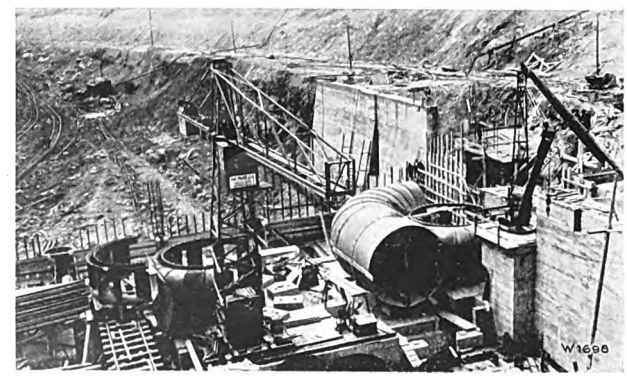

Fig. 8.

Digitized by Google

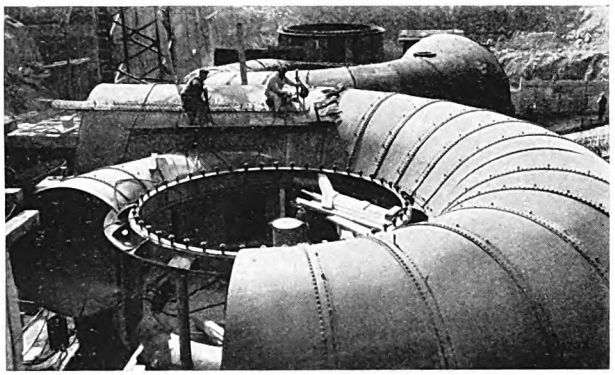

Fig. 9.

The turbine governors, with which the necessary apparatus and instruments for the operation of the plant, such as tachometer, pressure gauges and guide blade position indicator are connected, are situated on the generator floor level. The servomotors for adjusting the guide blades, and the pumps for producing the oil under pressure for the servomotors are located in a special corridor in close proximity to the turbines. This arrangement does not complicate the attendance of the plant, as in power stations of such size there are always several machinists on duty. The main duties of the attendants are performed in the machine room, which, therefore, also contains all the switchboards with the control apparatus and instruments required for the supervision of the service, such as wattmeters, telethermometers, etc. The corridor mentioned above is connected with the machine room by means of a staircase at each generator. In addition to the oil pumps for the turbine governors, this corridor contains the oil pumps for the generator guide bearings, carbonic acid batteries for extinguishing a fire in the generators, oil coolers for the main journal bearings, and the discharge funnels for controlling the whole of the cooling water circulation.

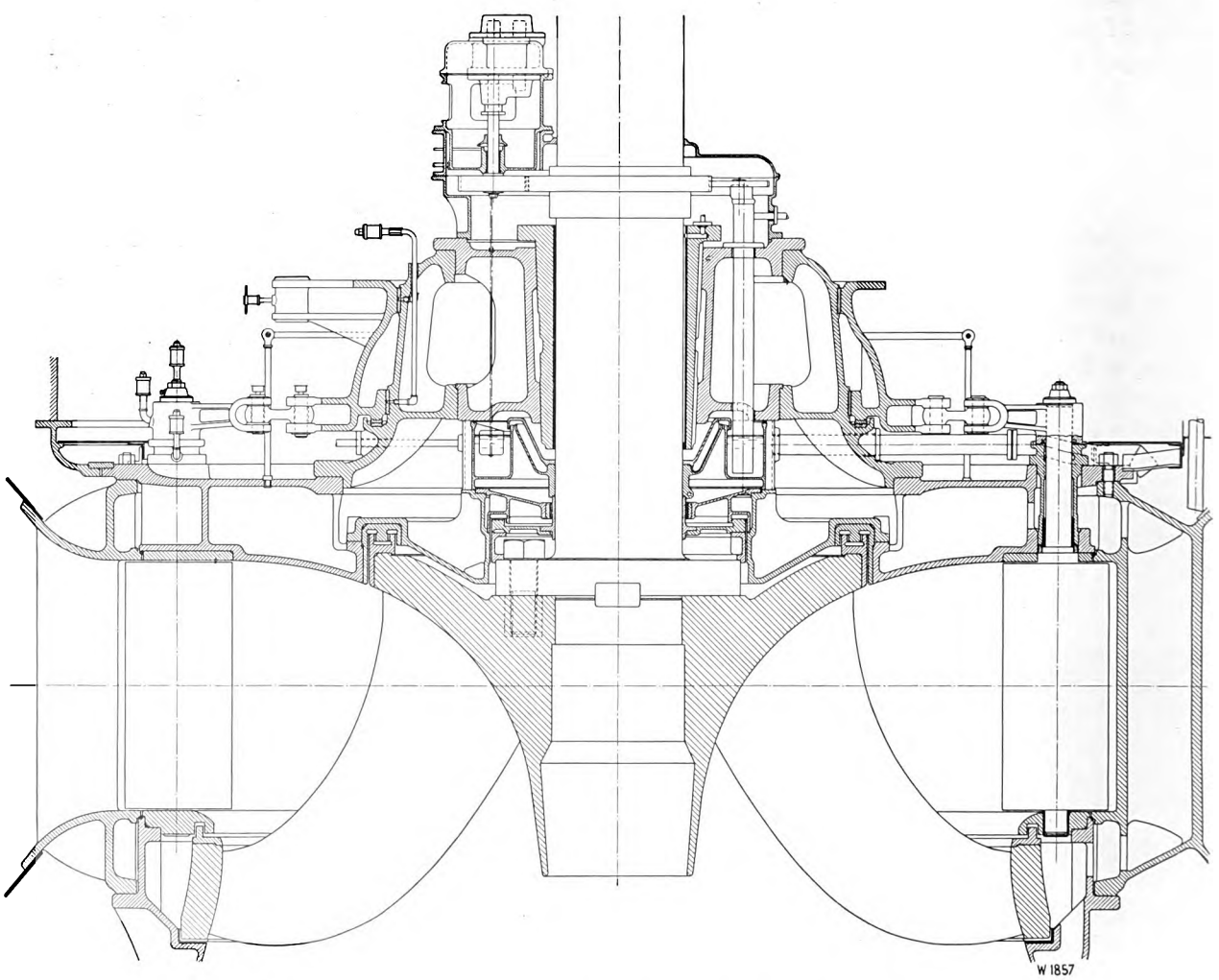

Fig. 10. Sectional elevation of the Shannon turbine supplied by Messrs. Escher Wyss & Co.

Digitized by Google

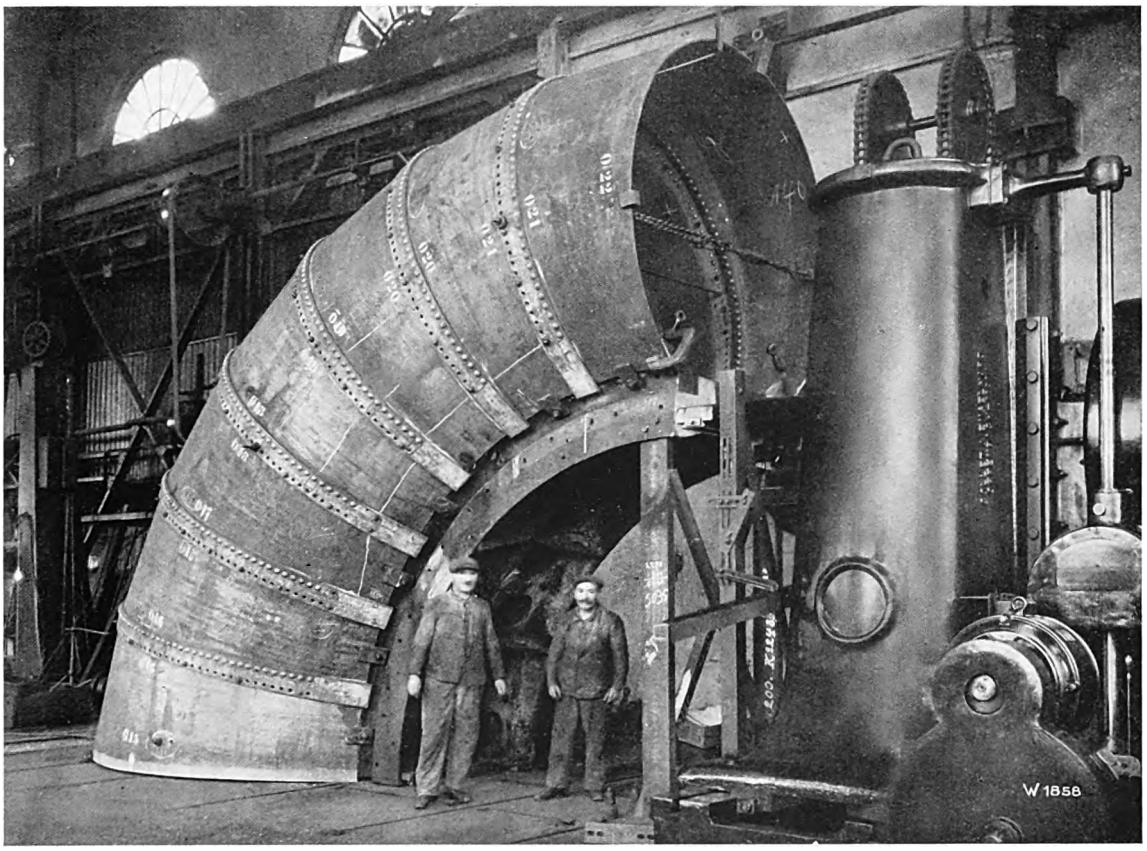

Fig. 11.

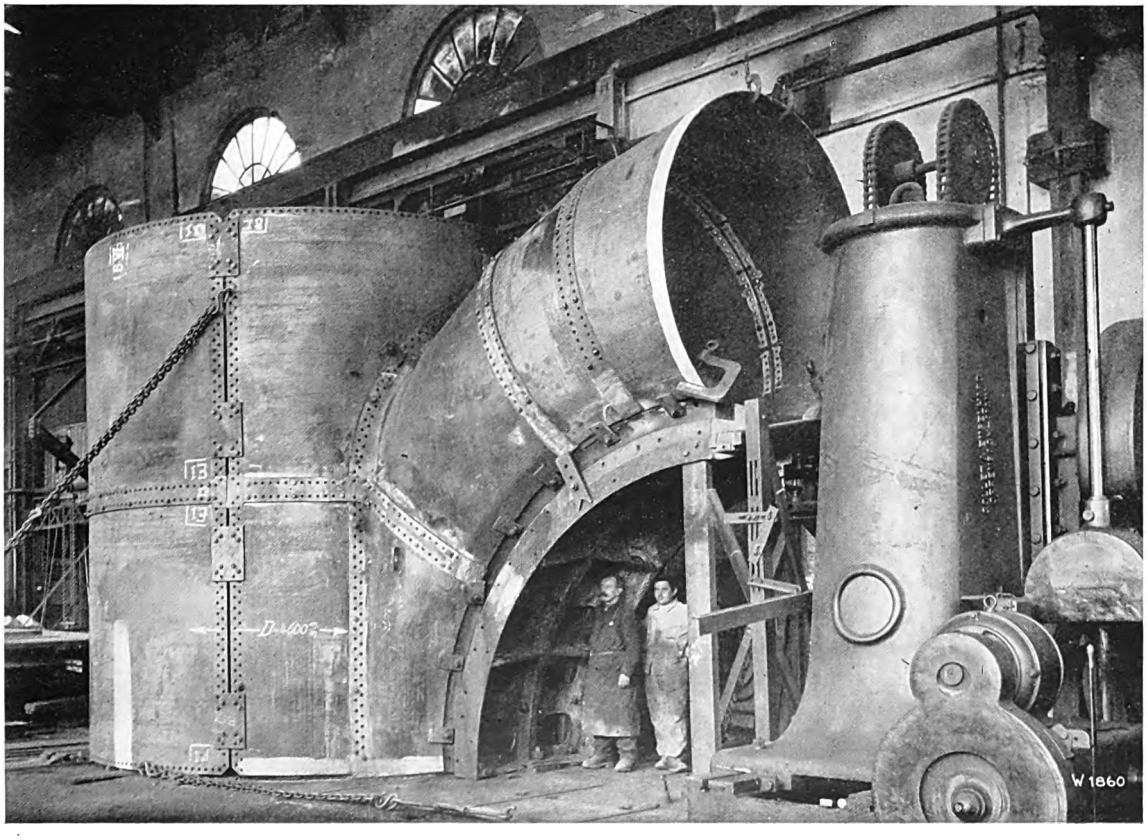

Fig. 12.

Digitized by Google

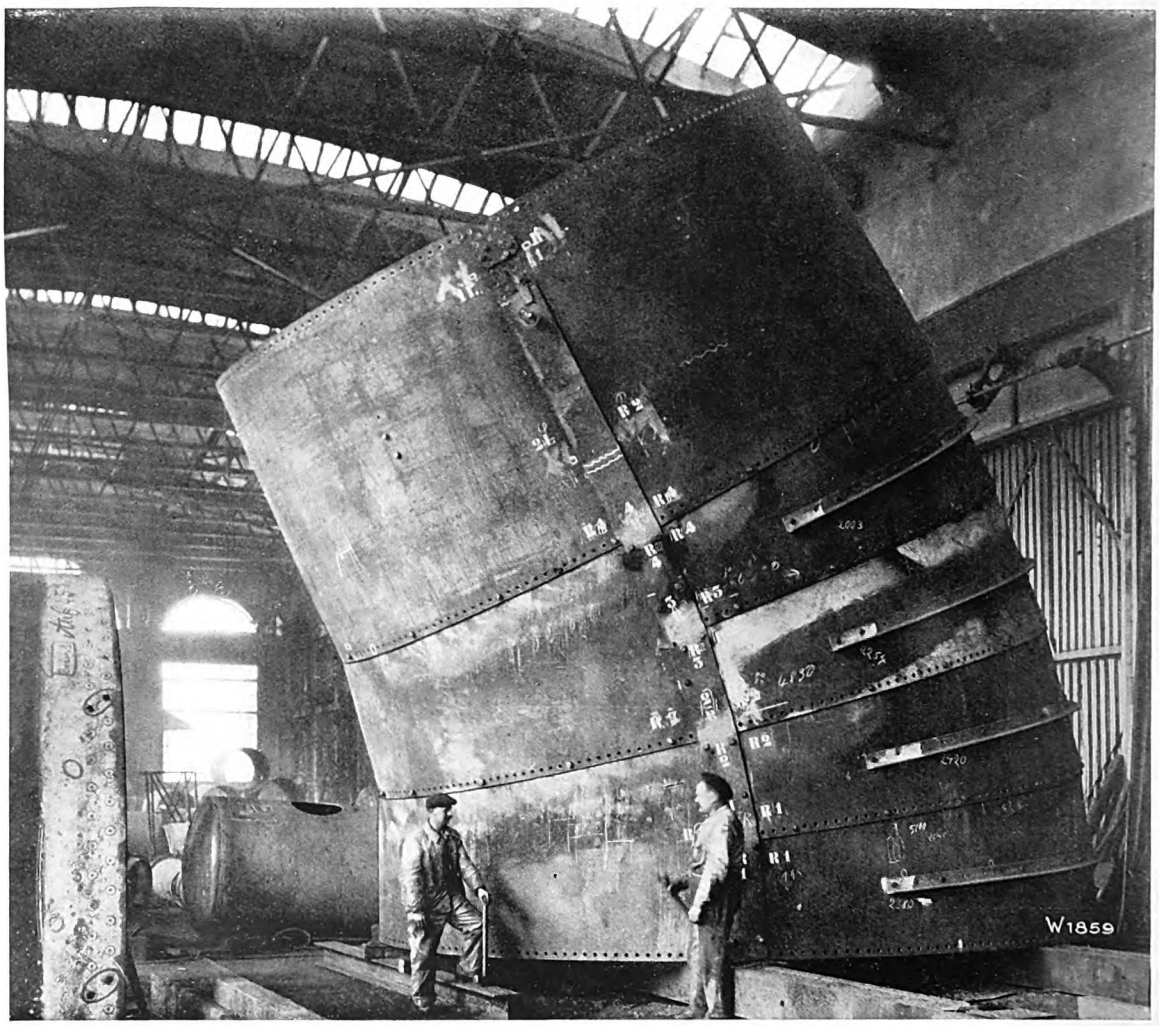

Fig. 13.

All auxiliary services are connected to a signalling system. In case of any one of these services failing, the machinist on the generator floor is at once warned by means of optical and acoustical signals.

Greatest importance was attached to utmost reliability in service and, therefore, the oil pumps for the servomotors adjusting the guide blades were interconnected by pipelines situated in the floor of the regulator corridor. These oil pipelines are so dimensioned that even when one pump fails, the full oil supply can be maintained by the remaining pumps. A spare pump driven by a 235 HP Escher Wyss auxiliary turbine is provided as a further security. This pump continually runs idle and in case of a failure of current at once takes over the oil supply. The auxiliary turbine is also coupled to a three-phase generator, which supplies the current for the requirements of the power station.

The reliable supply and supervision of the cooling water for the main thrust bearings and the governor oil pumps required the greatest attention. With the thrust bearings, the oil continually circulated by a special pump is forced through a cooler situated in the corridor. In addition, each thrust bearing is provided with a cooling coil, which enables the bearing being kept in service without harm for at least two hours after a failure of the oil supply. The cooling water is derived from the head race. The three turbines are connected to a common cooling water pipeline, which is also laid in the corridor and is easily accessible. The cooling water pipes for each unit are centralized in a discharge funnel where the discharge of the water may be controlled at any moment through an electrically illuminated window.

The machine hall has a height of 59 feet and a

Digitized by Google

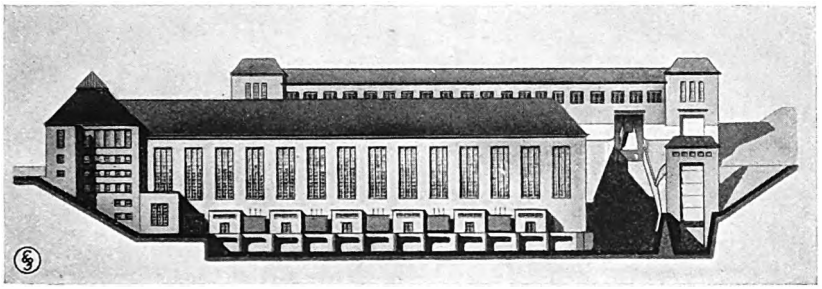

Fig. 14. The power station viewed from the tail race.

width of 61 feet and is equipped with 2, three-motor travelling cranes of 100 tons capacity each. For inspection or replacement of the thrust bearings, the complete rotating parts of one unit weighing 245 tons may be raised. The hoisting speed is thereby reduced to one-tenth of the normal speed by means of an auxiliary gear in order to prevent damage inside the turbine through raising the parts too suddenly. Fig. 14 is a view of the power station as seen from the tail race.

In addition to the above-mentioned deliveries Messrs. Escher Wyss & Co. also received the order for the machine to clear the gratings. This machine is equipped with three electric motors actuating the hoisting, tipping and travelling mechanisms. The motors are electrically interlocked so that only one motion at a time can be operated. The machine distinguishes itself from other designs by its simple construction and reliable functioning. We will refrain from giving a detailed description of this machine here, as it was fully described in our „Escher Wyss News" No. 2/1929 *). We, therefore, restrict ourselves to the following short remarks:

The gratings of the Shannon power station have a total width of 297 feet, the grating bars being 42 feet long. A complete cleaning cycle is performed in the following manner:

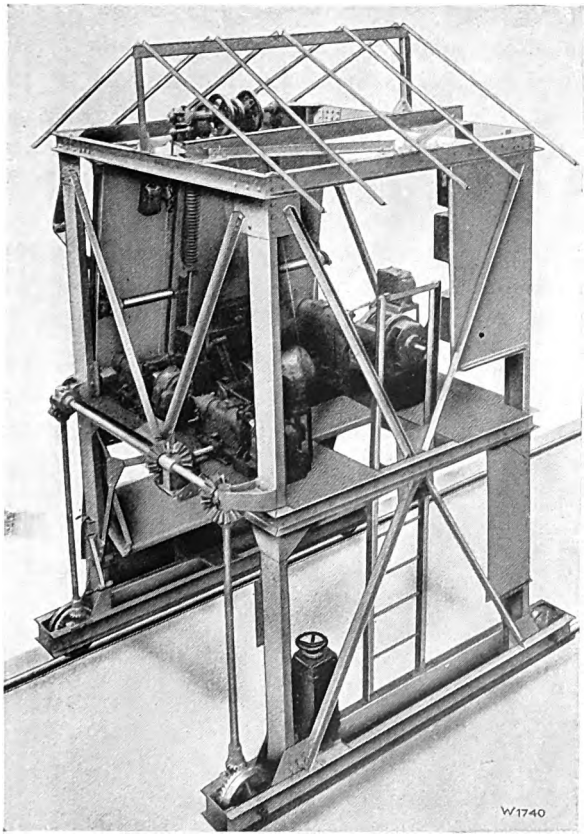

Fig. 15. Machine for clearing the gratings.

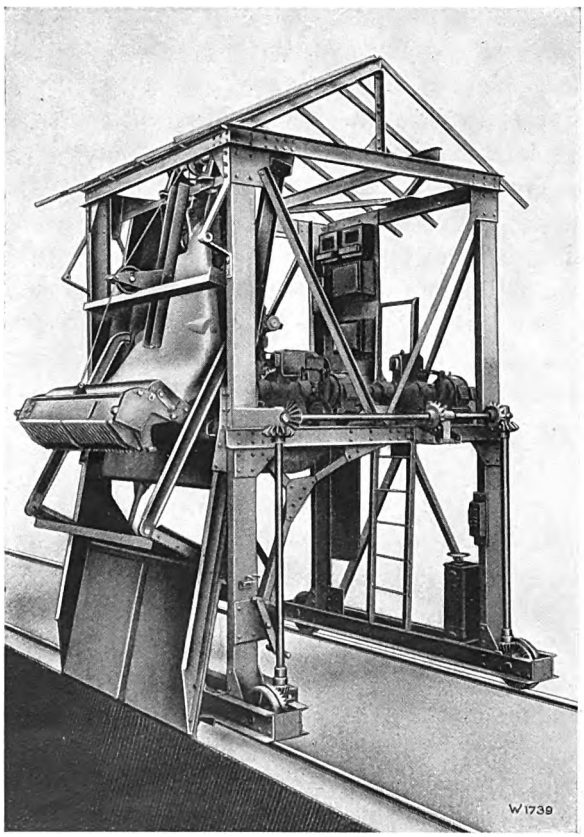

Fig. 16. Machine for clearing the gratings.

*) G. Grossmann: Grating cleaning machines

Digitized by Google

Fig. 17. Machine for clearing the gratings.

Fig. 18. Machine for clearing the gratings.

The machine is run to a certain point of the grating. By means of a controller, the rake carriage is lowered and the rake thereby sweeps over the whole height of the grating, removing any foreign bodies and rubbish in its way. Thereupon the carriage is raised into its initial position whereby the prongs of the rake grip in between the grating bars and automatically yield when they encounter resistance from a body firmly jammed between the bars. With other constructions, the rake only glides on the surface of the grating, which, however, does not ensure efficient cleaning. This process is repeated as often as is necessary to thoroughly clean the section under treatment. The machine is then moved one section to the right or left and the performance repeated until the whole grating is perfectly clean, which requires about 1 hour and 52 minutes. Fig. 15, 16, 17 and 18 illustrate different views of a machine of similar design.

Finally we wish to tender our thanks to Messrs. Siemens-Schuckertwerke in Berlin, who kindly lent us the blocks for the Figs. 2, 3, 4 and 14.

Digitized by Google

Plant for Salt Works.

By R. Peter.

As a result of supplying vapour recompression and concentrating plants Messrs. Escher Wyss & Co. [1]) have gained experience also in the construction of equipments for salt works. Their activities[2]) in this special line led very early to a close cooperation with important German salt works. Messrs. Escher Wyss & Co. are today in a position to undertake orders for the complete equipment of salt works to produce high-grade fine salt. An arrangement for the simultaneous production of fine and coarse salt is at present being studied. A large evaporating plant for the concentration of brine to recover salt was designed for the Bavarian Salt Works at Reichenhall and this plant has been operating with excellent results for more than two years. A still larger plant for another salt works in Europe is being erected at the time of writing.

The advantages, which Messrs. Escher Wyss & Co. offer with their salt works plants are numerous. The construction of evaporating plants for all kinds of solutions employing the vapour recompression system formed a wide basis for the calculation of evaporating apparatus. The increased requirements of the vapour recompression system have done much to develop the design and lay out of the plants. Close cooperation with salt works enables the firm to be in constant touch with salt production in practice and thus to gain first-hand experience, and this ensures that Messrs. Escher Wyss & Co. are in a position to supply appropriately designed equipments.

The efforts of the firm are primarily directed towards building plants on the most modern technical principles. When speaking of modern salt works, we must for a moment revert to the history of salt works, which in many respects is characteristic of the entire development of this industry.

Salt production is one of the oldest industries. Apart from the recovery and transport of the brine, evaporation forms the chief process, and hence the fact that the technique of evaporation owes much to the salt works is, therefore, not surprising. Fundamental processes, such as the vapour recompression process, originated in salt works or were at least employed there for the first time, and in this connection the names of Rittinger, Piccard, Schäffer and Buddenberg are conspicuous. The main systems for obtaining economic results were elaborated by experts at a very early date but the means to really render these systems economically superior, were, however, only created by modern technics. Here also, as in so many other branches of study, the ideas had far outrun their practical and economical realization. The fundamental principles for the design of modern salt works were established decades ago.

Before discussing the systems, we will deal with the quality of the salt produced and the methods of production concerned.

Salt quality.

The quality of the salt plays a very important part on the salt market of countries which have and which do not have salt monopolies. In the latter, where the salt works compete with each other, this is the case to a very marked degree. Not only is the purity of the product important, but especially the granular structure of salt, and in this connection the production process primarily determines the quality. The mineral salt won in mines and the salt recovered in marine salt works, in which latter salt is produced from sea water by evaporation through

[1]) Cooperating with Messrs. Kummler & Matter in Aarau.
[2]) Especially that of Messrs. Kummler & Matter A.-G.

Digitized by Google

the sun, is mostly of inferior quality. The product is not very pure and its appearance indifferent. The best quality of salt is obtained by evaporating so-

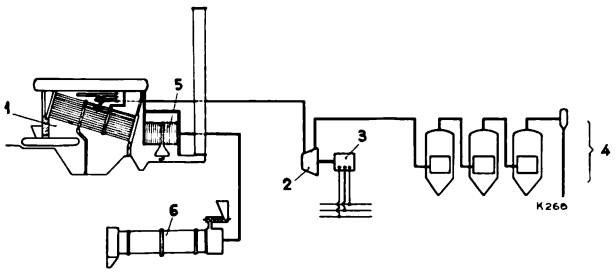

Fig. 1. Diagram of a salt works with limited use of the back-pressure system.

1. Steam boiler
2. Back-pressure steam turbine
3. Generator for electric current
4. Multiple effect evaporator
5. Air preheater
6. Drying cylinder.

lutions of salt, termed brine. These are relatively pure and mostly saturated solutions of salt, which are produced either by solving mineral salt or the

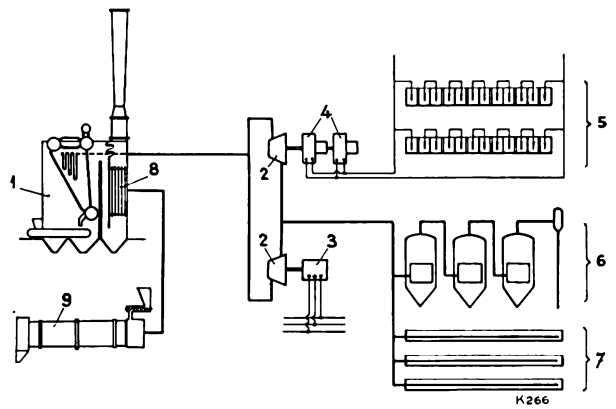

Fig. 2. Diagram of a salt works with back-pressure service and adjoining electro-chemical works.

1. Steam boiler
2. Back-pressure turbine
3. Generator for electric current
4. Direct current generators
5. Electrolytic plant
6. Multiple effect evaporator
7. Steam pans
8. Air preheater
9. Drying cylinder.

salt from marine salt works. Direct evaporation of sea water does not enter the question owing to the comparatively small content of salt and the large quantities of other salts solved therein. The cost of evaporation, even if only an inferior salt were produced, would be unreasonably high. Mineral salt is generally dissolved in the following manner: after striking a vein in a mine, water is conducted to the salt and allowed to become saturated, whereupon it is pumped out. The best quality of salt with regard to purity is obtained by chemical treatment of the brine before evaporation to precipitate the foreign salts, such as lime, chalk, etc.

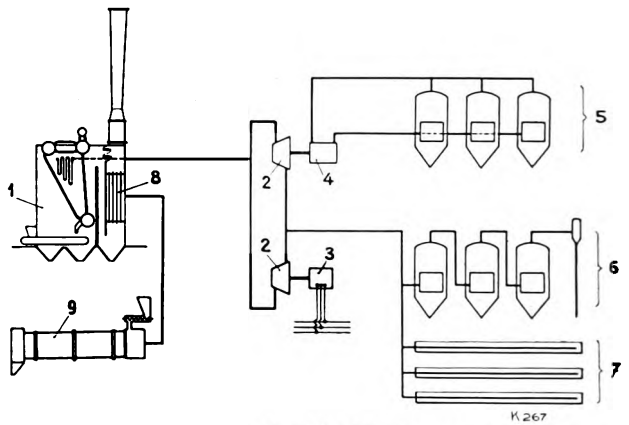

Fig. 3. Diagram of a salt works with back-pressure service and vapour recompression plant.

1. Steam boiler
2. Back-pressure turbine
3. Generator for electric current
4. Vapor compressor
5. Autovapor recompression evaporating plant
6. Multiple effect evaporator
7. Steam pans
8. Air preheater
9. Drying cylinder

Two fundamentally different processes for the evaporation of the brine are, the evaporation of the brine in open pans and the evaporation in closed apparatus, there being a marked difference between the salt produced by the two processes.

Pan salt, which in accordance with its structure is also called coarse salt, was first produced. The brine solution, according to the size of the grain of salt to be produced, is kept at a temperature of from 160° to 220° Fahr. in open, flat vessels, called pans, either by direct contact with a fire, or in modern practice by steam heating. Under these conditions the water evaporates without the solution boiling. After reaching the required degree of saturation, the characteristic salt particles in the shape of pyramids open on one side are formed on the almost placid surface, which on attaining a certain size sink to the bottom. These flaky particles, which may become several fractions of an inch large, are composed of numerous very fine salt crystals. Thus «pan salt» is bulky and distinguishes itself by its easy solubility. In the technical sense, the pan system corresponds to the single effect, i. e. to a process in which inferior utilization of heat is obtained.

Digitized by Google

In the closed evaporators. the brine solution is boiled by means of steam. The water here does not simply evaporate, but is violently turned into steam as in a steam boiler and the boiling process is not restricted to certain temperatures. The particles of salt are no longer formed on the surface of the boiling solution, but during the flow of the latter through the heating system and boiling chamber of the apparatus. The salt thus recovered, evaporator salt, which in view of its appearance is also frequently called fine salt, is almost entirely composed of single crystals of less than 0.004″ and up to several fractions of an inch in length. These fine and regular crystals impart a very fine appearance to the product. The closed apparatus allows multiple effects being employed, which are far more economical than pans working on the single effect principle.

Both qualities, the pan salt and the evaporator salt, have their markets. The requirements of the purchaser play a part, which should no be underrated. The former quality is much used in kitchens and for preservation purposes; the latter quality is employed as table salt and is also largely used by chemical works. Practically all salt works will, therefore, produce both qualities and for this reason be equipped with pans and evaporators. In view of its greater economy in production evaporator salt is destined to play an increasingly important role. On the other hand it is out of the question that the pan salt will be completely substituted by evaporator salt in the near future. The quantities of pan and evaporator salt to be produced by a salt works solely depend upon the demand of the salt market.

The lay-out of modern salt works for the production of evaporator salt.

The evaporation of the brine solution involves a theoretical problem of the utilisation of heat. A salt works with its heavy heat consumption is ideal for back-pressure service, in which high-pressure steam is generated in boilers and utilized in back-pressure turbines for power production, whilst the exhaust steam is employed for heating the apparatus producing the salt. With this system, the conditions governing the production of certain qualities of salt, mentioned in the preceeding chapter, must be taken into account.

The diagrams, Figs. 1 to 3, illustrate the main systems for improving the operation of salt-works from the point of view of heat and general economy.

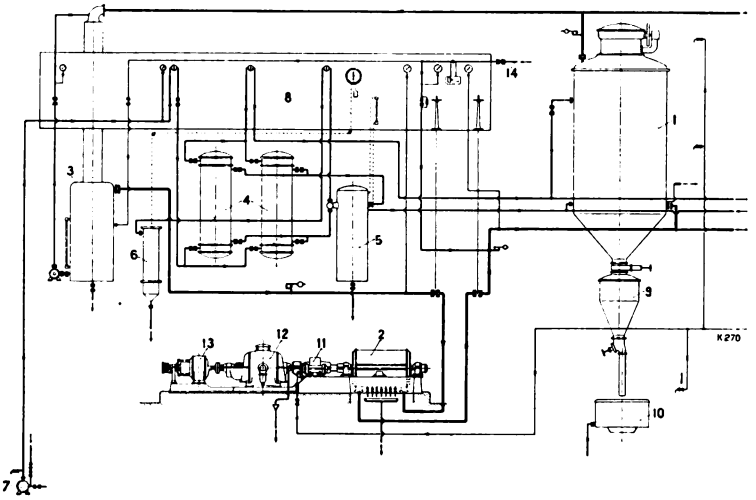

Fig. 4. Diagram of the lay-out of the Reichenhall plant.

With the solution according to Fig. 1, the energy generated in the back-pressure system is only utilized for covering the power demand of the auxiliary plant, such as the pumps, elevators, drying cylinders, etc. Such arrangements are used for medium sized plants with multiple effects, which moreover operate with relatively low boiler pressures. However, the salt works can already save the costs for the purchase of energy and thus render themselves almost independent as regards power. This system has been adopted by many salt works in recent years and corresponds to the method extensively practised in other works.

In the two other diagrams, the heat efficiency of the salt works has been still further developed. The diagram, Fig. 2, illustrates the case where an excess of energy is produced in back-pressure operation by the provision of modern high-pressure steam boilers. Over and above the energy required for the salt works proper, a certain amount of energy is available for other purposes. This excess of energy becomes most important when the salt works apart from the multiple effects operate with steam-heated instead of fire-heated pans. As the diagram indicates, the excess energy is utilized in an electro-chemical works in which caustic soda,

Digitized by Google

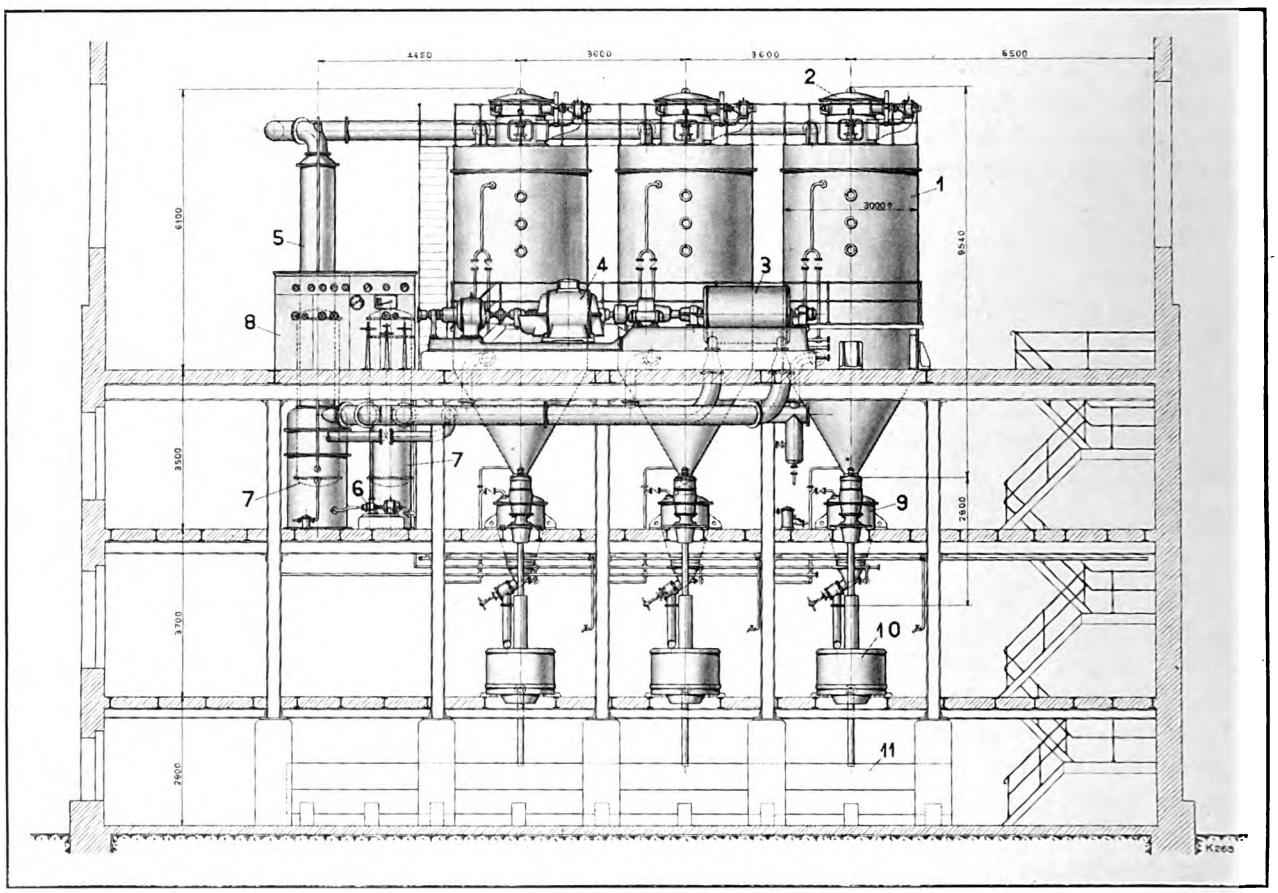

Fig. 5. Sectional elevation of the Reichenhall plant.

1. Evaporators
2. Scraper drive
3. Steam turbo-compressor (heat pump)
4. Motor for driving compressor (with variable speed)
5. Vapour washer and dryer
6. Washing water pump
7. Preheater
8. Central control stand with main operating valves and instruments
9. Salt discharge
10. Centrifugal with direct-coupled driving motor
11. Brine supply and accumulating trough
12. Brine pump

chlorine and hydrogen is produced by the electrolysis of salt, as shown in Fig. 2. This method of arranging the plant suggests itself in view of the main product being "salt". The possibilities offered by modern high-pressure back-pressure systems may be realized by this method of laying out the plant, if the system is really adopted throughout. Heat production must be centralized in the steam boilers and the apparatus for the production of salt must be designed for steam heating.

Another way of arriving at this result is shown in diagram, Fig. 3. Here the excess energy is used to operate a salt producing plant with vapour recompression, on the assumption that steam-heated pans are provided. On the other hand it is possible that no multiple effects are used at all and only steam-heated pans and a vapour recompression plant operated by the excess energy are provided. These systems do not go beyond the actual scope of a salt works, i. e. they are restricted exclusively to the production of salt. The production of caustic soda for the own needs of the works to soften the brine solution might possibly also be considered.

The following table is a survey of the relative production costs for salt according to the three solutions, whereby the cost of the simplest system, diagram, Fig. 1, is taken to be 100 per cent.

Digitized by Google

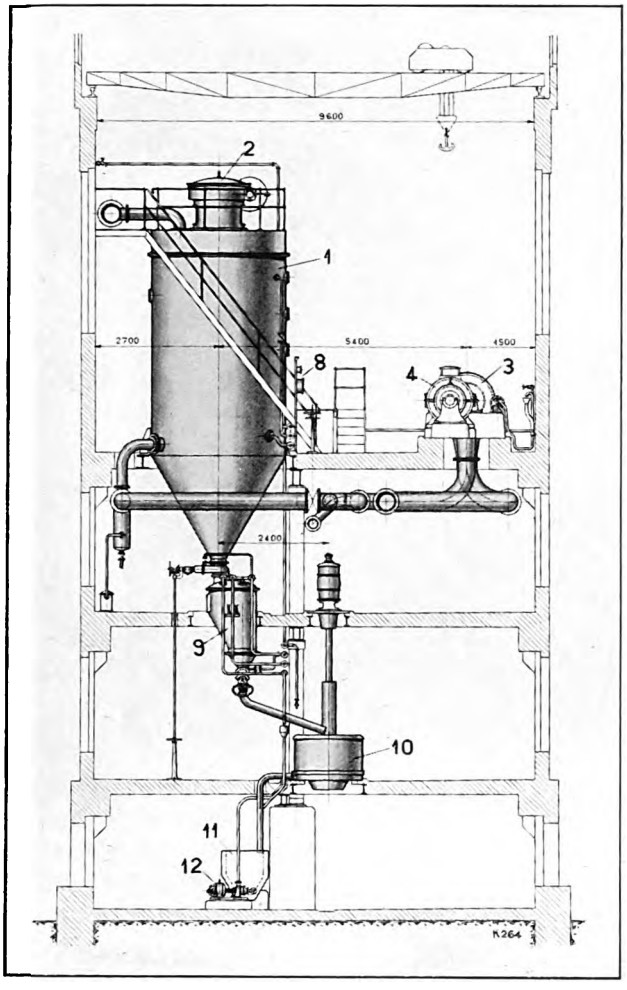

Fig. 6. Elevation of the Reichenhall plant.

1. Evaporator
2. Scraper drive
3. Steam turbo-compressor (heat pump)
4. Motor set for driving compressor (with variable speed)
8. Centralized control stand with main closing organs and instruments
9. Salt discharge
10. Centrifugal with direct-coupled driving motor
11. Brine supply and accumulating trough
12. Brine pump.

	I.	II.
1) Multiple effect evaporators, or steam pans, with power production in back-pressure operation to cover own power requirements	100 %	100 %
2) Multiple effect evaporators, or steam pans, with power production in back-pressure operation to cover own power requirements and to operate electrolysis plant	65 % to	70 %
3) Operation as under 2), however, instead of electrolysis plant, provision of a vapour recompression plant	75 % to	90 %

The capital charges have been taken into account in the calculations. For column I and II certain conditions have been assumed regarding the quantities of pan salt and evaporator salt produced. The lower values of 2) and 3) (col. I) are obtained when more than $^2/_3$ of the total production are evaporator salt, the higher values (col. II), when more than $^2/_3$ of the total production are pan salt. The boiler pressure is taken to be 570 lbs/sq. in. The values of 2) and 3) could be further improved by adopting super pressures. The wholesale market prices have been taken as a basis for the chemicals produced. Special conditions, for instance the utilization of cheap external power, may result in still lower values than indicated under 2) and 3).

Bearing in mind that the production costs of the salt of very many existing salt works are considerably higher than those resulting from evaporation according to 1) of the table, it is evident that considerable savings on production costs may be effected by adopting the above-mentioned systems. The greatest possibilities are offered by system 2). However, here we have to remember that a chemical process is added to the salt production. The salt works thus enters a field of the chemical industry and must place its chemical products on a market, which is dominated and controlled by the large chemical concerns.

After giving this general information, we will now proceed to discuss the design of the apparatus, which render the realization of the different systems possible. The appropriate design of the apparatus to a very large extent influences the attainment of the object in view, viz. the improvement of economy in the production of salt. In describing the Reichenhall plant, we will endeavour to give our readers some idea of the lay-out of the installation and of the design of the machinery and apparatus, which our firm has evolved during years of intensive collaboration with salt works. We may restrict our description to the technical parts dealing with salt, inasmuch as it may be assumed that the other parts, such as back-pressure steam turbines or steam boilers are common knowledge.

The concentrating plant of the Reichenhall Salt Works.

The Reichenhall installation owned by the Bayerische Berg-, Hütten- und Salzwerke A.-G., as mentioned above, comprises a vapour recompression

Digitized by Google

Digitized by Google

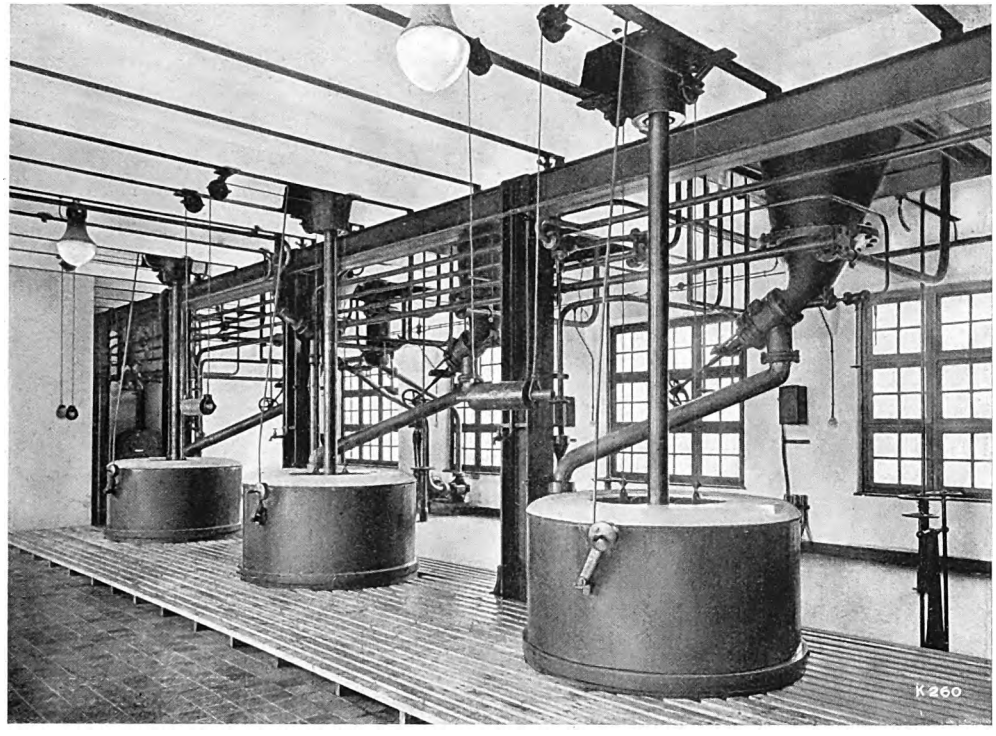

Fig. 9. Photograph of the first floor of the Reichenhall plant.

executed by Bavarian firms, who were entrusted to manufacture the components according to the workshop drawings supplied by Messrs. Escher Wyss & Co.

Diagram, Fig. 4, illustrates the general lay-out of the plant, omitting details. For the sake of simplicity and to avoid repetition, the diagram shows only one of the three evaporators. The vapours of the boiling salt solution in evaporator 1 are drawn off by the compressor 2. These vapours, before entering the compressor, pass through the washing towers 3 and through a liquor separator combined with the towers. The compressor compresses the vapors and delivers them to the heating chambers of the evaporators. Here the steam condenses and transfers its latent heat to the boiling solution. The condensate formed flows off to the preheaters 4. The discharge of the condensate is regulated by the steam trap 5 and the quantity of condensate measured by means of the device 6. Pump 7 supplies brine, the water of which has previously been softened, through the preheaters 4, where it is heated by the warm condensate flowing to the evaporator. The salt precipitated from the boiling brine is discharged through sluice 9 into the centrifugal 10. After being centrifuged, the salt is carried by means of conveyors to the drying department. The compressor 2 is driven with a spur gear 11 by a variable speed three-phase motor 12, which is directly coupled with the regulating motor 13. Low-pressure steam, led to the plant through pipeline 14, is used for heating up the installation and for the make-up steam required. The main control apparatus and measuring instruments, with exception of the electrical ones, are shown in the diagram. Practically all of these are located on the stand 8. The electrical switchgear is appropriately arranged on a separate switchboard near stand 8.

The lay-out of the plant, except for some special considerations relating to the salt production, was governed by the following general considerations:

Possibility of simple and appropriate switching of the different apparatus and machines with each other, if desired, with ample room between the various units to make the indispensable cleaning of the plant as easy as possible by arranging all parts to be readily accessible and to have good lighting in all the rooms.

Digitized by Google

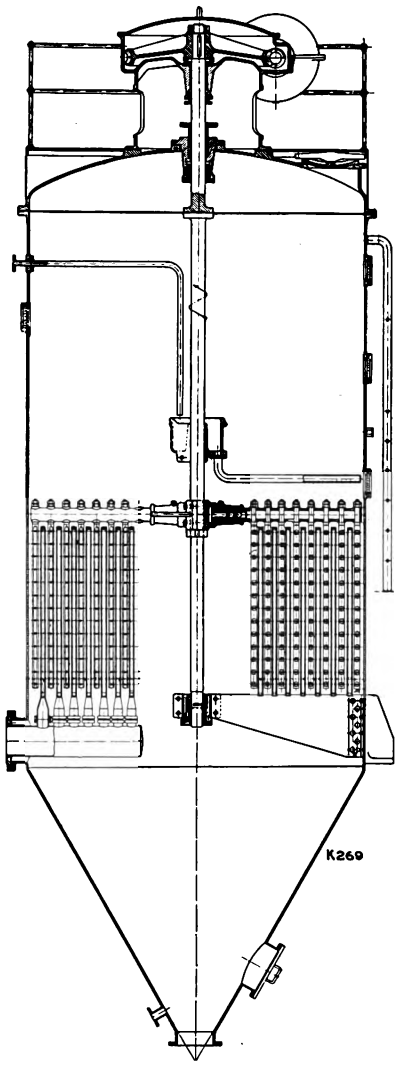

Fig. 10. Sectional elevation of an Autovapor evaporator.

Possibility of easy and centralized control. Utmost utilization of the hoisting machinery which was provided.

The plant in its final lay-out fully satisfies these requirements, as may be gathered from Figs. 5 and 6. The individual parts are mentioned in the explanatory notes accompanying these illustrations. It will be seen that the plant may be subdivided into two distinct groups, viz: the evaporating station and the salt delivery station, which are separated from each other in a desirable manner. The rough and damp service for the delivery of the salt is situated two floors lower than the vapour recompression plant, which latter resembles closely a power station. Figs. 7, 8 and 9 are photographs of the different floors, taken after the plant had been in continuous service for one year. We would emphasize the fact that the good state of preservation and the cleanliness of the plant seen in the photographs is not accidental, but is permanently maintained. This fact not only proves the appropriate and careful execution of the plant, but also the expert handling of same by the staff of the works management. The actual evaporating station is located in the fourth, third and part of the second floor. It comprises the evaporators, the motor-driven compressor and the auxiliary apparatus, such as preheaters, washing towers, etc. The supervision of this part of the plant may be mainly carried out from the third floor, where the control stand for the vapour recompression apparatus is also situated. The equipment for the delivery of the salt is arranged in the first and part of the second floor, and it embodies the discharge sluices, the centrifugals and the apparatus for operating this machinery. The attendance to this equipment is performed exclusively on the first floor. The conveyor for the centrifuged salt and the pumping plant for the fresh brine solution are situated on the ground floor.

The following remarks concerning the main parts of the plant may be of interest:

The design of the evaporators is well suited to their task of vapour recompression. This process

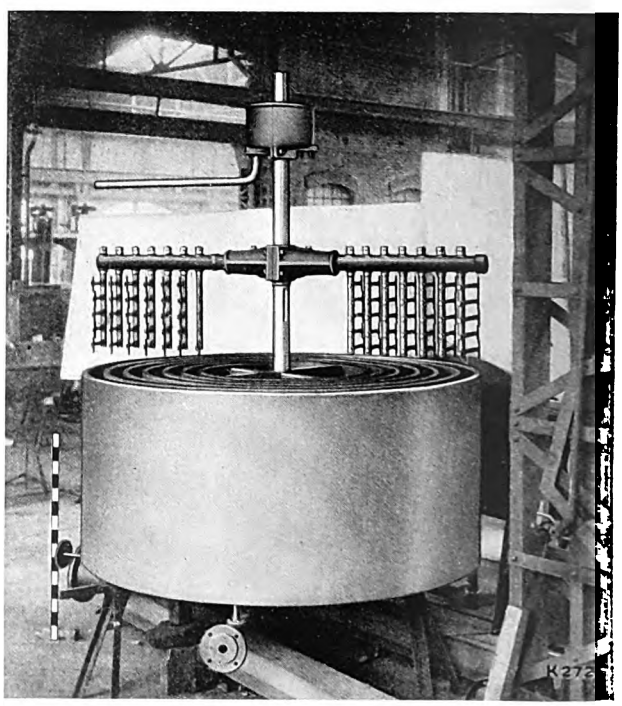

Fig. 11. Heating system with scrapers raised.

Digitized by Google

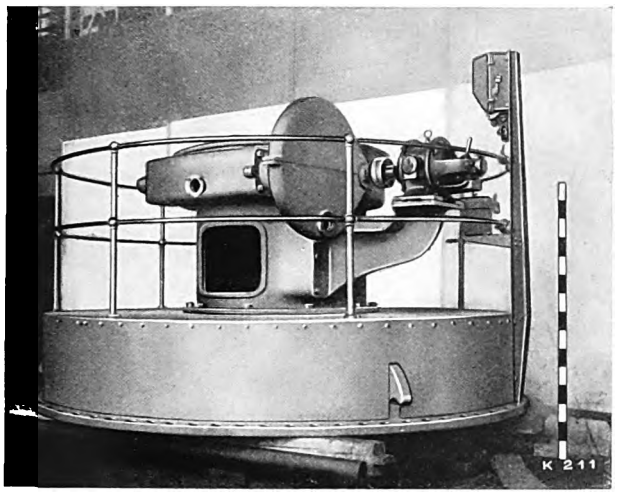

Fig. 12. Drive of the scraper mechanism.

requires apparatus, which not only operates advantageously from the point of view of evaporation, but above all it must operate uniformly. When evaporating the brine solution, incrustations are formed in a very short time on the heating surfaces of ordinary evaporators. The Autovapor apparatus provided by Messrs. Escher Wyss & Co. are not subject to this trouble as their heating surfaces are permanently kept free from incrustations by means of a mechanical scraping device. Fig. 10 is a sectional elevation of an evaporator and Fig. 11 a photograph of the heating system with the scrapers raised. Each evaporator is equipped with seven concentric ring-shaped heating elements. The rings are provided on their bottom sides with branches for connecting the steam, condensate and deaerating pipelines. It is, therefore, possible to keep the jacket surfaces of the rings, forming the heating surfaces, permanently free from incrustations by means of the scrapers situated between the rings. The scraping device of each evaporator is actuated by an electrically driven gear fixed on the cover of the apparatus, see Fig. 12. Numerous evaporators of this type are in successful operation, some for several years.[4]) A very robust and improved design was adopted for the Reichenhall plant, which gave complete satisfaction from the time it was put into service. The replacements of scraper elements are limited to a few scrapers per year, and so far no heating rings have been replaced.

The motor-driven compressor, Fig. 13, is of special interest. The compressor of Escher Wyss design and manufacture runs at 5000 r. p. m., the electric motor of Siemens make at 1500 r. p. m. The motor speed is raised to that of the compressor by means of a Maag speed-increasing gear. The management of the salt works had stipulated that this set should run practically noiselessly owing to the proximity of the health resort Reichenhall. Doubts were expressed on this point especially as regard the speed-increasing gear. However, by careful choice in the form of the teeth and appropriately designing the gear casing it was possible to reduce the noise to such an extent that it is not audible outside the building. A further proof of the smooth running of the set is that the high-speed set driven by a 600 HP motor is situated on the third floor and has not given rise to the slightest trouble. The compressor is well adapted to the delivery and compression of steam especially as far as the shape, design and manufacture of the runner wheels, shaft and glands are concerned. The runner wheels are nickel-plated according to a patented process of Messrs. Escher Wyss & Co. The compressor is in addition protected against inhaling vapours having too high a salt con-

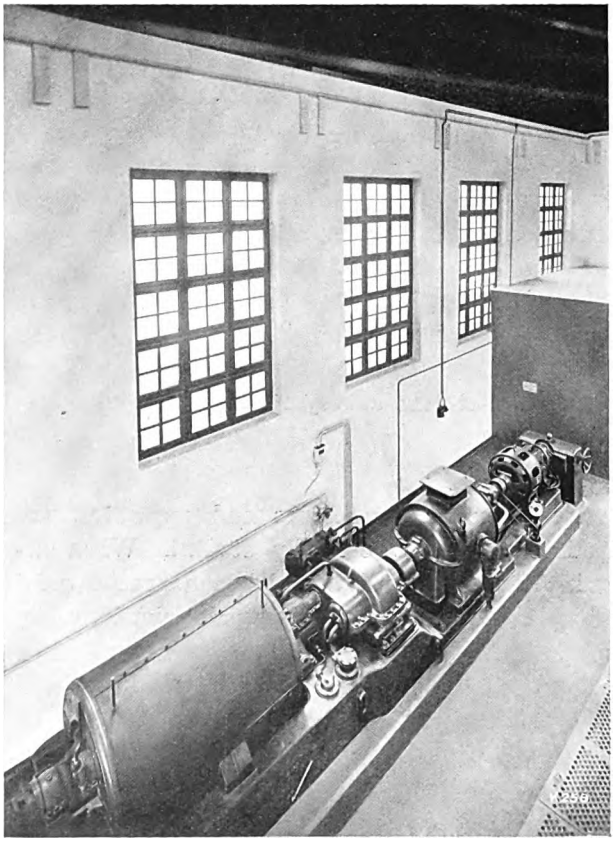

Fig. 13. Motor-driven compressor.

[4]) Regarding design refer also to article "Apparatus for concentrating waste sulphite liquor" in Escher Wyss News, No. 4/1928.

Digitized by Google

Fig. 14. Micro-photograph of the salt originally produced. Magnified 23 times.

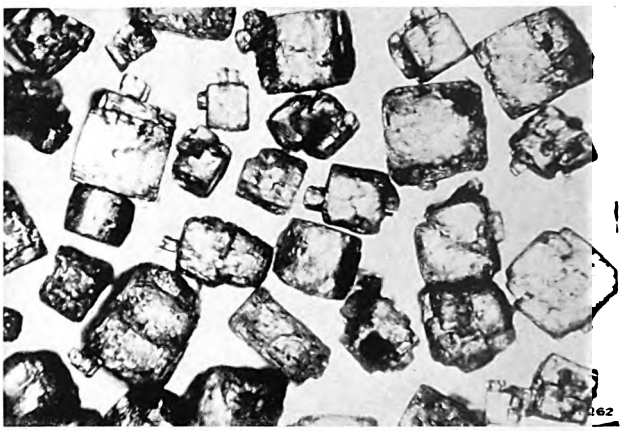

Fig. 15. Micro-photograph of the salt now produced. Magnified 23 times.

tent. In the preceeding washing towers, the steam is efficiently washed and then dried. As already mentioned, the salt is discharged through sluices. Whilst elaborating the plans of the plant, several methods of discharging were studied, and in view of the size of the plant and the special conditions prevailing, it was ultimately decided to adopt the sluice system. The experience since gained has fully justified this decision. The handling is very simple and practically no failures have occurred. The discharge of the salt is particularly unhampered by clogging with salt of pipelines and valves. This is due to the fact that each evaporator with its salt discharging outfit forms a complete unit. The attendance of the sluice and of the centrifugal of an evaporator can be performed from the same point. The centrifugals, supplied by the firm of Haubold, have vertical shafts and are directly coupled with the driving motors. The centrifugals are discharged downwards into the conveyors for the centrifuged salt.

Apart from the machines and apparatus, the pipelines were also carefully studied. When designing the lay-out of the piping, a special point was made of having the arrangement simple, easily supervised and easily accessible to all flange connections and fittings. This made it possible to avoid laying the pipelines in trenches and channels without offending the eye by unsightly pipe constructions. Figs. 5 to 9 bear testimony to this fact. Experience has since shown that the appropriate lay-out of the pipelines and the easy accessibility of the fittings very materially contributes to the excellent performance of the plant. In this connection it may be mentioned that the operation of the plant has never suffered from the pipelines being choked with salt. This is not due to the many provisions made for washing out, but to the fact that the apparatus and the system of interconnection adopted almost completely avoided the flow of hot saturated brine solutions.

The question of materials received special attention. Iron was chiefly used in its different qualities as mild steel, cast-iron or steel, and has proved to be suitable. The disadvantage, such as colouring of the salt or excessive formation of rust and corrosion is not noticed in continuous service if the methods of prevention are strictly observed. Other materials, such as copper, Monel metal, Krupp V II A steel, nickel and aluminium were employed in a limited degree for parts, which are permanently exposed to the simultaneous influence of moisture, salt and air. The durability of the materials is frequently dependent on conditions, which are easily overlooked. For instance, corrosion may be originated by insufficiently deaerating the brine. Furthermore, sharp bends or ridges due to careless welding of the pipelines may give rise to rapid destruction of the parts involved. The operation of the plant is simple, and may be comfortably performed by two to three operators, one looking after the evaporator station and the other one or two manipulating the salt discharge. The work of the former is mainly limited to attending to the machines, evaporators and auxiliary apparatus. The regulation of the vapour recompression is restricted to maintaining the suction

Digitized by Google

pressure by means of the make-up steam and to feeding the evaporators with brine solution. The central control stand with its instruments in conjunction with the electrical switchboard permits the performance of the plant being controlled at any time both as regard the output and heat economy, and the proper functioning of the machines, evaporators and auxiliary apparatus. The whole plant is started and stopped from this stand, and clear and centralized arrangement of the apparatus and instruments greatly facilitates the work. The operation in connection with the salt discharge embodies the discharge of the salt through the sluices, and the charging and discharging of the centrifugals.

The present operation of the plant is normally limited to two evaporators working with the compressor, inasmuch as it was ascertained that practically the same output can be secured with two apparatus, as was originally calculated for three evaporators. The compressor operates uninterruptedly for weeks at a time. The evaporators are disconnected in intervals of from 7 to 12 days in order to discharge the accumulated liquor.

The approximated mean data for the annual service may be taken as follows:

Evaporating capacity	12 320 lbs/hr.
Salt production (with non-saturated brine)	2750 lbs/hr.
Gross power consumption (compressor and auxiliaries, current measured at the busbars)	470 kW [5])
Quantity of make-up steam generated in a small steam boiler (excluding heating up of plant when starting)	705 lbs/hr.

Exact calculations have proved that the steam consumption can be reduced in new plants.

According to the above values, 26 lbs. of water are evaporated and about 6 lbs. of salt produced for each kW/hr. These figures, as shown from experience gained in new plants, may be raised to 33 lbs. of water and 10 lbs. of salt, by reducing the losses and especially by a considerable diminution of the power consumption of the auxiliaries and by utilising concentrated brine solutions.

The small consumption of make-up steam is remarkable. This result was obtained by the provision of excellent brine preheaters, the minute steam losses in the deaeration of the heating apparatus and the glands of the compressor, and finally by the very efficient heat insulation of the apparatus and pipelines.

As regards the quality of salt produced, the plant operates very satisfactorily. By certain measures adopted by the works management it was able to produce a relatively coarse grained salt. The microphotographs, Figs. 14 and 15, illustrate the salt originally produced and produced today magnified 23 times. The latter distinguishes itself by the uniform well-developed crystals. The salt is easily centrifuged, transported and dried. It has little tendency to cake together, i. e. to form lumps, and may be considered as an excellent quality of evaporator salt.

Summing up, it may be said that the evaporator plant during its two years' service has fully satisfied all requirements with regard to the complete lay-out, construction of the apparatus and machines, choice of the materials, power and heat consumption, attendance, and quality of salt produced. An important addition to the lay-out of modern salt works has thus been created. Certainly vapour recompression plants for salt production were also formerly built, but, they operated very uneconomically and were not suited for large capacities and combined service.

In conclusion we publish a more elaborate diagram, Fig. 17, of a salt works plant planned according to the diagram, Fig. 1. The salt works in question is just now in course of construction, Messrs. Escher Wyss & Co. being the main contractors. The explanatory note at the foot of the illustration gives all necessary information. The diagram has been greatly simplified by omitting the auxiliaries and connections as well as the electrical

[5]) Without auxiliaries, i. e. power consumption of compressor alone 350 KW.

Digitized by Google

apparatus and wiring to make the diagram more clear. It gives a good idea of the scope of work Messrs. Escher Wyss & Co. are in a position to supply for salt works.

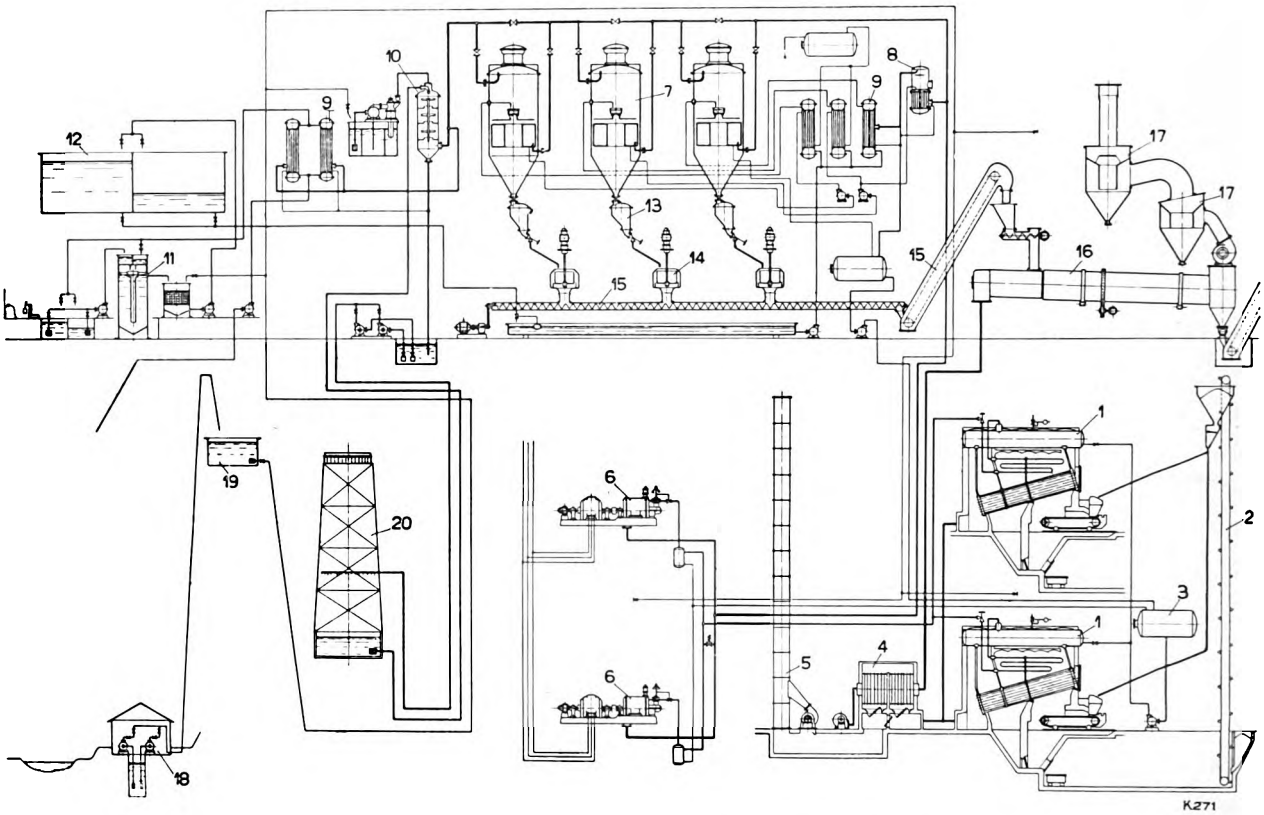

Fig. 16. Detailed diagram of a salt works plant now in course of construction according to Fig. 1.

1. Steam boiler
2. Coal elevator
3. Feed water reservoir
4. Air preheater
5. Steel chimney
6. Back-pressure steam turbines with three-phase generator
7. Evaporating apparatus
8. Make-up feed water preparation apparatus
9. Brine preheater
10. Condensing plant with vacuum air pump
11. Brine purifying plant
12. Pure brine reservoir
13. Salt sluice
14. Centrifugals
15. Salt conveyors
16. Drying cylinder
17. Cyclone
18. Pumping plant for water supply
19. Elevated reservoir
20. Cooling tower

Digitized by Google

Apparatus for treating fish offal.

By W. Steinmann.

The treatment of fish offal for recovering fish meal, which is an excellent food for pigs and poultry, has made rapid strides within the last few years. The demand for such fish meal food-stuffs having a small fat content is almost unlimited. Yet, in spite of the high prices fetched by fish meal, only a fraction of the available fish offal can be treated for the recovery of meal. The reason for this paradoxical condition is that suitable apparatus is wanting, which at low initial costs, simple handling and small space requirements can efficiently treat even small quantities of fish offal. In addition it is always stipulated that the treatment of such offal shall not be a nuisance to the neigbourhood.

Messrs. Escher Wyss & Co. during the last few years have succeeded in constructing fish utilizing apparatus, which fully satisfy the above requirements. The apparatus consists of a drying cylinder with vacuum pump and built-in condenser, plus a motor or steam engine for driving purposes. Fish offal is thrown into the drying apparatus and there dried to meal. After expiration of a definite period of time, the drying apparatus is opened and the perfectly dry and finely ground meal is automatically discharged. The principal part of the machinery is naturally the drying apparatus, Fig. 1, which in a very short time disintegrates and dries the fish offal. Thus, for instance, the time required for drying the contents of an apparatus of 1.5 tons capacity is only 3¼ hours. Burning of the material, which is very sensitive in this respect, whilst drying is impossible, and a very light fish meal of faint and agreable odour is obtained. The analysis of such a meal confirms a digestibility of the raw proteine of 96 per cent. As decomposition of the albumen is avoided by quick drying, the formation of objec-

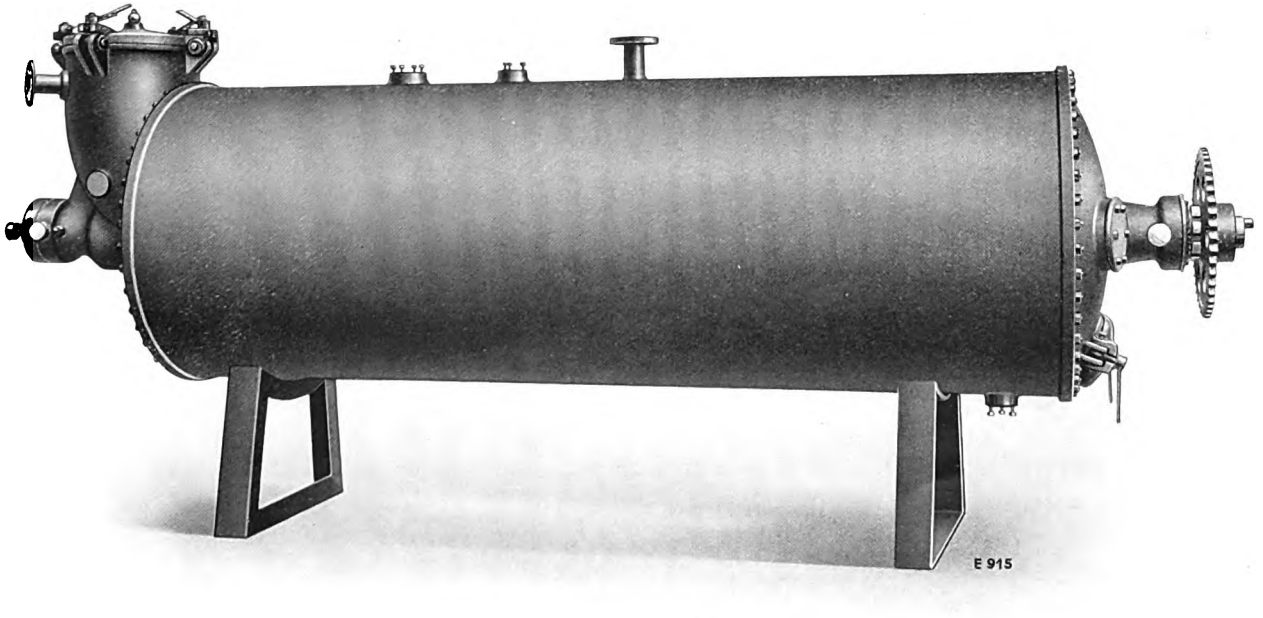

Fig. 1. Apparatus for the treatment of fish offal.

Digitized by Google

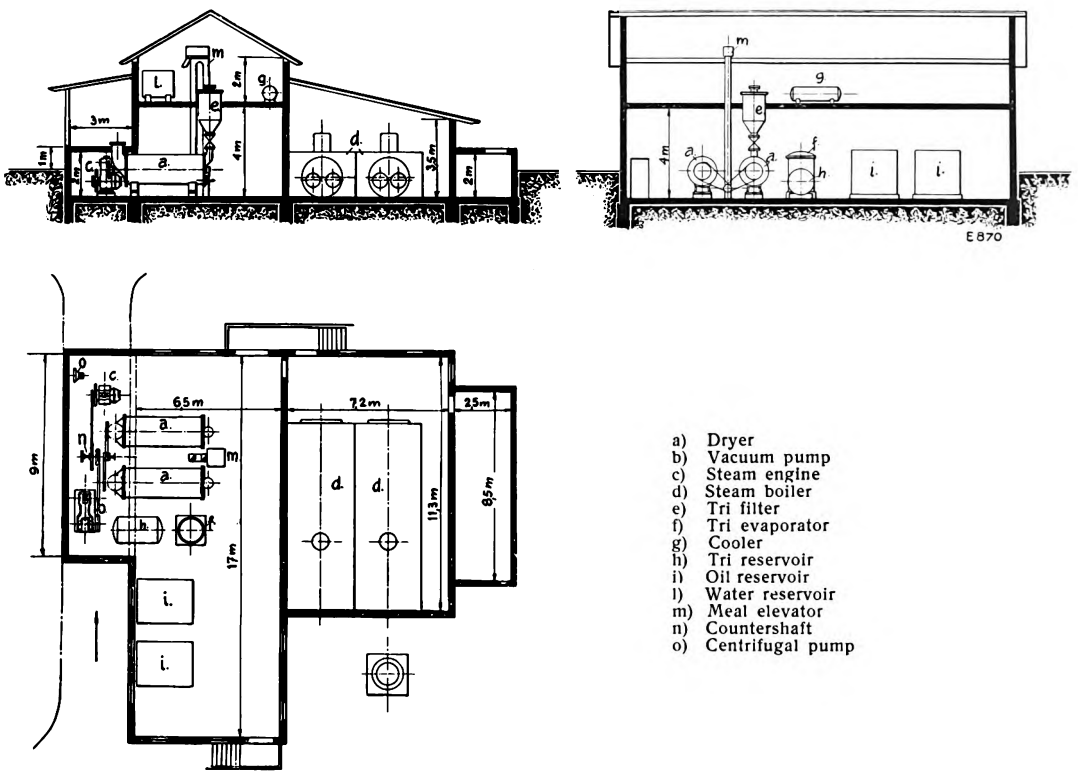

Fig. 2.

tionable odours is restricted to a minimum. The vapours generated whilst drying are sucked off by the vacuum pump and condensed in the condenser and in this manner it is possible to treat fish offal without causing a nuisance. Messrs. Escher Wyss & Co. have, for instance, erected such a plant in La Rochelle (France) directly in a large fish market hall without providing partitions. This plant handles about 5 tons of fish offal daily without causing any inconvenience through disagreable odours to buyers and persons occupied in the hall.

The fish meal recovered in the drying apparatus when treating fish offal having a small fat content may be utilized direct as food for animals. If, on the other hand, offal containing much fat is treated, then a fish meal rich in fat is obtained, which cannot be used directly as fodder but must first of all have the fat extracted by a solvent. Fig. 2 illustrates a plant for handling 6 tons of fish offal in 5 hours including the auxiliary apparatus for extracting the fat from the meal. This auxiliary apparatus consists of an extractor e, which is filled with the dried meal and in which the fat is extracted from the meal. After the completion of the extraction process the fish meal, which has become saturated by the solvent, is discharged into the drying chamber a where the remaining solvent is evaporated. The vapours released are condensed in a condenser and recovered. The auxiliary apparatus for extracting the fat from the fish meal is combined with the drying apparatus. The solvent which has been employed and which contains the fat, is conveyed to the evaporator f where it is evaporated and then condensed in the condenser g and finally recovered.

The oil remaining in the condenser is discharged to the oil reservoirs i. As solvent our firm employs trichlorethylene, which has the advantage of not being inflammable nor explosive and which can be easily and completely recovered from the fish meal.

Fig. 3 illustrates the arrangement of such apparatus on board a fishing steamer. On these steamers there is naturally an abundance of fish offal, which may be profitably utilized in Messrs. Escher Wyss & Co.'s apparatus. As about 2½ d. per lb. is paid for fish meal and the fish offal yields on an average 25 per cent of meal, a gross profit of about ¾ d. per lb. is made. Under these conditions it is only natural that the utilization of fish offal

Digitized by Google

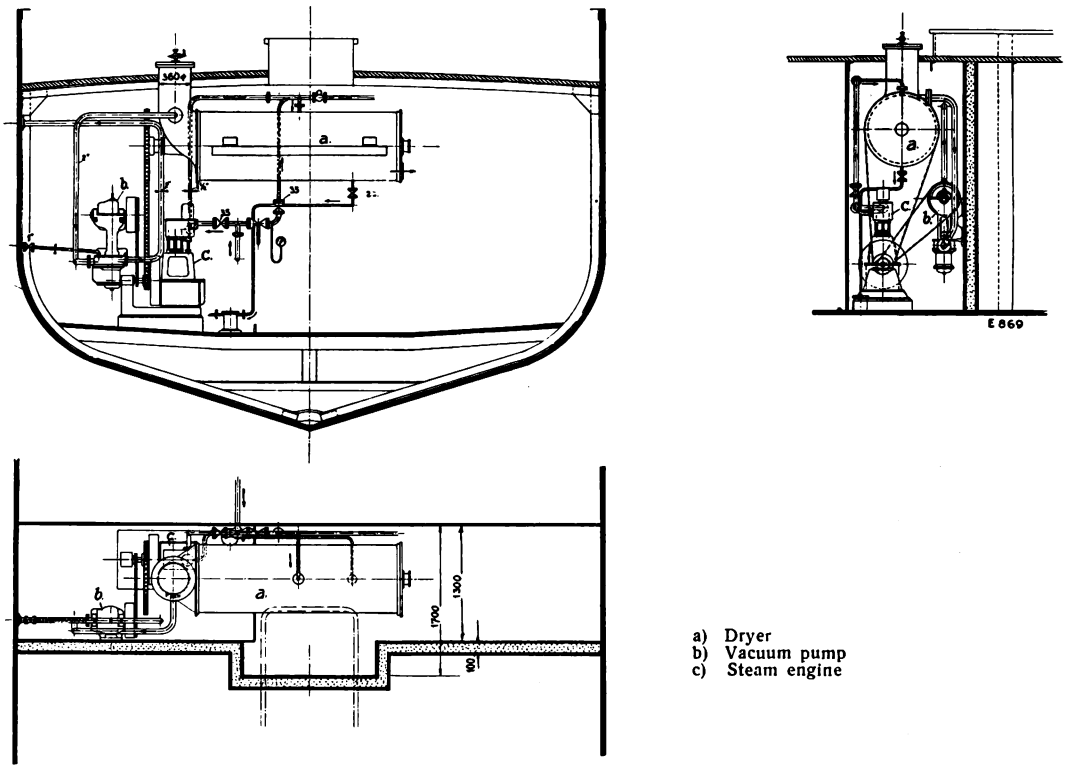

a) Dryer
b) Vacuum pump
c) Steam engine

Fig. 3.

on board ship is being taken up with all possible zeal. The space required for the apparatus is secured by providing an insulated partition fixed transversely in the ship, as shown in Fig. 3. The hopper of the drying apparatus protrudes beyond the deck where the offal is thrown into the apparatus. The handling of the latter is extremely simple and is restricted to starting the steam engine and opening the discharge when the drying process is terminated, and, therefore, a special attendant is not required. The steam consumption being extremely low, amounting to only about 1 lb. of steam per 1 lb. of raw material treated, and the offal costing nothing on board, the installation of our apparatus is certainly a very paying proposition.

In smaller ships, the space taken up by the partition is too valuable and the apparatus is, therefore, erected immediately over the steam boiler. In this case, however, the air pump must be dispensed with.

Messrs. Escher Wyss & Co. have installed quite a number of such plants during the last few years. Due to their extreme simplicity and reliability the apparatus have found much favour with trawler owners and we hope they will increasingly interest also other circles.

Digitized by Google

The crowning of couch press and wet press rolls.

By Otto Jung.

The paper maker experiences no end of annoyance and trouble with unevenly ground couch press and wet press rolls. Many a complaint of the buyers and of firms utilizing paper may be traced to press rolls having faulty surfaces.

The efforts of the machinist to eliminate the wet centre portion of the paper sheet, or the wet edge of the front or back side are well known. Sometimes even both edges are wet simultaneously. It is frequently alarming the equanimity with which weights of all descriptions, shapes and sizes are tied to the levers with the object of obtaining a web uniformly dried throughout the whole width. The opinion of the machinist that the wet centre portion or the wet edges of the paper are due to faulty rolls is not always correct. In many cases the rubber rolls have been taken out of the machine and expensive rubber ground away without, however, eliminating the trouble of the wet stripes in the paper. It is the duty of each mill engineer and his workshop staff before regrinding a couch roll or a press roll to carefully investigate all other factors, which cause the production of a faulty web. Very frequently the causes are to be found in quite a different quarter, as a set of rolls ground together and correctly handled should do their duties for years without having to be reground. The relative positions of couch press and wet press rolls, which for many reasons may not run true and parallel, should especially be controlled.

Years ago the author was entrusted with the task of investigating a second wet press, which had been erected a few months in a paper mill, and which in spite of all endeavours produced wet edges even after the rolls had been reground several times. Measurements proved that the upper stone roll had moved its position to such a degree that its axis intersected the axis of the lower roll. Fortunately the two rolls were independently supported so that the error could be rectified in a short time. After the rubber roll, which in ignorance of the real cause of the trouble had been ground hollow in its centre part, was correspondingly crowned, the wet edges completely disappeared. The careless assembly of the upper roll had cost the lower roll half its rubber lining.

In another mill the author's attention was drawn to a reversing press, which on the attendant's side was weighted with all available weights and objects, whilst the driving side required no weights whatever. The complaints of the machinist were naturally directed against the rubber roll, which had already been several times reground in the machine without, however, alleviating the trouble. The front edge of the paper sheet still remained wet, and after each time that the machine was shut down a deterioration was noticeable. The investigation confirmed the author's surmise that the two rolls were not exactly parallel to each other. As a matter of fact, the upper roll lay at an angle to the machine axis. It appeared that the bearing on the driving end of the lower roll had become loose and the driving pinion had moved that side of the roll towards the upper roll. Without thinking of readjusting the lower roll, a mechanic simply tightened up the bearing so that the rolls were bound to touch each other on the driving end sooner than on the attendant's end. In this case the rubber roll had gradually been ground to a taper of 1.5 mm owing to the origin of the trouble not having been properly investigated. After the lower roll had been reset in its original position and the rubber lining crowned in the usual manner, the necessary pressure on both sides was uniform again. This fault, tackled in an incorrect manner, had cost the mill 3 mm of rubber, which had unnecessarily been ground off the roll, apart from the many vexations caused by the faulty functioning of the machine.

These two examples suffice to prove that if the couch press and wet press are properly erected and the rolls carefully ground, every inch of the whole width of the paper sheet must have the same

Digitized by Google

moisture content. If, in the course of time, unevenness of the rubber surface nevertheless sets in, then it is so minute that a few hours work on a Sunday suffice to regrind the roll. A check at short intervals should prevent excessive wear of the rubber roll and the necessity of taking it out to be reground on a special machine.

With newly equipped presses or newly erected machines it is taken for granted that all rolls are ground together to suit the service conditions and yet it is by no means an exceptional occurrence that one or the other of the rolls requires subsequent crowning. The data, which the designer gives to the workshops regarding the grinding of the rolls, are mostly based on former similar designs and it is a mere chance if his instructions really hit the nail on the head. Lacking a standard rule for crowning a roll of a given length and diameter, we will in the following publish a method, the reliability of which has been repeatedly verified in practice.

Firstly, we must make a point of having all upper rolls truly cylindrical and to leave the crowning to the lower rolls.

It is a natural law that every body firmly held or even only supported at its ends sags to a certain extent in its centre due to its own dead weight. Now, in order to counteract or at least to minimize this sagging, the surface of the lower roll is initially crowned.

Since the deflection of a cylindrical body with walls of known thickness may be accurately calculated, the necessary crowning of the roll may also be determined with sufficient accuracy.

As proof of this assertion we publish the following example. All values are given in the metric system. We will assume a lower wet press roll with rubber lining of the dimensions shown in Fig. 1. The thickness of the rubber lining is of no importance for the deflection and may, therefore, be neglected.

Weight of the lower roll	2000 kilos
Weight of the upper roll with scrapers and bearings	2000 kilos
Pressure 30 kg per cm = 30×252.5 .	7575 kilos
Total weight of lower roll	9575 kilos
Weight in round figures for the calculation	10 000 kilos

$$Mb = \frac{P \times l}{8} = \frac{10000 \times 252.5}{8} = 315\,625 \text{ cmkg}$$

$$J = \frac{\pi}{64} \times (D^4 - d^4) = \frac{3.14}{64} \times (41^4 - 26^4) =$$

$$0.049 \times (2\,825\,761 - 456\,976) = 116\,070 \text{ cm}^4$$

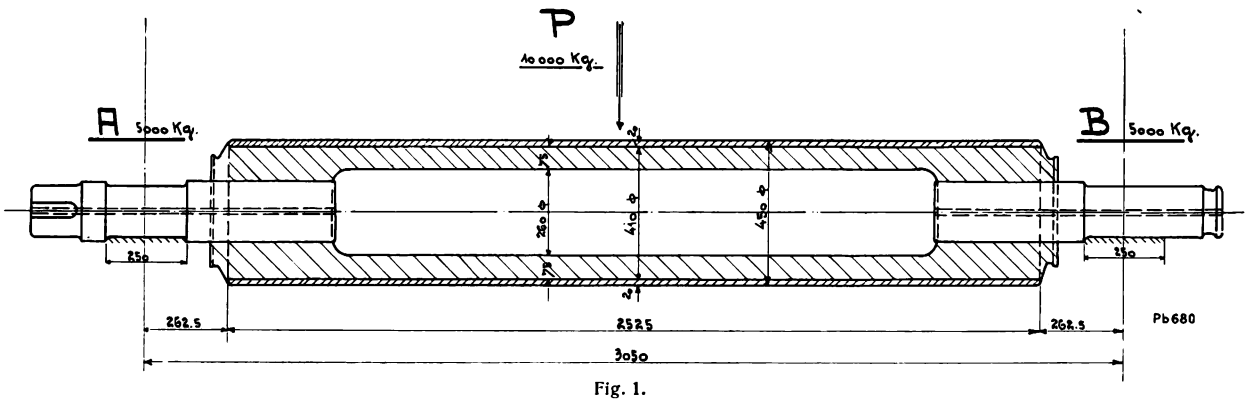

Fig. 1.

$$f = \frac{P \times 5 \times l^3}{384 \times E \times J} = \frac{10000 \times 5 \times 16098453}{384 \times 116070 \times 900000} = 0.02 \text{ cm.}$$

Thus a calculated deflection of 0.2 mm has to be taken into account for this roll.

Due to the pressure exercised by the upper press roll on the lower press roll, for the case in point 30 kg per centimeter length of the roll, the upper roll has also a natural tendency to deflect to one side, and as a matter of fact the deflection takes place upwards. Now, if in a wet press both rolls were ground exactly cylindrically, their contact with each other at full load would be of the order shown in Fig. 2.

We need not take into account that with a calculation of the deflection of the upper roll in the opposite direction the dead weight of the roll must be subtracted, for if the roll is made of cast-iron, the thickness of the walls is smaller than that of the lower roll. If, on the other hand, the roll is of stone, the deflection of the steel shaft at full load ap-

Digitized by Google

proaches the calculated deflection of the lower roll. Therefore, it is quite permissible to accept the deflection of the lower roll as being equal to that of the upper roll and our example then results in a total deflection of 0.4 mm. between the two cylindrically ground rolls, as shown in Fig. 2. Referred to the circumference, we would, therefore, have to specify a crowning of 1.25 mm for the roll sketched in our example.

If, in addition, we take the jacket of the couch press and the rubber lining and wet felt of the wet presses into account, which through yielding produce

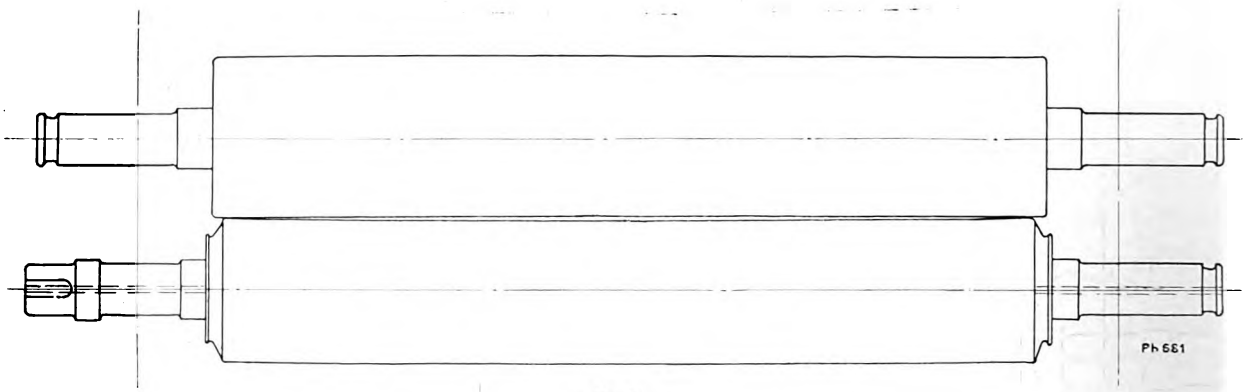

Fig. 2.

a certain compensation, then in our example a crowning of from 1.25 to 1.50 mm in the circumference results.

Although the first press requires a soft rubber lining and little pressure, and the last press a harder rubber lining and greater pressure, yet the crowning of all rolls, assuming equal dimensions, should be fixed at 1.25 to 1.50 mm, as the excess in the first press will be compensated by the deficiency of the last press.

If the machine is also equipped with a feltless offset press, the rolls of which should with a view to restricting the number of spare parts, have the same dimensions as the press rolls, then its rolls should also have the same crowning, as contrary to the first press, the soft rubber and greater pressure here compensate each other.

The above calculation on deflections also proves the importance of choosing sufficiently large roller diameters for paper machines which have to produce a variety of paper qualities. The different kinds of paper, especially fine papers, require different degrees of pressure. Since the pressure forms the chief component of the total load, the influence of the pressure is an important item affecting the deflection. If the diameter of the rolls is too small, it may happen that the press acts more at the edges or more in the middle owing to the different degree of deflection from the differing pressures. This is especially noticeable in smoothing presses in which cast-iron runs on cast-iron and the compensating influence of the rubber is wanting. Here also the greatest differences in the pressing are encountered.

Finally it is very important to maintain a uniform hardness of the rubber lining in wet presses. Special apparatus have been designed which permit the engineering works and paper makers to test the hardness at any time.

Publishers: Escher Wyss & Co., Zurich (Switzerland).
Printed by: Siegfried & Co., Zurich (Switzerland).
London Office: Escher Wyss & Co., 20 Grosvenor Gardens, Westminster, London S. W. 1.
Tokyo Office: Escher Wyss & Co., Marunouchi Building, Room 322, Tokyo.

Digitized by Google

Ja 8

ESCHER WYSS NEWS

Volume II

6

Nov.-Dec. 1929

Published by Escher Wyss & Co. S. A.

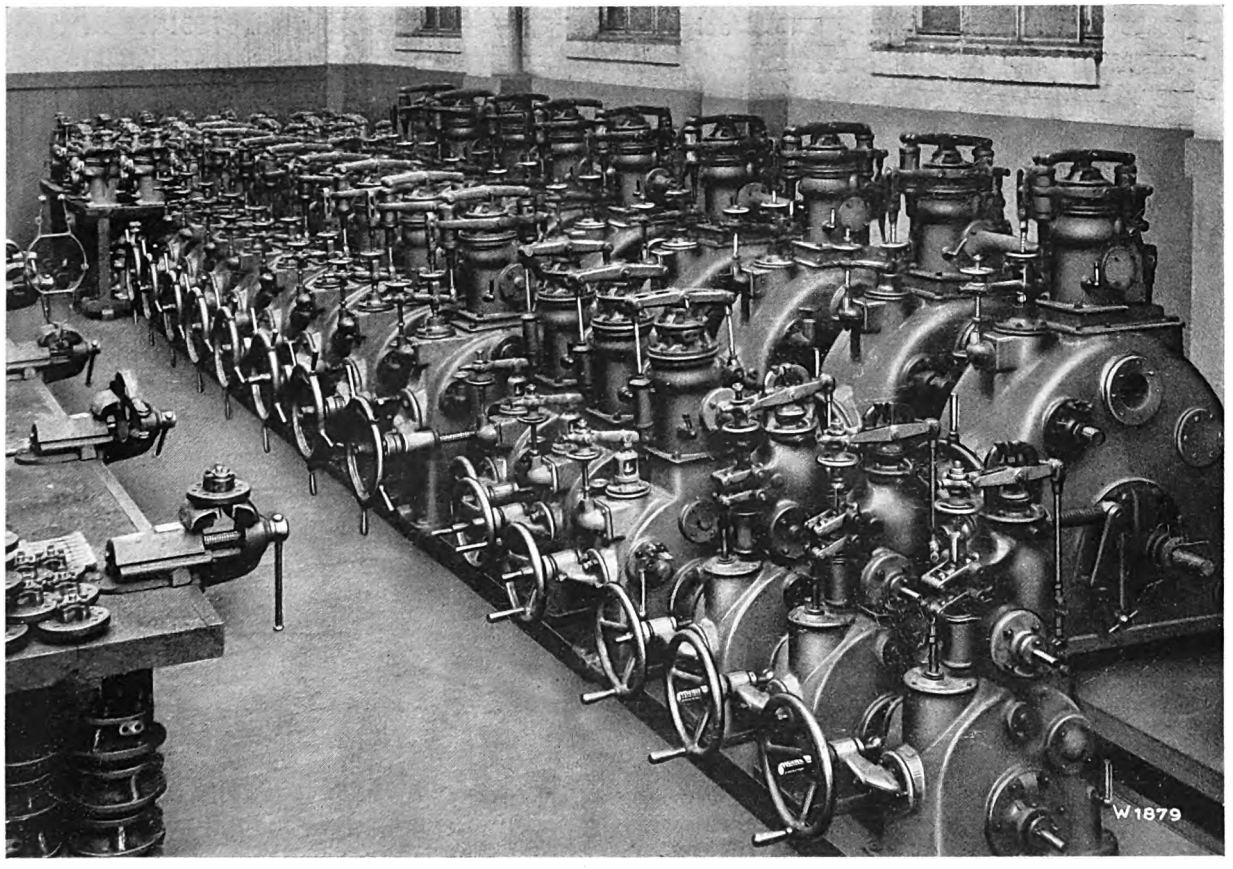

GOVERNOR NUMBER

Contents

	Page
1. Governor guarantees	195
2. The development and the performance of modern Escher Wyss & Co. turbine governors	203
3. The governors of the Eguzon plant	215
4. Modernizing old governors by adopting new actuators	217
5. The control, adjustment and trial runs of universal oil-pressure governors on the test bed	221

AGENTS FOR UNITED STATES
THE NATIONAL POWER MACHINERY CORP.
912 CHANIN BLDG., NEW YORK
Digitized by Google

Up to the end of November 1929 Messrs. Escher Wyss & Co. received orders for and executed:

Water turbines:

4909	Francis turbines having a total output of	4 940 399 HP
3285	Pelton turbines having a total output of	2 414 202 HP
58	Propeller turbines having a total output of	47 667 HP
73	Kaplan turbines having a total output of	149 026 HP

Total:

8325	Water turbines having a total output of	7 551 294 HP

Our new governor actuators, type 25.

Lately quite a number of large installations have been equipped with our new actuator, type 25, which was fitted to existing old turbine governors by way of experiment. In all cases considerable advantages were derived therefrom for the operation of the plant and consequently orders for numerous actuators were received. The following list contains some of the more important installations concerned:

Laufenburg Power Station	10	actuators
Basle Electricity Works for the Augst Station	10	»
Olten-Aarburg Electricity Works for the Gösgen Station	6	»
Oberweser Power Station (Prussia) for the Main Power Works	6	»
Munich Electricity Works for the Southern Power Station	3	»
Jungfrau Railway Co., Zurich, for the Burglauenen Station	4	»
St. Galle-Appenzell Power Station for the Kubel Works	3	»
Berne Electricity Works for the Felsenau Station	2	»

The new acuators may be fitted to any type of governor formerly supplied by us.

Digitized by Google

ESCHER WYSS NEWS

PUBLISHED BY MESSRS. ESCHER WYSS & Co. S. A.

VOLUME 2 — No. 6 — NOV.-DEC. 1929

The "Escher Wyss News" will be published periodically in bi-monthly issues. Reprinting of articles or illustrations appearing therein will only be permitted when source thereof is duly acknowledged. Single numbers 1/6; one year's subscription 7/6.

Governor guarantees.

By Dr. E. Jaquet.

Contrary to steam turbines and electric generators, it is customary with water turbines to give governor guarantees in addition to the usual guarantees for output and efficiency. These guarantees embody values regarding the temporary speed fluctuations at varying loads. These fluctuations are mostly given for the sudden switching off of full load, half load and quarter load in per cent referred to the steady conditions before or after the governing manœuvre.

The purpose of this article is to investigate the basis upon which the governor guarantees depend and to determine their values when using an Escher Wyss governor.

Regarding the governing problem in general, we refer to the fundamental investigations of Stodola [1]) and the book written by Bauersfeld [2]). The stability problem has been dealt with by a remarkable study of Fabritz [3]).

The problem we are confronted with cannot be solved in general in the present article so we must restrict ourselves to certain simplifications. We will only deal with Francis turbines, in which the pressure variation before the turbine during the governing manœuvre may be neglected, i. e. open turbines and pipeline turbines with sufficiently large pressure regulators [4]). This limitation affects the problem quantitatively but not in principle.

Long draught tubes also produce a variation in the pressure during the governing period and must, therefore, be considered as pipelines.

[1]) A. Stodola: „Ueber die Regelung der Turbinen", Schweiz. Bauzeitung, Vol. XXII. 1893 and Vol. XXIII. 1894.

[2]) W. Bauersfeld: „Die automatische Regulierung der Turbinen". Springer 1905.

[3]) G. Fabritz, Graz: „Die Wasserwirtschaft", Vol. 21, 1928.

[4]) Ueber den Einfluss der Rohrleitung auf den Regulliervorgang, see E. Braun, Stuttgart in „Wasserkraft und Wasserwirtschaft" 1927, Number 22 and Stodola l. c.

I. Descriptive Part.

The constructional details of the Escher Wyss governor are discussed in length by the present number of "Escher Wyss News", so that we may confine ourselves to the most important parts and to study their performance by the aid of the diagrammatic sketch, Fig. 1.

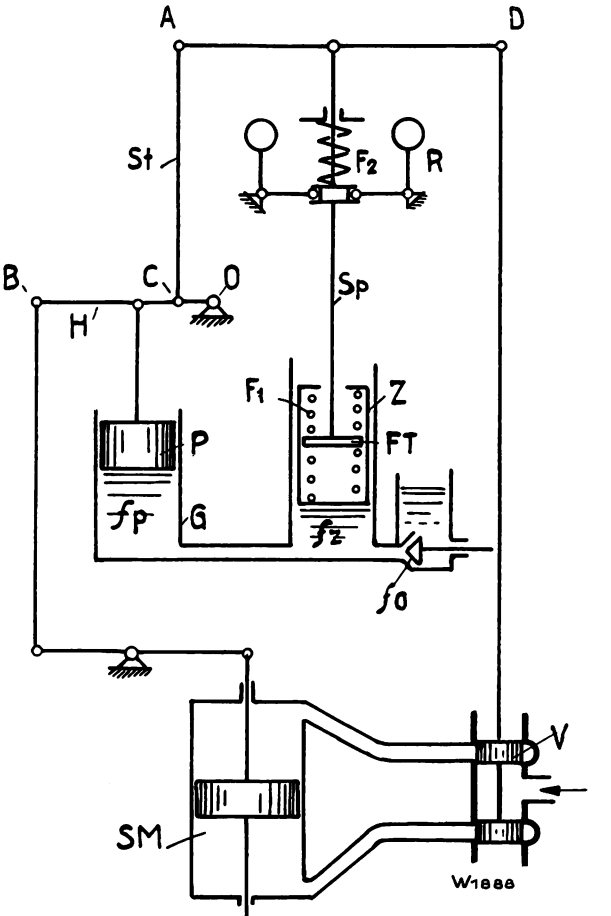

Fig. 1. Diagrammatic sketch of an Escher Wyss governor. The arrow indicates the closing direction.

Digitized by Google

With a sudden decrease in load, the governor spindle Sp will rise and the spring plate FT will compress the spring F_1, which is much weaker than the governor spring F_2. As A must preliminarily be considered a fixed point, the control valve V ascends and influences the Servomotor SM in such a manner as to close. Consequently point B and the pump piston P linked to lever H rise.

Rod St is linked to point C of lever H and is a rigid relay for attaining a permanent cyclic irregularity of the governing mechanism. By moving point C, this cyclic irregularity may be adjusted at discretion. When C coincides with the fulcrum O, we have the case of isodrome governing.

As casing G is completely filled with oil, when the pump piston P rises it sucks down cylinder Z whereby the spindle of the spring governor is drawn back, and in addition oil is drawn from the reservoir through the adjustable opening f_o. Under steady conditions the spring plate FT will take up a central tensionless position in cylinder Z.

We will now assume the following:

1. That the displacement of the servomotor be proportional to the variation of the torque of the turbine.

2. That the inertia of the governor be so small that it may be neglected.

3. That the displacement of the spindle be proportional to the speed variations.

4. That the quantity of oil flowing through the opening f_o in the unit of time is proportional to f_o and the difference of pressure p_o in the reservoir, and p in the casing G (Poiseuille's law).

The movement of the servomotor piston may be rendered approximately uniform by maintaining a sufficiently high oil pressure. With a long stroke, the periods of acceleration are less noticeable than with a short stroke. Consequently with heavy fluctuations of the load, governing with constant speed of the servomotor will be practically realized.

With small fluctuations of the load, the period of acceleration must be taken into account. We will assume that the speed of the servomotor be proportional to the displacement of the control valve from its central position. The duration of this period of acceleration will be discussed in the third part of our investigation.

II. The mathematical treatment of the problem (Based on metric system).

a) Governing with constant servomotor speed.

We will employ the following designations:

$\nu = \frac{\Delta n}{n}$ the relative deviation of the speed from the normal speed n,

m = distance of servomotor from one of the end positions,

m_{max} = maximum displacement from one end position to the other corresponding to full-load and no-load of the turbine,

$\mu = \frac{m}{m_{max}}$ the relative position of the servomotor,

T_s = closing time of servomotor.

$T_a = \frac{\Theta \omega_m}{M_{max}}$ = starting time of turbine, whereby Θ is the moment of inertia of the masses of the rotating parts, ω_m the mean angular velocity and M_{max} the maximum torque of the turbine.

Expressed in the customary technical units:

$$T_a = G D^2 \times \frac{n^2}{N} \times \frac{1}{272000}$$

The fundamental equation characterizing the decrease of the load to no-load of a turbine of the moment M is:

$$\Theta \dot{\omega} = M \qquad \ldots\ldots\ldots\ldots 1)$$

The relative governing velocity according to the above definition is:

$$\dot{\mu} = \frac{1}{T_s} \qquad \ldots\ldots\ldots\ldots 2)$$

The position of the servomotor is determined by integration and is:

$$\mu = \mu_o - \frac{t}{T_s} \qquad \ldots\ldots\ldots\ldots 3)$$

if we designate by μ_o the initial position at the time $t = 0$ at the beginning of the governing manœuvre. With due regard to the assumption made concerning the relation between the position of the servomotor and the torque and inserting equation 3) in equation 1) and finally employing the starting time as defined above, we obtain the equation for the relative deviation of speed:

Digitized by Google

$$\nu = \mu_o \frac{t}{T_a} - \frac{1}{T_a T_s} \frac{t^2}{2} + \delta \mu_o \quad \ldots\ldots 4)$$

wherein δ designates the permanent cyclic irregularity of the governing mechanism. For our investigation, the value of the permanent cyclic irregularity is in principle of no importance, as the maximum speed deviation referred to the steady conditions before the governing operation only slightly depends on δ. We may, therefore, just as well investigate a case of isodrome governing.

The maximum rise of speed at the time $t = t_1$ may be calculated from equation 4) by differentiation:

$$\dot{\nu} = \frac{\mu_o}{T_a} - \frac{1}{T_s T_a} \times t_1 = 0 \quad \ldots\ldots 5)$$

$$t_1 = \mu_o T_s \quad \ldots\ldots\ldots 6)$$

By insertion in equation 4) we obtain

$$\nu_{max} = \frac{1}{2} \mu_o^2 \times \frac{T_s}{T_a} \quad \ldots\ldots\ldots 7)$$

Remembering that $\mu_o = \frac{M_o}{M_{max}} = \frac{N_o}{N_{max}}$ and designating this proportion as the unloading and loading index, we find that at constant governing velocity the maximum speed variation is proportional to the square of the unloading index and the ratio of the closing time to the starting time. Table I gives us the numerical relationship for $\mu_o = 1$.

Table I.

$\tau_s = \frac{T_s}{T_a} =$	0.25	0.5	0.75
$\frac{GD^2 \times n^2}{N \times T_s} =$	1 088 000	544 000	362 500
$\nu_{max} =$	12.5 %	25 %	37.5 %
$\nu^*_{max} =$	8.5 %	21 %	33.5 %

ν_{max} is the maximum rise of speed referred to the conditions before governing, whilst ν^*_{max} refers to the conditions after governing and assuming a cyclic irregularity of 4 %. With a large decrease of the load, for which the acceleration time of the servomotor is comparatively small, the indicated theoretical values are not exceeded. When switching off one half or one quarter of the load, the maximum speed rise should be $^1/_4$ or $^1/_{16}$ of the values of ν_{max} given in the table. In reality they are higher owing to the period of acceleration, which can no longer be neglected.

b) Governing with variable servomotor speed.

In the preceeding chapter we could refrain from dealing with the special design of the governor, but now we must exactly analyse the movements of the individual parts.

We will designate the momentary deviations from the central position

of the governing spindle by y,
of the dash pot by z,
of the control valve by s.

The deviations corresponding to the maximum stroke m_{max} of the servomotor will be designated by y_{max}, z_{max}, s_{max} and the deviations referred to them by $\eta = y/y_{max}$, $\zeta = z/z_{max}$, $\sigma = s/s_{max}$.

f_p = area of the pump piston,
f_z = area of the damping piston,
f_o = adjustable damping opening,
c = oil velocity in the opening f_o,
β = the kinematic transmission ratio between servomotor and pump piston.

a) Equation of the hydraulic compensating device.

From the equation of continuity applied to the oil content of the casing we obtain:

$$\beta \times f_p \times \dot{m} - f_z \times \dot{z} - f_o \times c = o \quad \ldots\ldots 8)$$

The damping opening in reality consists of capillary tubes, which are opened in a greater or lesser number for the flow of the oil. The velocity c may, therefore, according to Poiseuille's Law be taken as proportional to the difference of pressure before and behind the bores.

$$c = k \times (p_o - p) \quad \ldots\ldots 9)$$

whereby p_o is the external pressure and p the pressure in the casing. The constant k depends on the viscosity and consequently also on the temperature of the oil. In Fig. 2, the hydraulic relay is shown in its central position and also in a position deviating from the central position.

The force $F_1 - f_z (p_o - p)$ acts on the cylinder Z so that

$$c = k \times \frac{F_1}{f_z} \quad \ldots\ldots\ldots 10)$$

The force of the spring F_1 is proportional to the displacement of the spring plate FT from its central position

$$F_1 = \alpha (z - y) \quad \ldots\ldots 11)$$

α is the constant of the springs enclosed in the cylinder. The velocity c, therefore, becomes

$$c = k \frac{\alpha}{f_z} (z - y) \quad \ldots\ldots\ldots 12)$$

Digitized by Google

When bore f_o is closed, the maximum cylinder stroke z_{max} corresponds to the maximum pump stroke

$$\beta \times m_{max} \times f_p = z_{max} \times fz \quad \ldots\ldots \quad 13)$$

or using the abbreviation $\beta' = \beta \frac{f}{f_z}$

$$\beta' \times m_{max} = z_{max} \quad \ldots\ldots\ldots \quad 14)$$

We will now introduce the term of isodrome time T_i, by which is meant the ideal time required by the cylinder to perform the stroke z_{max} under the action of the force of the spring $\alpha \times z_{max}$ when the pump piston is stationary. By assuming the

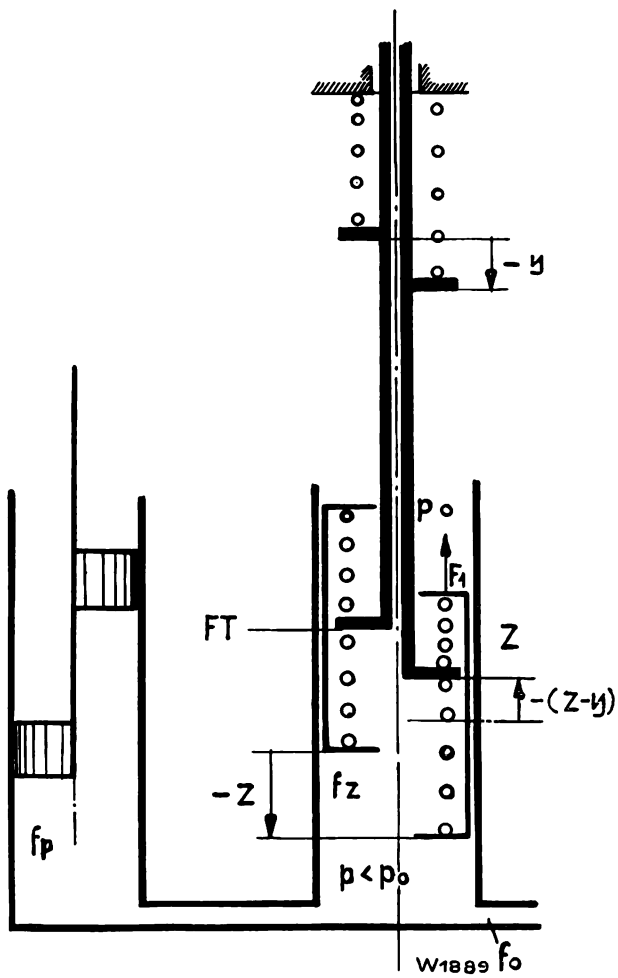

Fig. 2. Diagrammatic sketch of the hydraulic relay.

first term of equation 8) to equal zero and integrating over z from 0 to z_{max}, we obtain:

$$k \times \frac{f_o}{f_z^2} \times \alpha = \frac{1}{T_i} \quad \ldots\ldots \quad 15)$$

T_i is a measure for the damping of the system. $T_i = \infty$ i.e. $f_o = 0$, corresponds to a rigid relay without damping. Let a difference of speed of Δn_{max} correspond to the pendulum stroke $y_{max} = z_{max}$ and let us designate the cyclic irregularity of the pendulum with $\delta_P = \frac{\Delta n_{max}}{n}$.

Equation 8) then under due consideration of equations 14) and 15) assumes the relative form of the relay equation:

$$\dot{\mu} - \dot{\xi} + \frac{1}{T_i}(\eta - \zeta) = 0 \quad \ldots\ldots \quad 16)$$

b) The pendulum equation.

Let us to begin with assume the relay cylinder to be non-existent. For the free pendulum we then have

$$\nu_f = \delta_P \times \eta \quad \ldots\ldots\ldots\ldots \quad 17)$$

The relay cylinder exercises a displacing force on the spindle. This displacing force is equal to double the product of the relative speed variation and the static force of the spring box. As the stroke of the pendulum is relatively small, it suffices to assume a constant mean value S for the static force of the box.

We had determined the displacing force before by the aid of equation 11). In the case of Fig. 2 this force acts downwards. Therefore:

$$\alpha (y - z) = 2 \frac{J\omega}{\omega} \times S = 2 \nu^* S \quad \ldots\ldots \quad 18)$$

To maintain the pendulum in its central position, a speed increase ν^* would be necessary. The maximum displacement z_{max} of the relay piston corresponds to a maximum displacing force $\alpha \times z_{max}$. With the equation

$$\alpha \times z_{max} = 2 \times \delta_R \times S \quad \ldots\ldots \quad 19)$$

we will define the cyclic irregularity of the hydraulic relay. For the loaded pendulum we have:

$$\nu = \nu_f + \nu^* = \delta_P \times \eta + \delta_R (\eta - \zeta) \quad \ldots \quad 20)$$

c) The servomotor equation.

We will now assume that the servomotor speed be proportional to the deviation of the control valve from its central position.

$$\dot{m} = -k \times s \quad \ldots\ldots\ldots \quad 21)$$

Taking into account the fundamental equation for T_s: $\dot{m}_{max} = \frac{m_{max}}{T_s}$, the servomotor equation is:

$$\dot{\mu} = -\frac{\sigma}{T_s} \quad \ldots\ldots \quad 22)$$

d) The control gear equation.

The movement of the pendulum is associated with the control valve and the servomotor through the lever A D, Fig. 1, when the governing mechanism is adjusted for a permanent cyclic irregularity.

$$\sigma = \eta - \varepsilon (\mu_o - \mu) \quad \ldots\ldots \quad 23)$$

whereby ε is the kinematic transmission ratio of the maximum deviation of point A and the maxi-

Digitized by Google

mum stroke of the servomotor. For isodrome governing, which we will accept for the sake of simplicity, $\varepsilon = 0$.

e) The turbine equation.

From equation 1) and the fundamental equation for the starting time we obtain the relative form of the turbine equation:

$$T_a \times \dot{\nu} - \mu = 0 \quad \ldots \quad 24)$$

The five equations 16), 20), 22), 23) and 24) form a system of simultaneous linear differential equations. We now substitute the variable values $\nu, \mu, \eta, \zeta, \sigma$ by $\nu = K_\nu \times e^{\lambda t}$, $\mu = K_\mu \times e^{\lambda t}$ etc.[1]) with for the moment undefined exponent λ. In this form the system of differential equations becomes a system of ordinary linear equations. The determinant of the system, as is known, must disappear so that to determine λ we obtain the following characteristic equation, in which, to abbreviate, $\tau_s = T_s/T_a$, $\tau_i = T_i/T_a$:

$$\tau_i \tau_s (\delta_R + \delta_P) \times (T_a \times \lambda)^3 + \{\delta_R \tau_i + \delta_P \times \tau_s\} (T_a \lambda)^2 + \tau_i (T_a \lambda) + 1 = 0 \quad \ldots \quad 25)$$

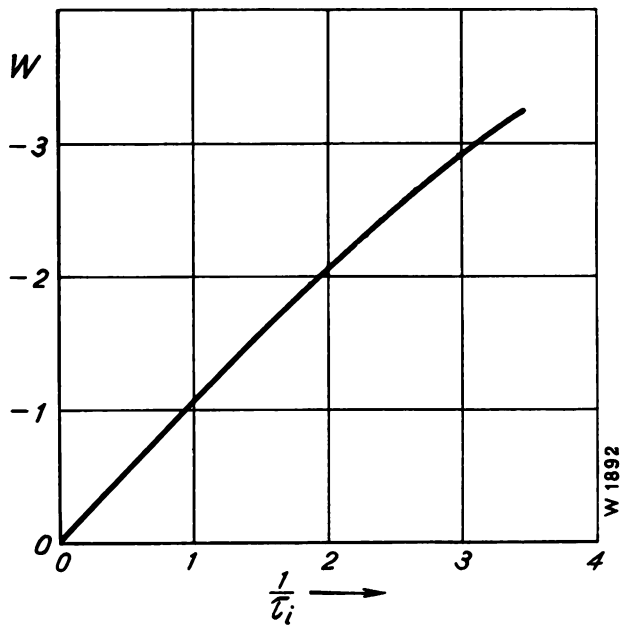

Fig. 3.

Discussion of the characteristic equation.[2])

Equation 25) may with the abbreviation $T_a \lambda = \xi$ be symbolically expressed as follows:

$$a\xi^3 + b \times \xi^2 + c\xi + 1 = 0 \quad \ldots \quad 26)$$

In order that $\nu(t)$ shall represent a damped oscillation, the real root and the real part of the complex roots of 26) must be negative. That is the case when all coefficients a, b, c are positive and $bc - a > 0$. As a condition for stability we, therefore, obtain:

$$\tau_i > \tau_s \quad \ldots \quad 27)$$

Let the three roots of 25) be:

$$\xi_1 = w \quad \xi_2 = r + si \quad \xi_3 = r - si \quad \ldots \quad 28)$$

The general solution for the speed variation with $\tau = \frac{t}{T_a}$, therefore, is:

$$\nu = C_1 e^{w\tau} + e^{r\tau}\{C_2 \text{cosine}(s\tau) + C_3 \text{sine}(s\tau)\} \quad 29)$$

The coefficients C may be determined from the initial conditions for $\tau = 0$

$$\nu_{t=0} = 0 \; ; \; \dot{\nu}_{t=0} = \frac{\mu_o}{T_a} \; ; \; \ddot{\nu}_{t=0} = 0 \quad \ldots \quad 30)$$

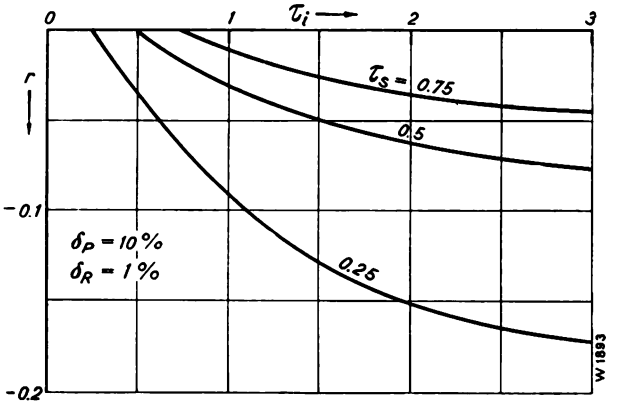

Fig. 4.

$$C_1 = -\mu_o \times \frac{2r}{(r-w)^2 + s^2} = -C_2$$

$$C_3 = \mu_o \times \frac{1 \times w^2 + s^2 - r^2}{s \times (r-w)^2 + s^2} \quad \ldots \quad 31)$$

The roots 28) are determined by the aid of the Cardan formulae. Fig. 3 illustrates the value of the real root as a function of $1/\tau_i$. Within the range of the practical values of τ_s and δ_R the value of w depends mainly on τ_i. Fig. 4 illustrates the real part of the complex root as a function of τ_i for three different values of τ_s at constant $\delta_P = 10\,\%$ and $\delta_R = 1\,\%$. Fig. 5 shows the real and imaginary part as a function of $1/\tau_s$. The full lines refer to a $\delta_R = 1\,\%$, the dotted lines to a $\delta_R = 2\,\%$ (harder spring). The real part r is dependent on the parameter τ_i, whilst the imaginary part s is independent thereof.

With powerful damping, i. e. $\tau_i > 1$, $|\xi|$ becomes < 1 and we obtain simple approximative values for the roots and constants C.

[1]) Compare Madelung. „Die math. Hilfsmittel des Physikers".
[2]) For pipeline turbines, the characteristic equation becomes of the fourth order with a further constant τ_r, which signifies a characteristic time for the pipeline.

Digitized by Google

$$
\left.
\begin{aligned}
w &= -\frac{1}{\tau_i} \\
r &= -\frac{1}{2} \times \frac{\delta_R}{\delta_R+\delta_P} \times \frac{\tau_i-\tau_s}{\tau_i\,\tau_s} \\
s &= \{\tau_s \times (\delta_R+\delta_P)\}^{-1/2} \\
C_1 &= \delta_R\,(1-\frac{\tau_s}{\tau_i}) \times \mu_o \\
C_3 &= \{\tau_s\,(\delta_R+\delta_P)\}^{1/2} \times \mu_o
\end{aligned}
\right\} \quad \ldots\ldots \quad 32)
$$

These approximated solutions, owing to their simplicity, are very suitable to qualitatively estimate the influence of the values τ_i, τ_s and δ_R.

By increasing the closing time, an increase of the maximum deflection and a settling down with greater oscillations results. By increasing the isodrome time, i. e. by reducing the bore f_o, the maximum deflection is not influenced very much, but the settling down acquires a more aperiodic form.

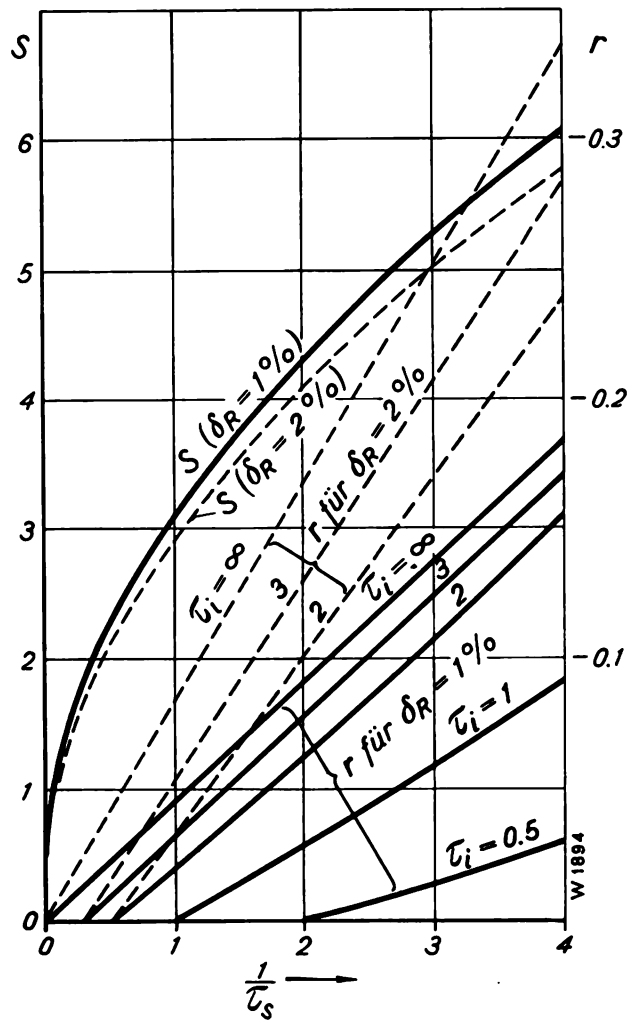

Fig. 5.

By increasing δ_R, i. e. by inserting a stronger spring in the dash pot, the maximum deflection increases somewhat and the following oscillations are more powerfully damped.

From equation 31) it follows that the maximum speed increase is proportional to the value of the relative decrease of load μ_o. The maximum increase is arrived at by ascertaining the time t_1 at which $\dot{\nu} = 0$. So long as the first term of 29) is much smaller than the third term, it may be assumed with a sufficient degree of accuracy that the deviation becomes a maximum when sine $(s\,\tau) = 1$.

Fig. 6 illustrates the maximum speed rise when switching off the full load for the special case of

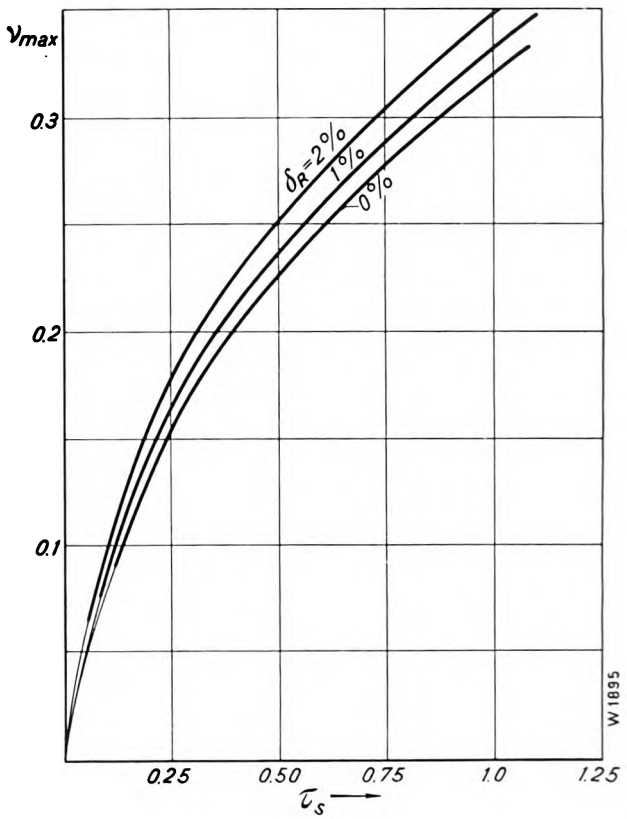

Fig. 6.

$\tau_i = 2$ and three different values of δ_R as a function of τ_s.

$\delta_R = 0$ is the extreme case for unstable governing.

III. The calculation of the governor guarantees.

In the preceeding section we arrived at the conclusion that the maximum speed increase in the case of constant governing speed increases as the square of the load, whilst it increases linearly when the servomotor speed is proportional to the deviation of the control valve from its central position.

Digitized by Google

In reality a combination of these two cases will occur. In order to judge the quantitative conditions, the design of the control valve must be studied more closely. Fig. 7 illustrates one piston of the control valve, on the edges of which a few grooves are milled. In the initial conditions, the edges of the grooves tally with the opening in the bush — they are the actual control edges — whilst the piston edges have an overlap $s_{ü}$ on both sides. These grooves ensure that the governor does not continually oscillate. In the steady conditions, small fluctuations may frequently arise, to which the pendulum responds, but which should not be transmitted to the remaining governing mechanism, as they do not trouble the service.

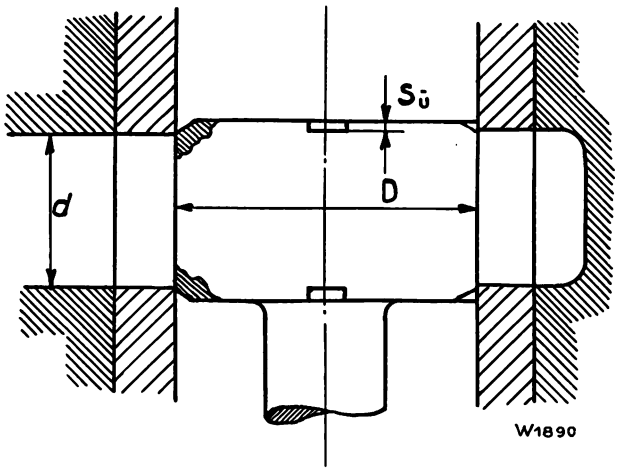

Fig. 7. Control valve.

This is very important for the governor as it saves same and prolongs its life.

If the stroke $s < s_{ü}$ then only small quantities of oil flow and the speed of the servomotor slowly increases. As soon as the piston edge takes over the control, the flow rapidly increases. The quantity of oil flowing per second increases as long as the cross-section controlled by the valve is smaller than the cross-section of the pipe to the servomotor. If we designate the stroke of the valve at which its controlling capacity ceases by s', the sum of the bar widths of the valve bush by b, the valve diameter by D and the pipe diameter by d, and if we neglect the quantity of oil flowing through the grooves, we have:

$$s' = s_{ü} + \frac{d^2}{D-b} \quad \ldots\ldots\ldots\ldots \quad 33)$$

The ratio $\frac{s'}{s_{max}}$ is 0.5 to 0.7 for normal designs.

The case then presents itself as follows: for approximately $^2/_3$ of the valve stroke (not of the course of the servomotor!) a linearly increasing and for the remaining third a constant speed of the servomotor must be taken. For the first period we then have:

$$\dot{m} = -K \times s \quad \ldots\ldots\ldots \quad 34)$$

the maximum speed being obtained at $s = s'$:

$$\dot{m}_{max} = -K \times s' = -\frac{m_{max}}{T_s} \quad \ldots\ldots \quad 35)$$

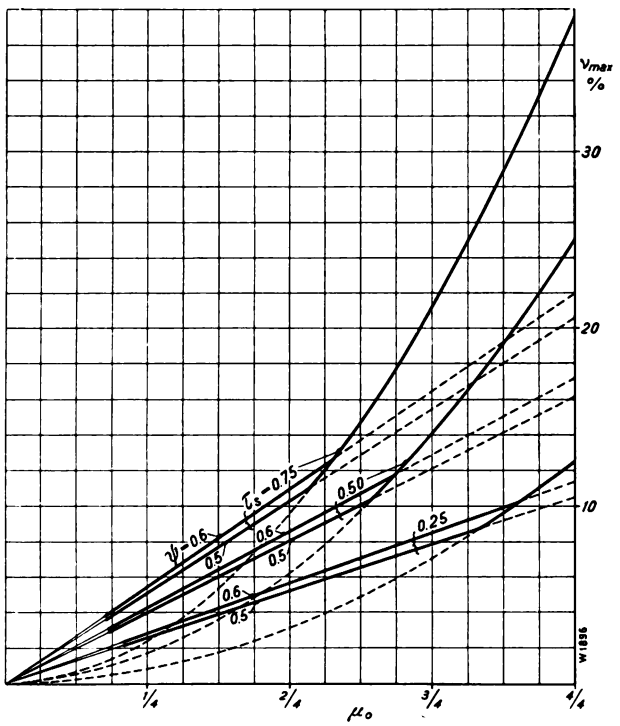

Abb. 8.

Let the ratio $\frac{s'}{s_{max}}$ be $= \psi$, then the relative equation of the servomotor speed resulting from equations 34) and 35) is:

$$\dot{\mu} = -\frac{\sigma}{\psi T_s} = -\frac{\sigma}{T'_s} \quad \ldots\ldots\ldots \quad 36)$$

We now have all values necessary for determining the maximum speed variation at all fluctuations of load.

The ratio $\frac{T_s}{T_a} = \tau_s$ is known. Equation 7) gives us the values for large load fluctuations. They increase or decrease as the square of the relative load μ_o.

For small reductions of load, Fig. 6 supplies the maximum speed increase for $\mu_o = 1$. However, in accordance with what has just been discussed, we must not take the value at T_s but at T_s', i. e. at $\tau_s' = \psi \tau_s$. In Fig. 8 these values are plotted for

Digitized by Google

ν_{max} for three different values of τ_s as a function of the fluctuation in load, whereby the value of 0.6 and 0.5 respectively has been assumed for ψ. We obtain the interesting result, confirmed by experience, that the speed increase augments linearly up to a certain limit, which is almost independent of the value τ_s, and then augments as the square. This limiting value, which in the diagram is found at nearly 10 %, depends principally upon the factor ψ. The larger ψ, i. e. the smaller the diameter of the control valve, the greater the speed variations at small loads. It is to no practical advantage to take ψ less than 0.5. The valves are so amply dimensioned that when switching off partial loads these small speed fluctuations can be guaranteed.

In conclusion we give the results in the form of a table and employing the normal technical units.

Table II.

$\tau_s = T_s/T$	0.25	0.50	0.75	
$\frac{GD^2 n^2}{N T_s}$	1088000	544000	363000	
4/4 load	12.5	25.0	37.5	Maximum speed increase in % referred to the conditions before governing.
3/4 »	7.9	14.0	21.0	
2/4 »	5.2	8.0	10.2	
1/4 »	2.6	4.0	5.1	
4/4 »	8.5	21.0	33.5	Maximum speed increase in % referred to the conditions after governing, with a permanent cyclic irregularity of 4 %.
3/4 »	4.9	11.0	18	
2/4 »	3.2	6.0	8.2	
1/4 «	1.6	3.0	4.1	

The value $\tau_s = 0.25$ represents a minimum economic limit, as still lower values would necessitate unreasonably large flywheels. $\tau_s = 0.75$ represents a maximum limit for admissible speed fluctuations in operation. At higher values the governing mechanism would soon become unstable.

We have thus succeeded on the strength of certain assumptions in finding theoretical minimum values for the speed fluctuations. It is a matter of fact that mass effects and frictional resistances of the governor act in the same manner as increased inertia, so that the values established by theory would be exceeded.

The testing of a large number of governors in operation has, however, proved beyond doubt that the theoretical values and even the small speed variation when switching off ¼ load can be adhered to. This is a proof of the very conscientious execution of the Escher Wyss governors. Assuming the pressure before the turbine to be constant during the governing manœuvre, the figures given in Table II may be accepted as practically realizable guarantee values.

Summary.

After the performance of the Escher Wyss governor is concisely explained in section I, governing with constant and variable servomotor speed is investigated in section II. In the first case, the problem may be solved in general, whilst in the second case, the special design of the Escher Wyss governor must be taken into account. In section III, the influence of the control valve on the governing mechanism is explained and finally the governor guarantee values for open turbines are ascertained.

Digitized by Google

The development and the performance of modern Escher Wyss & Co. turbine governors.

By Anton Gagg.

It is not the purpose of the following article to give a complete survey of the development of turbine governors, but chiefly to point out the factors, which have influenced the design of our "universal governor" with actuator type 25, as found on the market today.

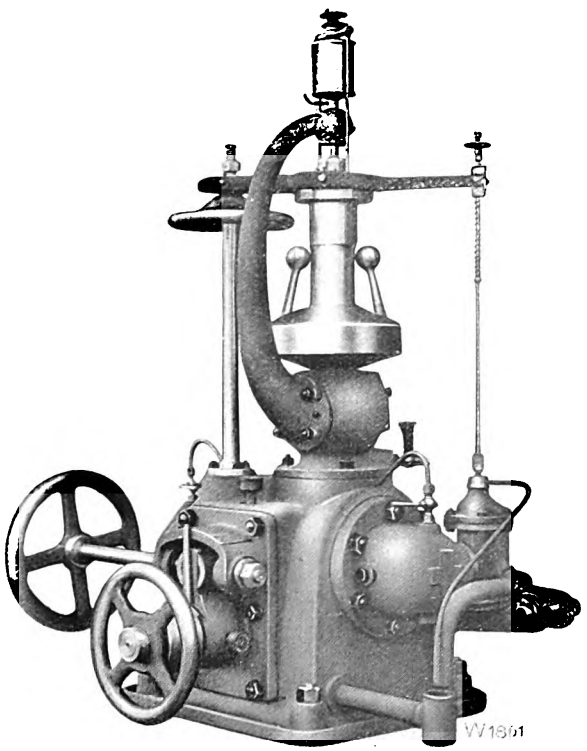

Fig. 1.

The orginal governors having mechanical auxiliary power (servomotor) for operating the adjustable parts of turbines, all operated with comparatively long closing periods, which in some designs amounted to several minutes. These governors could, therefore, not satisfy the increased requirements arising from the coupling of electric generators with turbines. They were substituted by so-called hydraulic governors, in which the governing work, i. e. the work required to adjust the regulating mechanism of the turbine, was performed by an "hydraulic servomotor". This latter generally consists of a piston moving in a cylinder, the two sides of which are alternately put under hydraulic pressure by means of a control mechanism. At first the supply water for the turbine was utilized for this purpose but a number of disadvantages resulted therefrom. Firstly in spite of expensive filtering plants, it was in many cases quite impossible to keep the water sufficiently clean and consequently the regulating parts were comparatively quickly worn out. This not only diminished their sensitiveness but also frequently gave rise to serious trouble.

The designers of Messrs. Escher Wyss & Co. were the first to go a step further and created the now universally used oil-pressure governor in which the necessary pressure for operating the governor was artificially produced by special pumps, the liquid used being oil. One of the first governors of this type was supplied to the large power station "Jonage" in Cusset near Lyons, where each of the 16 turbines is governed by an oil-pressure governor receiving its oil under pressure from a differential plunger pump combined with an air vessel. After 30 years of service, these governors are still operating today. Since then Messrs. Escher Wyss & Co. have executed a vast number of governors of different types up to the largest sizes.

The advantages of oil-pressure governors over water-operated hydraulic governors are apparent.

Digitized by Google

In addition to avoiding the above-mentioned trouble caused by the adverse influence of contaminated water, the oil-pressure governor offers the possibility of securing any desired amount of governing work even at low heads quite independently of the pressure of the water. It is, therefore, not surprising that oil-pressure governors have almost completely superseded water-operated governors.

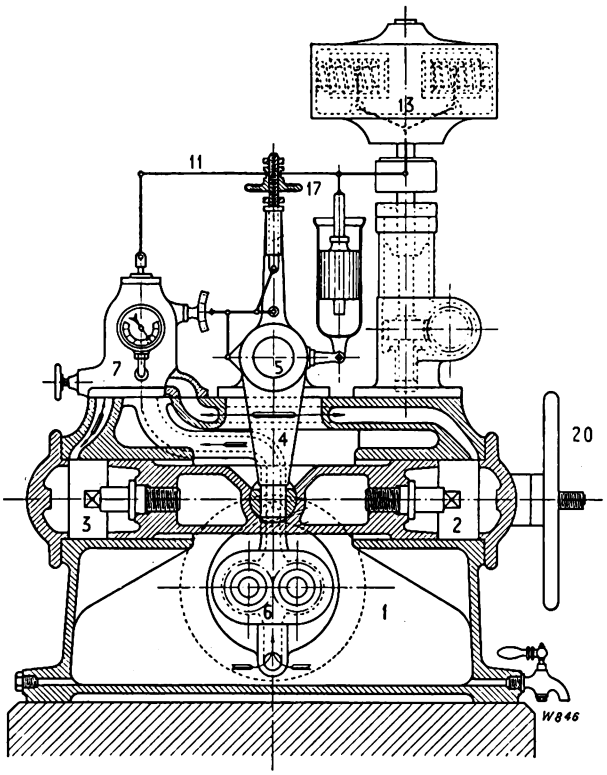

Fig. 2.

The design of the present-day types of oil-pressure governors is the result of a very slow development. With the original designs, the servomotor with the actuator was always separately erected. The oil pump with its accessories was also separately mounted and connected with the servomotor by a system of pressure and return pipes. Even at this early stage the governor proper without the pump was standardized in order to have a normal type available for the most varied conditions. An example of such a standardized governor is the governor of the La Mescla plant near Nice, illustrated in Fig. 1. The illustration plainly shows the servomotor cylinder with the control valve influencing the pressure distribution in the latter and actuated by a two-pendulum spring governor with rigid oil brake.

In 1905 Messrs. Escher Wyss & Co. created for the first time a type of governor in which the servomotor, the actuator and the part producing the oil-pressure were combined to form a self-contained unit. This is the so-called "universal governor", type 1906, which may be regarded as the precursor of

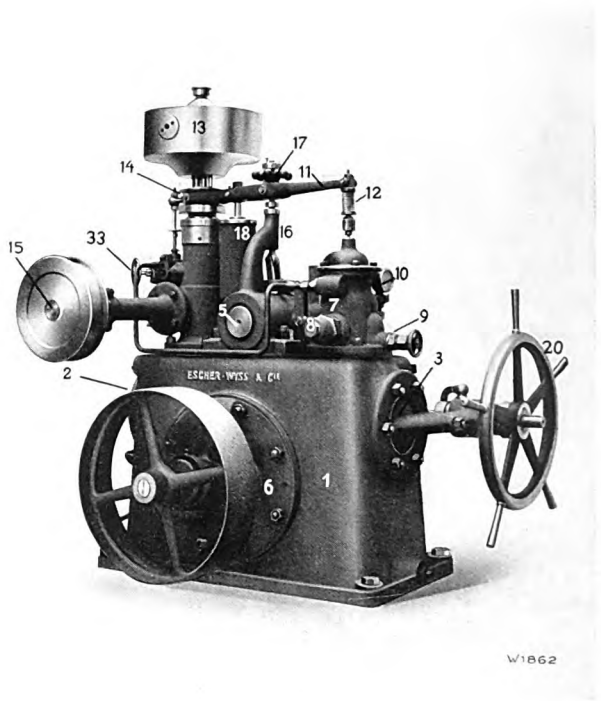

Fig. 3.

the present universal governor. Since then more than 2500 such governors with their own oil pumps have been manufactured, the designs having been gradually developed to their present form. After giving a short survey of the precursory types 1906, 1916 and 1922, we shall proceed with a description of the present governors, which fully satisfy all modern requirements. In this connection we would remark that apart from complying with the self-understood requirements of perfect performance, simple manipulation and absolute reliability in service, modern governors must be so designed that they can be manufactured readily on mass production lines. This is also necessary to keep down the expenses, as the price of the governor often is an important factor, especially in small turbine plants. The standardization of the governors, i. e. the limitation to a few definite types, meets these requirements. Of course the different types of governors must be so equipped that they can be

Digitized by Google

handled by the ordinary station staff without requiring the services of a specialist to adjust them for the different service conditions of the station. This is far more important for the customer and the manufacturer than eventually securing fine governing as a result of tedious adjustments. When describing the latest designs, we shall point out how

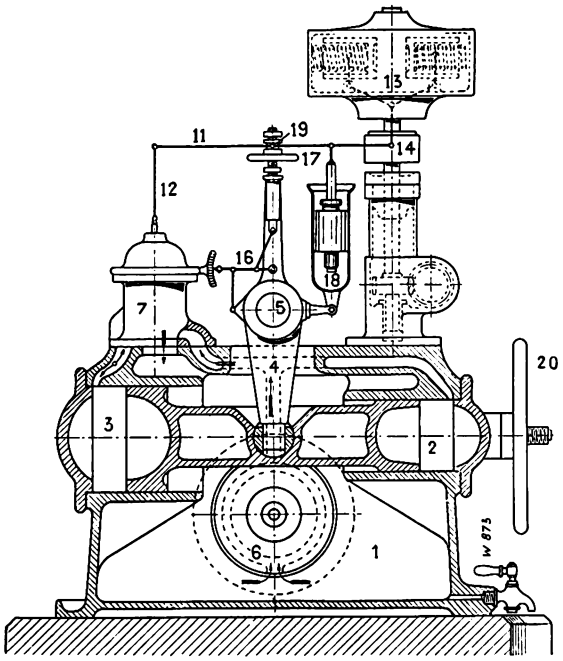

Fig. 4.

they satisfy the above-specified requirements. We will now briefly discuss those governors, which may be termed the precursors of the present day type.

Governor types of 1906.

In that year Messrs. Escher Wyss & Co. took up for the first time the series manufacture of oil-pressure governors in six sizes of from 360 to 9360 ft. lbs. governing work. The smaller governors of from 360 to 1800 ft. lbs. capacity were designed as so-called "through flow" types. With these types, the oil in the central position of the actuator flows past the controlling edges of the regulating valve with very little pressure into the discharge and the oil-pressure required to perform the governing work is produced only at the instants when a governing movement has to be performed. The oil pump thereby has to supply the full quantity of oil necessary for filling the servomotor cylinders within the shortest closing time provided for. The advantages of this arrangement over the larger governors with pressure-oil storage hereinafter described consists mainly in simpler manipulation owing to the absence of the pressure-oil reservoir. On the other hand, the pumps then become comparatively large, which would be unsuitable for the larger governors.

The design and appearance of the small governors, type 1906, is shown in Figs. 2 and 3. In cas-

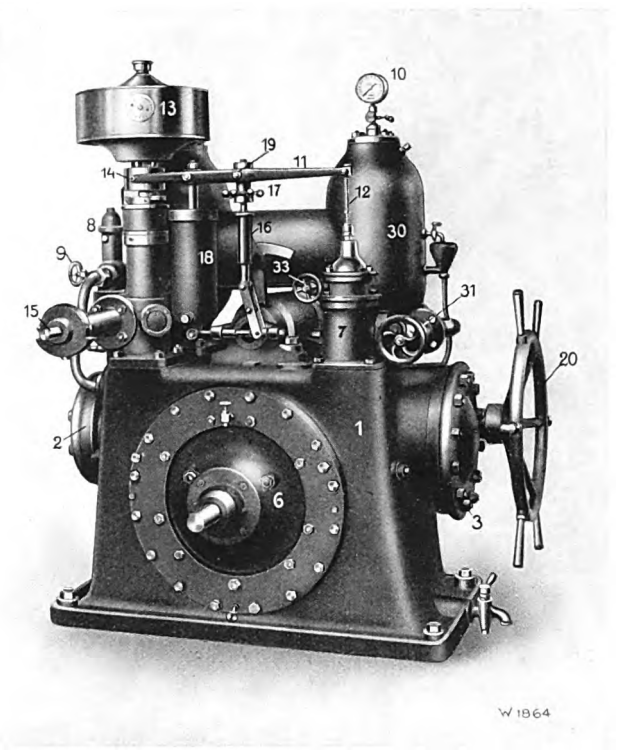

Fig. 5.

ing 1, which serves as oil reservoir, two cylinders 2 and 3 are cast, in which a double piston moves, the movements of which are transmitted to the main shaft 5 by means of lever 4. The governing mechanism of the turbine is actuated from this shaft by means of a suitable gear. The pressure in cylinder 3 tends to open the turbine, whilst the pressure in cylinder 2 effects a closing movement. So long as the pressures in both cylinders are equal, no movement of the piston takes place. However, as soon as the pressure in one or the other cylinder dominates, the piston will move in the corresponding direction and open or close the turbine. The oil under pressure required for the servomotor is supplied by the toothed wheel pump 6 provided on the side of casing 1. The oil flows through a cast-in duct to the control valve 7, which influences the pressure distribution on both sides of

Digitized by Google

the cylinder in the well-known manner. The distributing piston contained in the control valve is influenced by a spring governor 13 of the type used in those days, through the connecting rod 12 and lever 11. A relay 16, on the spindle of which is situated the small handwheel 17 employed for varying the speed and for starting and stopping the

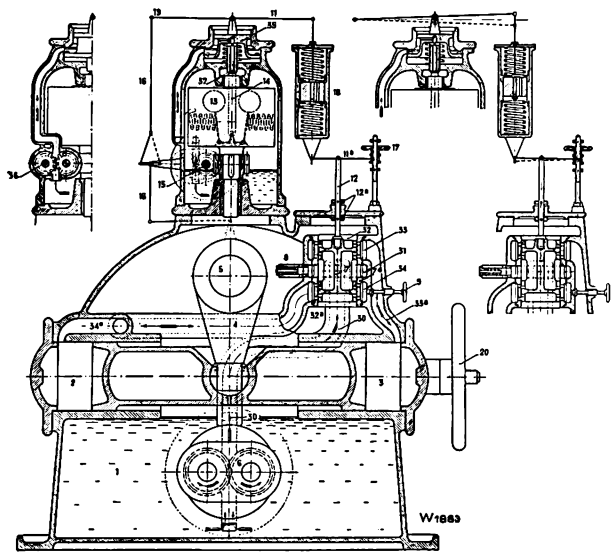

Fig. 6.

turbine, is provided between the control valve and the spring governor. The dashpot 18 situated between the relay and the pendulum support forms a so-called flexible relay in the form of a "pendulum resetting device".

For governors of over 1800 ft. lbs. capacity the system of pressure-oil storage has been adopted. The oil pump here supplies a comparatively small part of the quantity of oil required for feeding the operating cylinders during the instants of large governing movements. Air vessels are provided between the oil pump and the actuator, which are of such dimensions that they suffice to reliably supply the balance of the quantity of oil required. The pump permanently operates against the full air vessel pressure of 213 lbs./sq. in. Figs. 4 and 5 illustrate a diagram and a view of the governor.

A differential piston, moving in a smaller cylinder 2 and a larger cylinder 3, serves as servomotor. The movements are transmitted in the same manner as with the small types. The smaller cylinder 2 is directly connected with the air vessel and, therefore, is permanently under pressure of the oil and tends to close the turbine, whilst the large cylinder 3 according to requirements is connected either with the air vessel or the oil reservoir. In the first case, the turbine is opened by the excess energy of the large cylinder, whilst in the second case, the turbine is closed by the constant pressure prevailing in cylinder 2. Under steady conditions a mean pressure

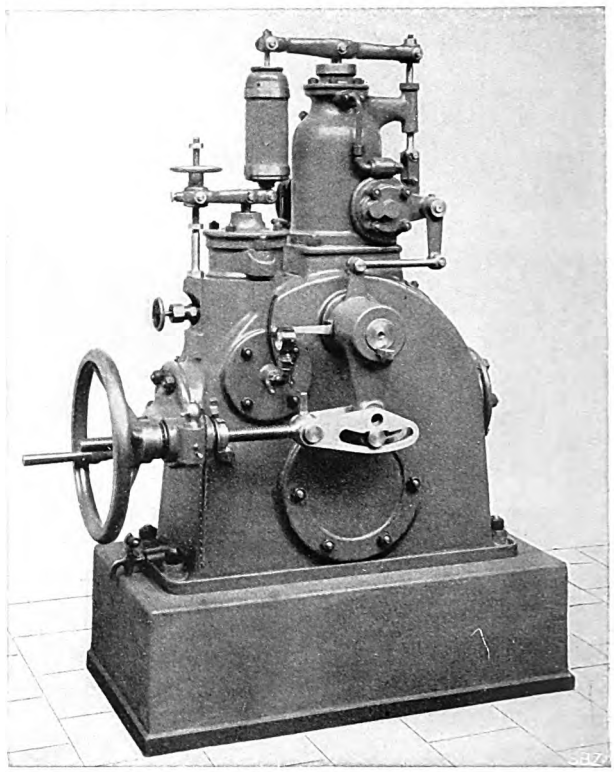

Fig. 7.

is automatically maintained in the large cylinder so that the power on both sides of the piston is equal and no movement takes place.

A three-plunger pump with oscillating cylinders serves as oil pump for these types. It is designed with as small a clearance as possible and is provided with a snifting valve to ensure the air vessel filling with air. The pressure distribution in cylinder 3 is again regulated by the valve 7, which is insfluenced by the spring governor 13 in the same manner as with the small types. The relay and the dashpot are of exactly the same design as with the small governors.

Governor types of 1916.

The governor type of 1916 marked a considerable improvement inasmuch as the actual controlling mechanisms were combined to from a self-contained

Digitized by Google

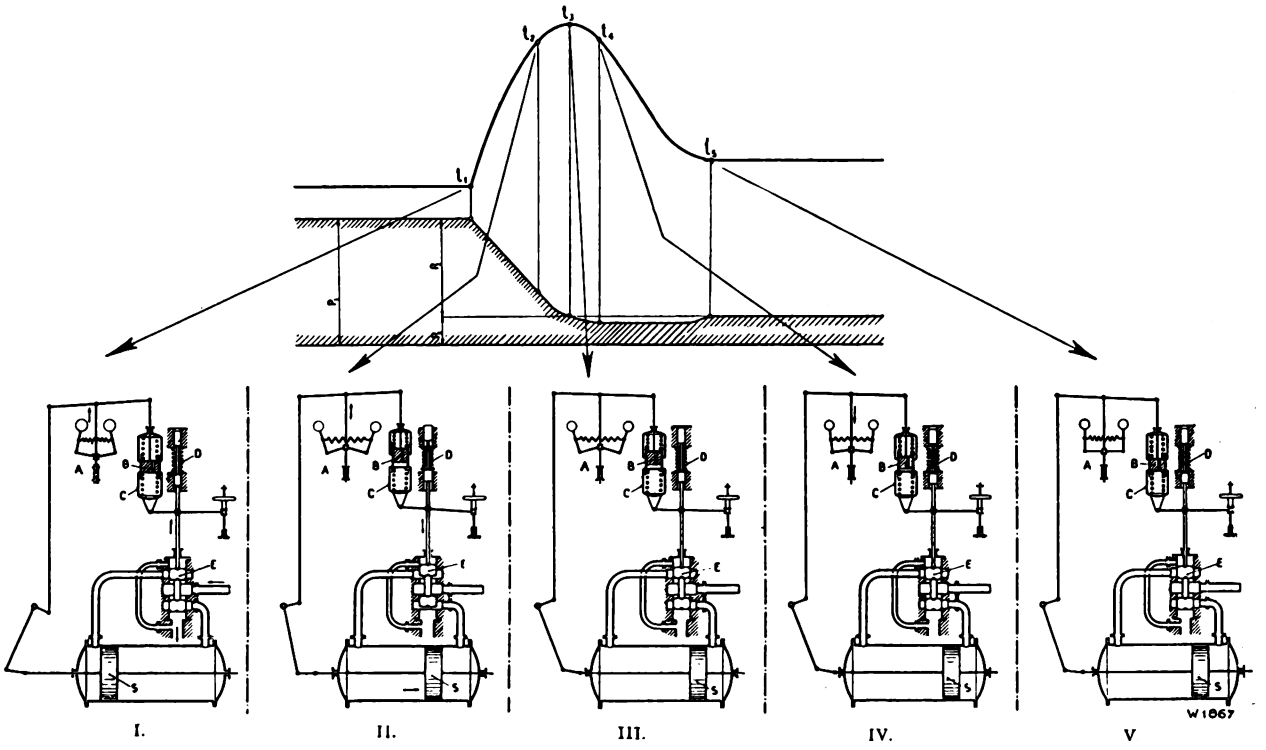

Fig. 8.

apparatus, which was used in one uniform size for all types and sizes of governors. This step permitted actuators being manufactured on mass production lines by the most modern processes, which not only cut down expenses but also enhanced the quality of the apparatus turned out.

The governor types 1916 with their actuators were described at length by Prasil in the "Schweizerische Bauzeitung", Volume LXIX and LXX, 1917, who at the same time reported on extensive tests with this new type of governor. We may, therefore, refrain from giving a detailed description here. We would, however, point out that the through-flow principle was adopted also for the governors of more than 1800 ft. lbs. and up to 9360 ft. lbs. capacity, as this type of governor owing to its simplicity had proved very efficient. The principle of pressure-oil storage was accordingly only retained for governors having a capacity of over 9360 ft. lbs. work capacity.

Figs. 6 and 7 represent a diagrammatic section and a view of a governor, type 1916, of medium size.

Governor types of 1922.

The 1922 type of governor in its general design corresponds to that of 1916, except that an innovation was created whereby the interruption of the governing manœuvre was no longer effected solely by means of relays, but was made dependent on the cessation of the acceleration. This interesting construction has been described in various journals, amongst others in the "Elektrotechnische Zeitschrift", 1925, Number 15, which latter description is reproduced in an abbreviated form in the following lines, along with the diagram, Fig. 8.

The actuator renders the effective governing movements dependent on the acceleration and only regulates the steady conditions depending on the absolute speed of the machine. The practical performance of the governor has thus been well adapted to the theoretical exigencies. In Fig. 8, S represents the servomotor controlled by the regulating valve E. This latter is provided with a protrusion at its active edges, which is interrupted by a few grooves of very small section. The spindle of piston E is linked to a control lever, right hand side of which serves as fixed fulcrum, whilst the left hand side is linked to the spring casing C. A spring D is so attached to the extension of the piston spindle, that the control piston can only be moved by the distance corresponding to the protrusion at its edges without

Digitized by Google

further contraction of the stretched spring D, so that only the small grooves of the control edges are active. If the control edges of piston E are to develop their full effect, the stretched spring D must be further compressed. A complete displacement of the control piston E, i. e. rapid movement of the servomotor is, therefore, only possible by overcoming the resistance of spring D.

The damping piston B is connected with the governor lever, which latter is controlled by the spring governor A by aid of a precontrolling device. Under steady conditions, piston B is maintained in its central position relatively to casing C by two springs in tension, the degree of tension being less than that of spring D. The tension of this latter spring can be overcome by the actuator only when the tension of the cataract springs is aided by a supplementary force. This force is produced during a comparatively rapid movement of piston B in the oil-filled casing C by the pressure required to displace the oil from one side of the piston to the other. Such a rapid movement of piston B is, however, prevalent when the sleeve of the spring governor A moves correspondingly quickly, i. e. when an intense acceleration of the machine takes place. It follows that a complete displacement of the control piston E is effected when a certain acceleration of the machine takes place and can be maintained only as long as this acceleration lasts. When the acceleration and therewith also the rapid movement of the cataract piston B ceases, the control piston E under the influence of spring D and utilizing the yielding capacity of the cataract resumes its central position and the rapid movement of the servomotor is interrupted. The servomotor is then purely under the influence of the small grooves in the control piston, which regulate the position of the servomotor piston corresponding to the momentary load.

With the aid of Fig. 8 we will now describe how this device functions. In the diagram, the upper curve represents a speed variation following a decrease in load taking place at time t_1, whilst the lower curve shows the movement of the servomotor during the same time. At the instant t_1 let the load on the machine be suddenly decreased from P_1 by the amount P_2 to P_3; the speed of the machine then rises very quickly, as shown by the speed curve, and the sleeve of the centrifugal governor A and the cataract piston B are raised. At the beginning of this movement, the control piston E is entrained by the tension of the upper spring in the cataract. However, as soon as its spindle reaches the stop of spring D, a further upward movement of piston E can take place only when a pressure prevails over the cataract piston B, which jointly with the tension of the spring over this piston produces a displacing force, which is greater than the resistance of spring D. The pressure above piston B, however, is dependent on the speed with which it moves in casing C, as the higher this speed, the more pressure is required to force the fluid in the cataract through the small bores in piston B. With the powerful acceleration resulting after time t_1, a correspondingly high pressure will naturally at once be produced above piston B. The control piston E is immediately energetically displaced and a reduction of the admission to the turbine is effected. In the instant when the load decreases, i. e. at the time t_1, the actuator was in the position drawn for this instant, and all its parts were in a state of rest. Up to the time t_2, the position indicated for this time prevails. The sleeve of the centrifugal governor A has risen and the control piston E has likewise been moved upwards. The servomotor piston has moved from left to right and reduced the admission to the turbine.

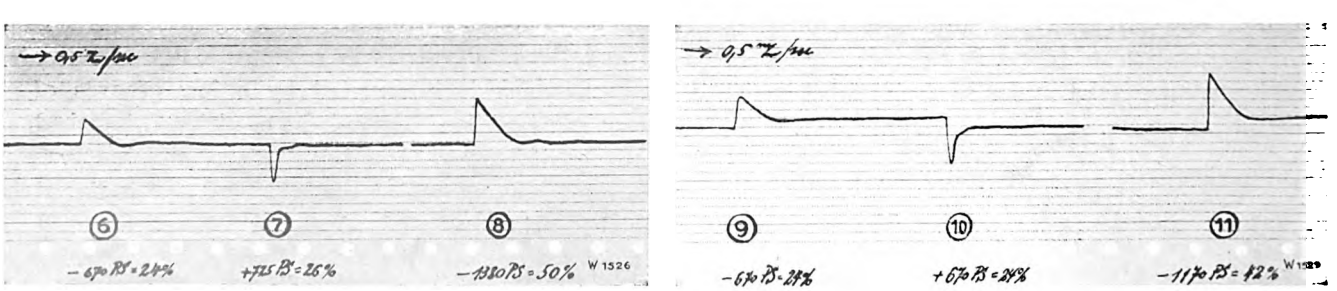

Fig. 9.

Digitized by Google

Piston E remains displaced until the acceleration and therewith also the pressure over piston B becomes so small that the spring D can again force the piston back into its central position. By appropriate choice of the tension of the springs and of the bores in piston B it can, however, be arranged

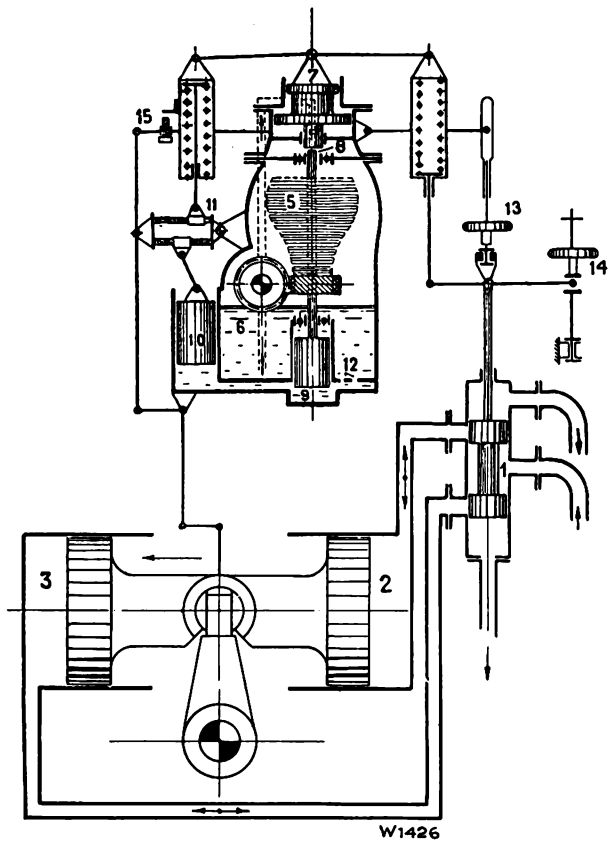

Fig. 10.

that the control piston E commences to recede at the time t_2. Thus by the time t_3, in which no acceleration takes place and under certain premises the admission of the turbine corresponds to the new load, the control piston E has again been moved back so far that only the small control grooves act. The actuator parts are then in the position shown for the time t_3 whereby the sleeve of the centrifugal governor is in the position corresponding to the increased speed, likewise piston B, whilst the control piston E including piston B has returned to its central position under the influence of spring D. The servomotor piston S has moved just so far to the right that the correct admission for the turbine is adjusted, since its rapid movement was interrupted the moment the correct admission prevailed, i. e. with the complete cessation of the acceleration.

Now, as the control piston E under the action of the stretched spring over piston B provisionally remains displaced upwards by the distance corres-

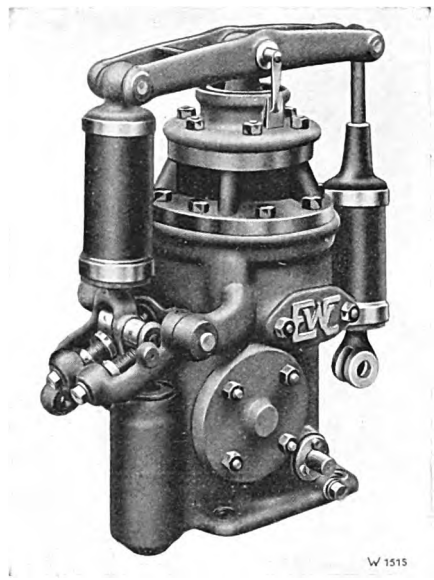

Fig. 11.

ponding to the protrusion of the controlling edges, the servomotor piston S under the action of the small controlling grooves is moved still a little further to the right in the direction of closing. The admission of the turbine, therefore, becomes too small and consequently the speed of the machine decreases; the sleeve of governor A moves downwards and takes piston B along with it. The small pressure produced by the downward motion of the latter at once suffices to adjust the control piston E to its central position, so that the movement of piston S is completely interrupted. This may be the case at time t_4, for which the corresponding position of the actuator parts are shown in the diagram. The speed of the turbine owing to the admission being too small is decreasing, consequently the sleeve of the centrifugal governor descends still further, simultaneously causing the cataract piston B to move back through the relative displacement of the casing C under the influence of the spring over piston B. As soon as the mutual central position of the parts B and C is reached, the governing cycle is

Digitized by Google

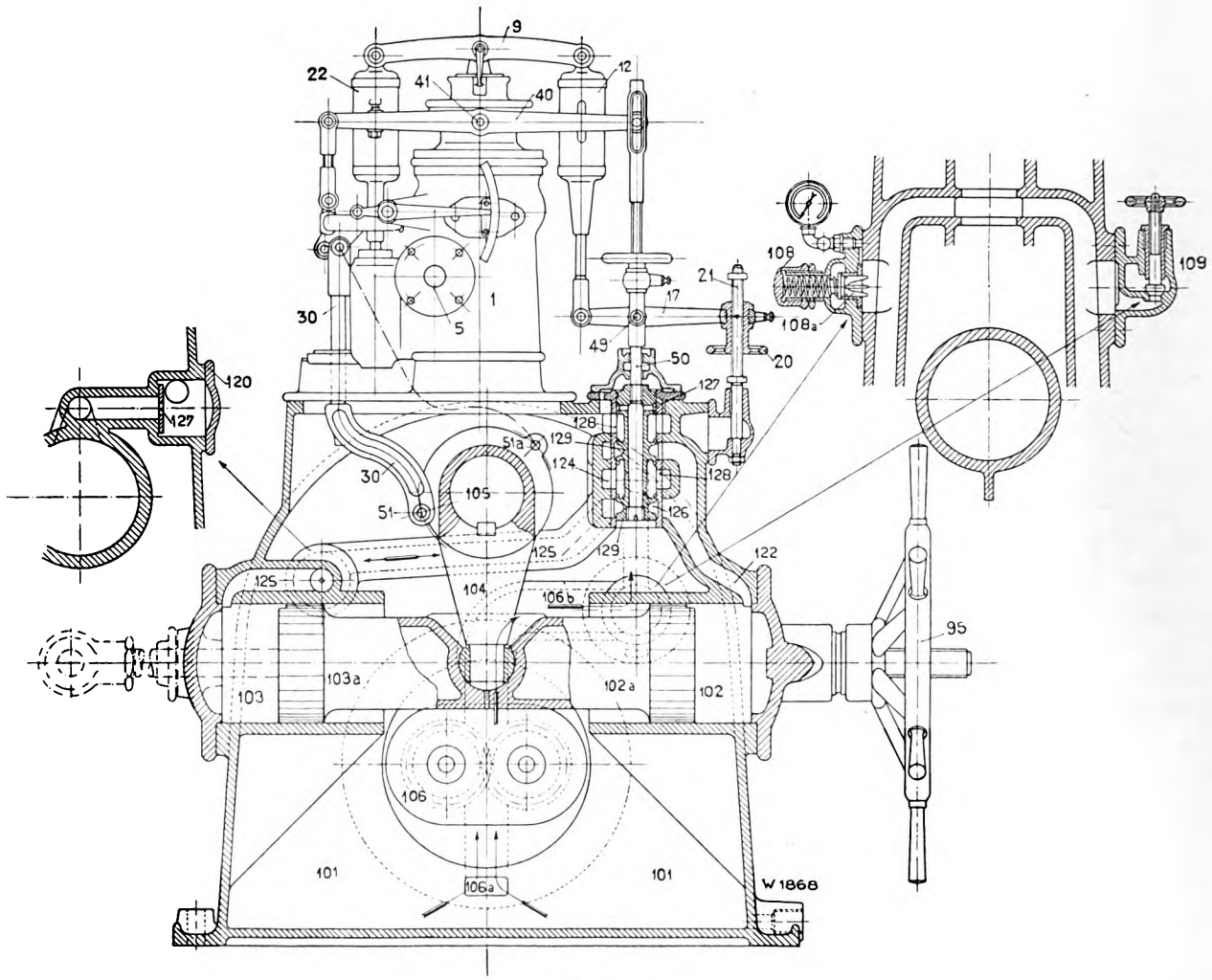

Fig. 12.

terminated. With the slightest further diminution of the speed, the grooves of the control piston E again enlarge the opening of the auxiliary motor by the small amount required for the exact adjustment of admission P_3, whereby the position for the time t_5 illustrated in the diagram and corresponding to the new load conditions is attained.

This actuator proved quite satisfactory in practical operation but nevertheless it was abandoned as it laboured under a fundamental disadvantage peculiar to all so-called "acceleration actuators". The governing movements of the actuator were dependent on the acceleration, whilst in reality the speed of the turbine has to be regulated. The tachometric measurement is, therefore, inevitable in addition to the accelerometric measurement and a combined system of acceleration and speed regulation results. It is quite obvious that such a system is theoretically and practically more complicated than a simple tachometric system. As the studies and tests undertaken after 1922 proved that the same excellent results could in every respect be obtained with a pure tachometric system, this latter was eventually adopted.

The governor types of 1925 and 1929.

These types are characterised by the use of a new actuator, the latest 1929 design of which only differs from the 1925 type in minor details. Type

Digitized by Google

1925, is the outcome of the experience gained with more than 1500 governors of the types 1916 to 1922,

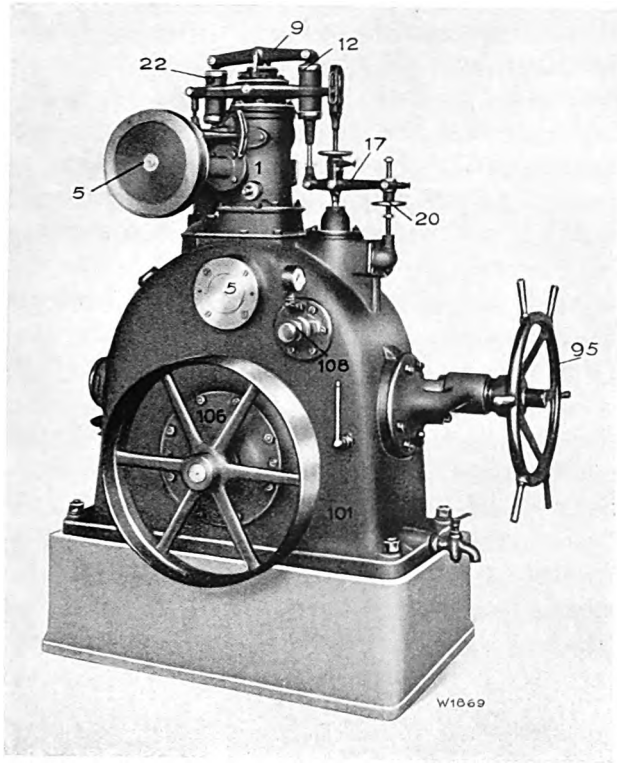

Fig. 13.

greatest care having been taken to eliminate all those features, which during this lengthy period of observation of the former governor designs had given rise to trouble. All parts of the new type of actuator were designed and dimensioned to fully satisfy the requirements of roughest service. How efficiently this problem has been solved is borne out by the fact that the first actuator of this type delivered in 1925 for the plant of Mr. P. Zweifel in Uzwil shows no traces of near after more than 26 000 hours of service.

The new type of governor is so well built that it can mostly be put into service straight from the workshops without previous adjustment with the turbine, a point, which the experienced governor expert will greatly appreciate. As examples we will only mention the Burglauenen plant of the Jungfrau Railway in Switzerland and the Heimbach station in the Eifel Mountains, which have been described in a number of publications. In the former plant, a number of tests and tachographic records were made after starting up the plant, without having made any preliminary adjustments or tests. The excellent results obtained were published in the periodical "Wasserkraft und Wasserwirtschaft", 1928, Number 1. Fig. 9 illustrates some of these results. Regarding the governors of the Heimbach plant, the station engineer, Mr. W. Stahl, reports as follows in the periodical "Schweizerische Technische Zeitschrift", Number 19 of May, 12 th 1927:

"It is remarkable that all governors operated perfectly from the moment of being put into service, without requiring any special adjustment. They can be adapted without difficulty to practically all service conditions. Paralleling is performed very quickly and reliably owing to the practically vibrationless regulation to synchronous speed, and the frequency fluctuations caused by heavy surges of the load and

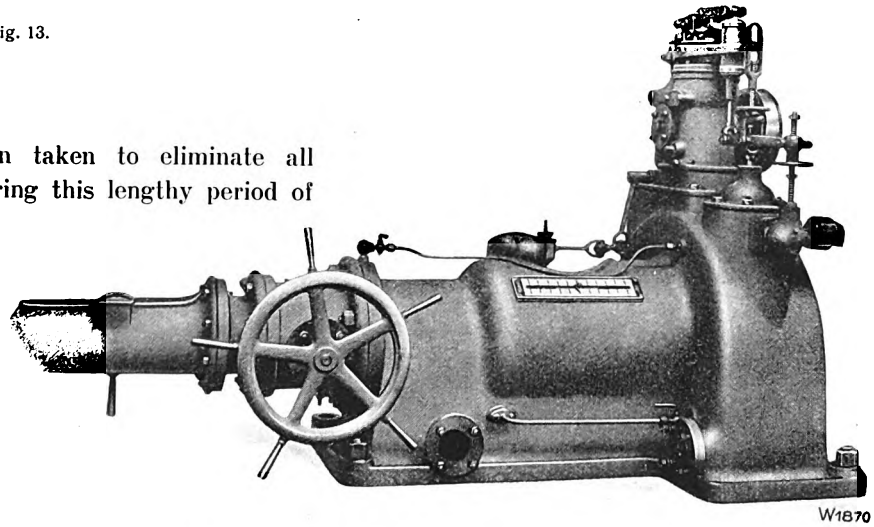

Fig. 14.

short-circuits in the network do not exceed the limits fixed by the test results. During the six months service, no governor has given rise to trouble of any consequence."

Digitized by Google

The design of the actuator permits each governor being adapted to the most varied service conditions and permits all desired adjustments being made whilst in operation. Thus the cyclic irregularity (the slip) of the governor may be varied within the required limits and it is possible to influence the

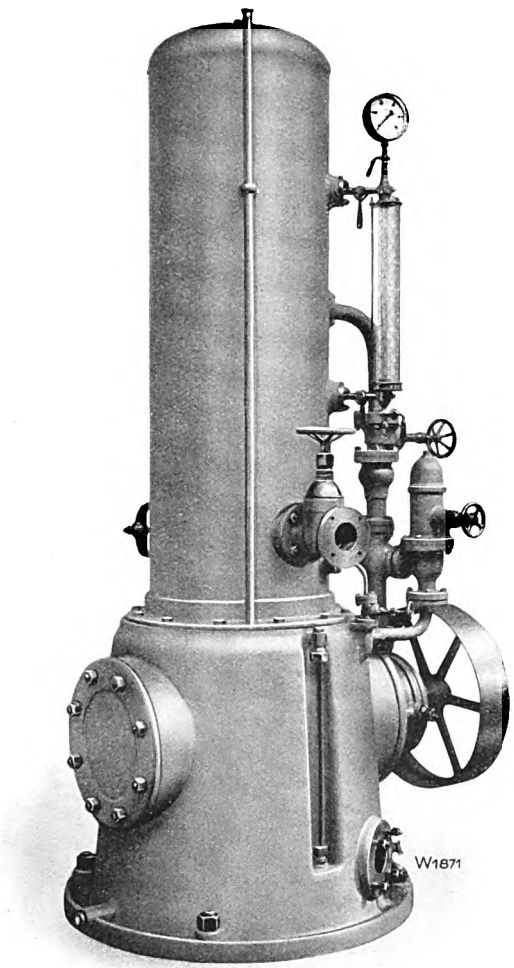

Fig. 15.

damping device from outside in order to achieve a vibrationsless transition to a set of conditions with fluctuations in load of any magnitude.

Fig. 10 illustrates diagrammatically the actuator in connection with a dual controlled servomotor as supplied with the normal types of Escher Wyss & Co.'s governors. Fig. 11 is a view of the actuator showing the arrangement of the various adjusting devices.

The centrifugal pendulum 5 is contained in an oil-tight casing, Fig. 10. This pendulum is equipped with but one central spring and two ball bearing joints, by means of which the movements of the weights are transmitted to the control rod 8. This latter influences the pressure by aid of a precontrolling device 7 of known design, which in turn displaces the distributing piston 1 of the servomotor by means of the system of rods and levers shown in the diagram. The damping device 9/10 is also contained in the casing. It acts as a so-called "pendulum resetting device", which during a governing manœuvre temporarily increases the cyclic irregularity of the pendulum by an amount necessary for vibrationless adjustment. The intensity of the damping effect may be varied by altering the stroke of the pump piston 10, and the duration of its influence, by adjusting the openings 12. The stroke limiting device with handwheel 13 permits the turbine admission being limited to any desired degree. Handwheel 14 serves to start and stop the turbine and

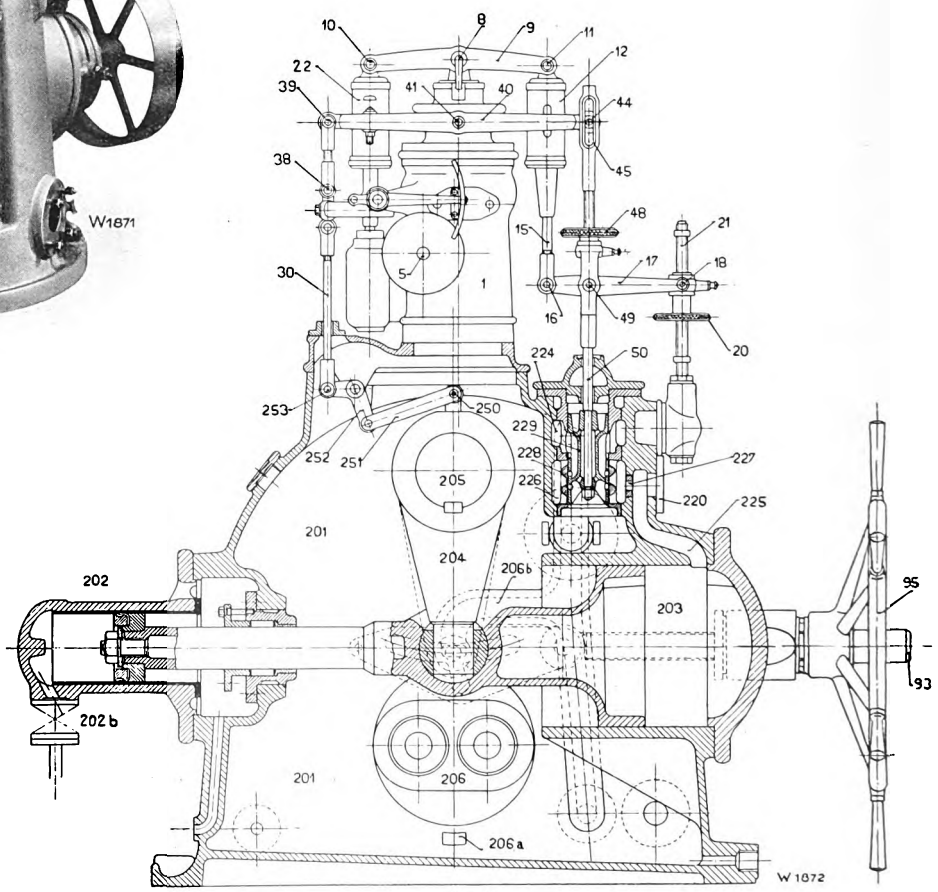

Fig. 16.

Digitized by Google

to alter the speed or the load during paralleling operations.

A new device, the so-called "no-load relay" is especially worthy of mention. By means of the adjustable screws 15 it acts on the rods and levers and very considerably increases the stability of the governor without, however, effecting a permanent increase of the cyclic irregularity (slip) of the governor between full-load and no-load. This device gretly facilitates paralleling, which is of special value in cases of failures.

As with the governor of 1916, so also with the latest types, the above-described actuator is used in one uniform design for all types and sizes of governors. It is manufactured in series of at least 100 at a time according to modern workshop methods.

Complying with the different requirements and conditions of modern water power plants, the new governors are executed in a number of different types, each of which may be had in various sizes as described in the following:

a) Governor type N (Normal type).

These governors for a capacity of 9360 ft. lbs. are designed on the "through-flow" principle like the smaller governors of the 1906 type described above. The general design still corresponds to the original types, except that the former actuator has been substituted by the new actuator. Fig. 12 is a sectional elevation of the servomotor and the control valve of such a governor, whilst Fig. 13 is a view as seen from the pump side. In Fig. 12 are visible the closing cylinder 102 and the opening cylinder 103 with the duplex piston moving therein, which transmits the movements of the servomotor to the governing shaft 105, whence a connection is established with the relays of the actuator by means of rod 30. The admission of pressure to the servomotor 102/103 is effected by means of the control piston 129, which moves in the bush 128. The control piston is linked at point 49 to the control lever 17, which is moved by the actuator. The outer right hand fulcrum of lever 17 rests on a sleeve, which may be adjusted on spindle 21 by means of the handwheel 20. This latter serves to vary the speed or to adjust the load when the turbine is paralleled with other machines. The illustration also shows the diaphragm 127 situated in the duct 125 leading from the control valve to the cylinder 103 which serves to adjust the closing time of the servomotor. The smaller the diaphragm, the longer the time required for filling or emptying cylinder 103, and the larger the closing time. Fig. 13 also shows the overflow valve 108 connected with duct 106 b, which is a normal spring-balanced safety valve determining the maximum oil pressure produced by pump 106. The governors are provided with a mechanical governing gear having a handwheel 95.

The advantage of this governor lies in its universal applicability and the extraordinarily simple handling. As soon as the turbine is started by

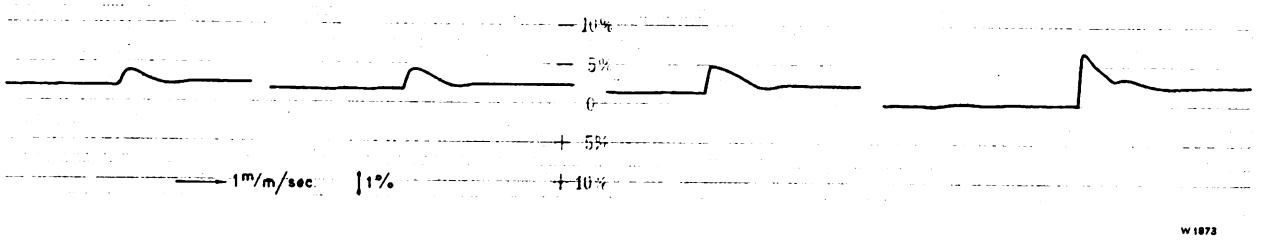

Fig. 17. Tachograph of load reductions with a 20000 HP turbine of the Vernayaz Power Station of the Swiss Federal Railways.

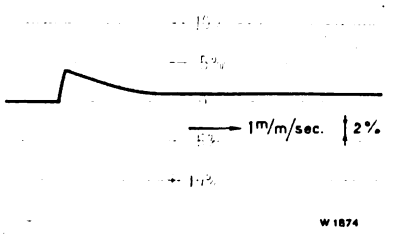

Fig. 18. Tachograph of a load reduction of 4600 HP with the 11000 HP turbine of the Cavaglia Power Station.

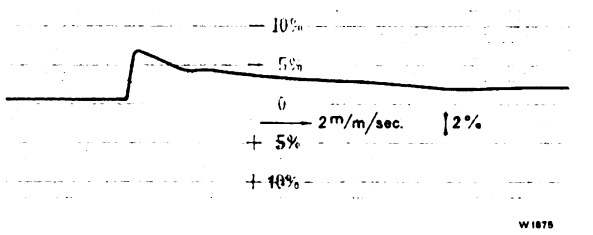

Fig. 19. Tachograph of a full load reduction with a 5600 HP turbine of the Oberems Power Station.

Digitized by Google

means of handwheel 95, the hand governing gear may be switched off and the desired speed adjusted by turning handwheel 20. No further manipulations are necessary.

b) Governor types G and V.

For still greater governing capacity it is no longer appropriate to adopt the through-flow principle as the dimensions of the oil pumps become excessive. These governors are, therefore, designed for oil pressure storage like the larger governor types of 1906, except that the oil pump is erected as a separate unit apart from the actual governor. With type G the governor shaft lies horizontally, with type V vertically. Fig. 14 illustrates a governor of the type V and Fig. 15 the oil pump appertaining thereto. The outer design of the governors of the type G corresponds to that of the governors type N whilst the oil pump is the same as that used for governors of the type V.

A type V governor is discussed in this number in an article dealing with the governor tests made in the Eguzon plant.

c) Governor type F.

Governor type F offers special advantages. With this type, the turbine is not closed by the oil pressure produced in the governor, but by hydraulic pressure, the necessary water being taken from the turbine pipeline. This arrangement offers the advantage that the turbine is automatically closed when for any reason the oil pressure fails. Fig. 16 is a sectional elevation of such a governor, the pressure water cylinder 202 with the pipeline being plainly visible. The actuator corresponds to that of the larger types of 1906 with differential servomotor.

In addition to the normal types of governors mentioned above, special types are designed for very large plants with exceptionally heavy governing work, which will be described in a future number. We would, however, point out that even these largest types are controlled by a normal actuator of the 1925/29 type.

All governors on manfacture are carefully tested on our test bed and adjusted to the service conditions for which they are intended. Another article in this number deals with this subject.

The tachographs reproduced in Figs. 17, 18 and 19 were made with various governors and they definitely prove the excellent governing qualities of our governors.

In conclusion it may not be amiss to mention that most of the older plants may be modernized by providing the governors with actuators of the latest design. In many cases very important advantages result therefrom and the relatively low costs fully justify the alteration. In this connection we refer to the article by Mr. Stucki contained in this number. *)

*) „Modernizing old governor by adopting new actuators" by F. Stucki, Augst, page 217.

Digitized by Google

The governors of the Eguzon plant.

By Anton Gagg.

The governors provided by Messrs. Escher Wyss & Co. for the Eguzon plant have to govern large spiral turbines, each of which under a head of 181 feet and a water consumption of 5445 gallons per second has a capacity of 15 000 HP measured at the turbine shaft. The speed of these vertical shaft turbines is 250 r. p. m. The governor, model 1925, type V, is equipped with the actuator described in the preceeding article. The details of the governor illustrated in Fig. 1 differs from those of the N-type governor shown on page 209, Fig. 10, inasmuch as a differential servomotor with a small closing cylinder 102 and a large opening cylinder 103 is used. The small cylinder 102 receives oil under pressure directly from the pressure-oil plant through pipe P, whilst the large cylinder 103 is connected either with the pipe P or the discharge pipe D by means of the control piston 129. Figs. 2 and 3 illustrate the constructional details of the servomotor and actuator including the mechanical hand governing gear, which acts on piston rod 90 by means of the worm gear and the threaded spindle for which purpose the rod and threaded spindle 93 are coupled by wedge 92.

On May 4th 1927 a number of govering tests were made with turbine No. IV of which the following is a description.

The test equipment. The load was provided by a water resistance installed in the tail race.

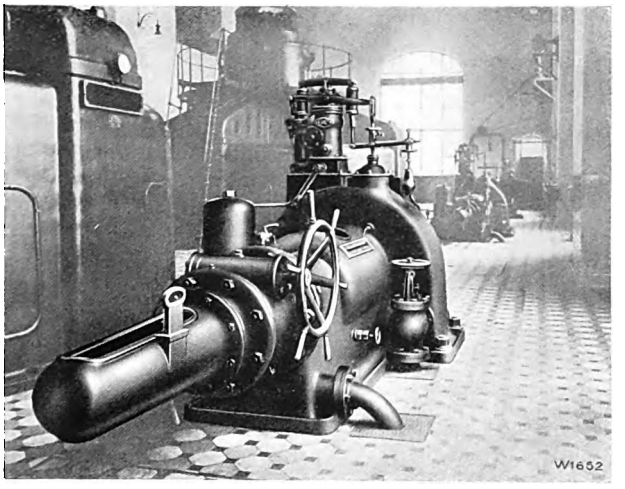

Fig. 5.

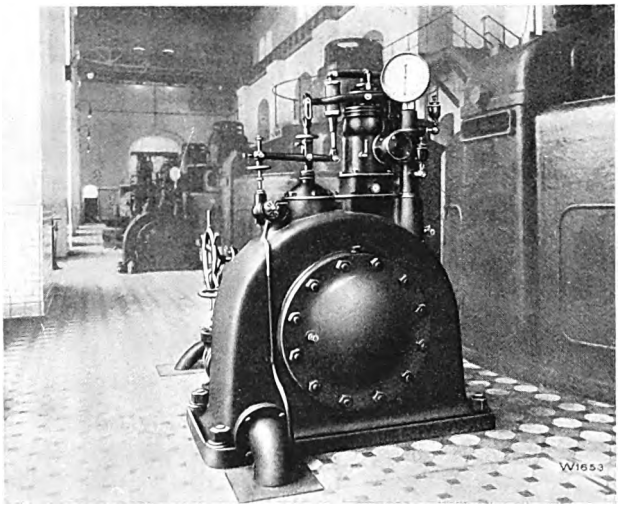

Fig. 6.

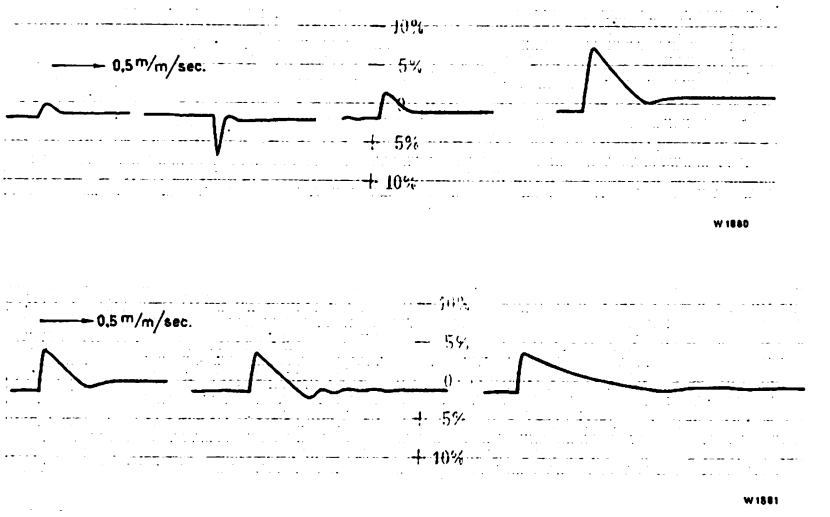

Fig 4.

The reduction of the load was performed by means of the main circuit breaker and the speed was

Digitized by Google

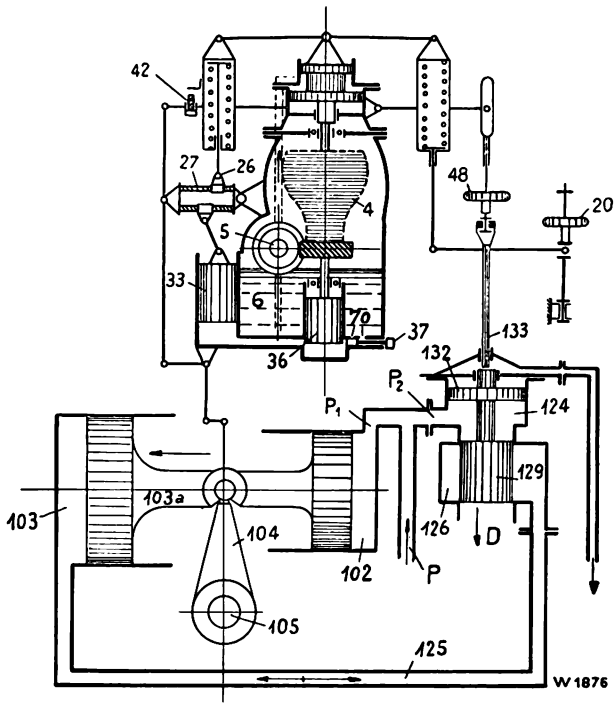

Fig. 1.

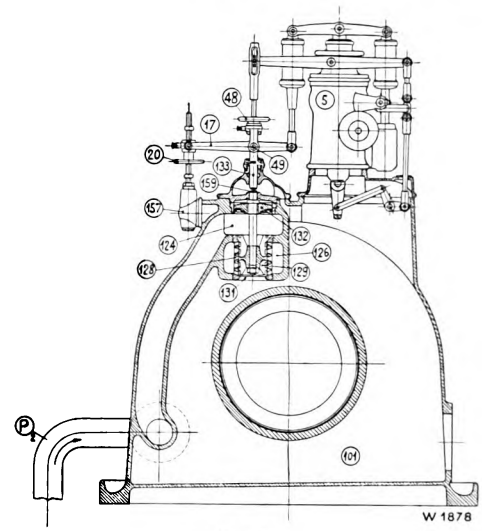

Fig. 3.

recorded with the aid of a tachograph of the Horn system. The staff under the supervision of Director Rollandin adjusted the load required during the various phases of the tests. The tachograph was placed in the turbine room and was driven directly from the vertical turbine shaft by means of a belt.

The test results. To begin with a number of tests with the load being removed were performed with a cyclic irregularity of about 2 per cent between full-load and no-load. The tachographs recorded are shown under Nos. 1 to 4 in Fig. 4. Later on a series of tests with reductions in load of 11 400 HP each were performed with different adjustments of the governor. The tachograph No. 5, Fig. 4, illustrates the variation of the speed at a total cyclic irregularity of about 2 per cent and slight damping. For tachograph No. 6, the governor was adjusted for isodrome regulation (cyclic irregularity = zero) and the damping was still slight, so that a small wave arises before reaching steady conditions. On the other hand, tachograph No. 7 shows the effect of considerably increased damping. The load reduction in question was made with a very small cyclic irregularity amounting to about 0.8 per cent in all. The time taken for the speed to become steady was comparatively long owing to the powerful damping, and it passed over into the new state with practically no oscillations.

The tests with different adjustments could be performed without a hitch in direct succession, and the results may be considered excellent both quantitatively and qualitatively.

Figs. 5 and 6 are two views of the governors taken in the power station.

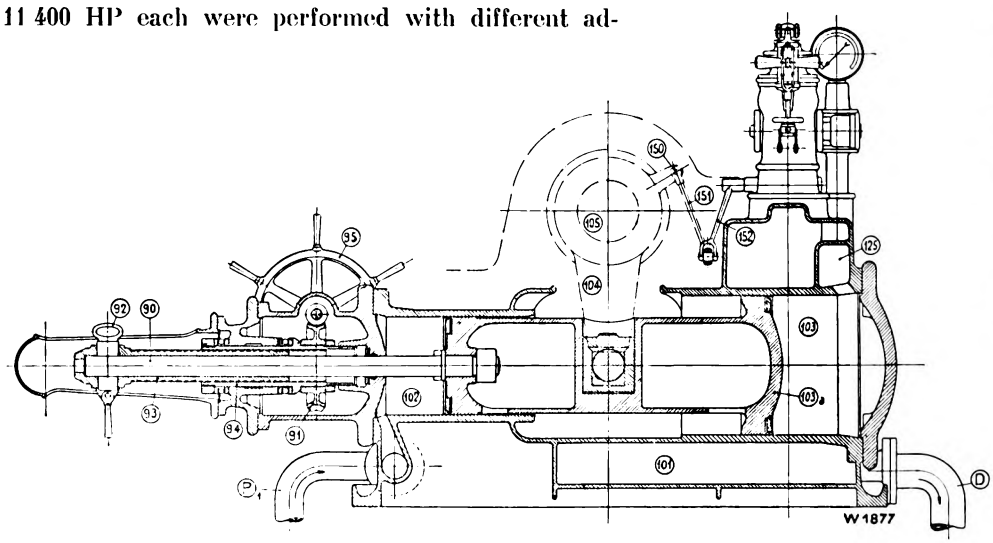

Fig. 2.

Digitized by Google

Modernizing old governor by adopting new actuators.

a) The Augst Power Station of the Basle Municipal Electricity Works.

By F. Stucki, Station Engineer, Augst.

Owing to the special conditions prevailing in the Augst power station, the governing of the turbines is a rather difficult task. The draught tubes are 119 feet long, i. e. about six times the mean turbine head of 20 feet. The governors of the originally installed turbines could, not eventually satisfy the increased demands from the present service, especially as in spite of careful maintenance the parts of the turbine regulators were not in perfect condition after 16 years service. As our station at times has to feed the network of the City of Basle with its extended tramway system quite alone, it was found necessary to improve the existing governors. The administration of the works was thereby confronted by two alternatives, viz: firstly either to subject the governors to extensive and expensive overhauling, whereby the complete renewal of individual parts, such as the control valves, could not have been avoided and the station would still have had the old governors, or secondly to purchase new actuators satisfying modern requirements. A decision was made in favour of the latter alternative in the hope that the quality of the governing would be considerably improved.

Messrs. Escher Wyss & Co., who had supplied the original governors with the turbines, on being approached, suggested providing the existing governors with actuators of the type 25. Thereupon the firm received a trial order for one such actuator. After extensive tests had been made with this new actuator and after the lapse of a period of observation, the excellent results induced us to equip the other nine turbines with new acuators and control valves for which an order was given to Messrs. Escher Wyss & Co. We desired to play for safety and, therefore, formulated guarantees based on test results, which in vieuw of the special conditions prevailing with our plant, must be considered rather severe. Thus we stipulated that the maximum fluctuation of the speed when the turbine was running idle should not amount to more than $\pm$ 0.1 per cent, and with the machine switched on a water resistance and producing any desired load the maximum variation must not be more than $\pm$ 0.25 per cent. The cyclic irregularity was to be adjustable in service within the limits of from 1 to 6 per cent and the speed at no load and full load was to be kept 5 per cent above and 10 per cent below the normal speed respectively. For sudden load reductions of 25, 50 and 100 per cent of the total output, a maximum speed increase of 3.6 and 16 per cent was stipulated.

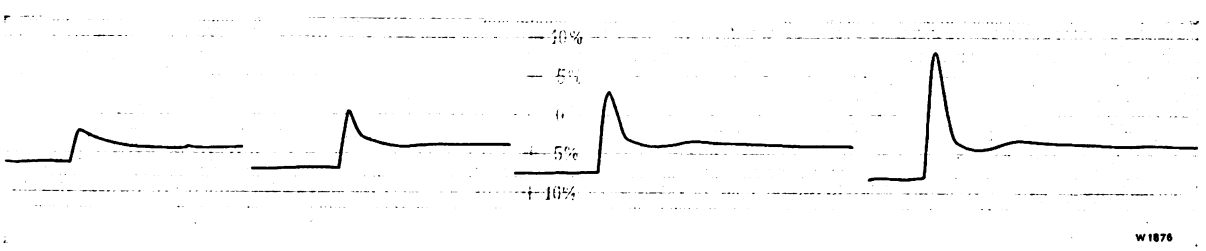

Fig. 1. Tachographs of load being thrown off with the 3000 HP turbine No. 10 in the Augst Power Station.

Digitized by Google

These guarantees were completely fullfilled in every case. The percentage speed rise with the load being thrown off was in some cases even considerably lower than stipulated. The quality of the tachographs was also excellent, especially in view of the inevitable heavy pressure fluctuations in the draught tubes. As an example ad hoc we would refer to Fig. 1, which illustrates the tachographs of four load reductions of ¼, ½, ¾ and full load with machine No. 10.

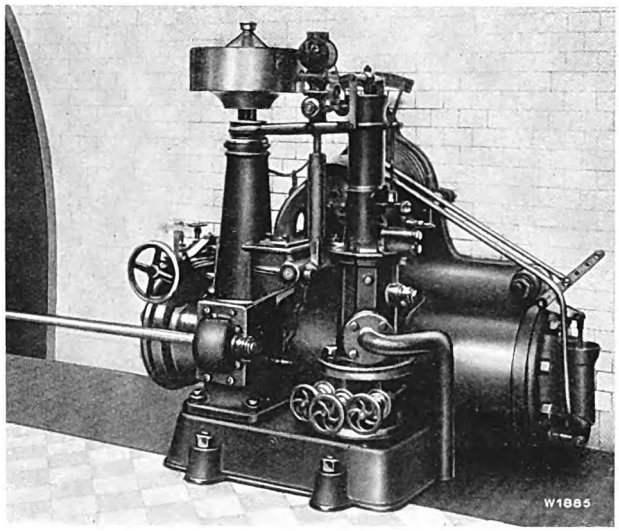

Fig. 2.

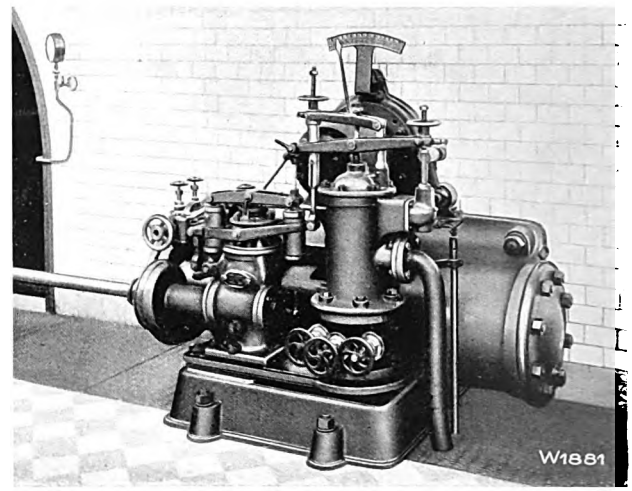

Fig. 3.

To avoid undue shutting down of the plant during inspection and repairs to the actuators, a point was made of providing an ample supply of spare parts, which were to be strictly interchangeable. For this reason a complete spare actuator was purchased and tested on one of the sets so that it might be employed at any time for any of the sets. In addition, a complete oil pump, a pendulum drive with shaft and clutch, and a control valve were also purchased and set aside as spares.

When adapting the new actuators, the original rigid drive was retained in order to minimize the possibility of accidents and all rotating parts were totally enclosed. Fig. 2 illustrates one of the governors before the alterations were made, and Fig. 3 the same governor after completion of the alterations.

In conclusion we would remark that the expectations with regard to the accuracy of the governing, the rapidity and reliability of paralleling, and the reliability of the adjustments were completely realized. Thus our plant as far as its governing gear is concerned has without excessive costs been rendered equivalent to a plant built 16 years later.

b) The Robbia plant of the Kraftwerke Brusio A.-G.

By R. Weber, Consulting Engineer of the power plant at Brusio.

The Pelton turbines installed nearly 20 years ago in the Robbia plant of the Kraftwerke Brusio A.-G., had always to cope with very varying service conditions and unsteady loads. All the turbines were equipped with universal governors of the 1906 type, as shown in Fig. 5 on page 205.

On the occasion of erecting a new unit, the water velocity in the pipeline was considerably increased, which in turn increased the demands on the performance of the governors so that the modernization of the latter had to be seriously considered. As a sequence to electricity supply contracts with Italy,

Digitized by Google

we were also faced by the necessity of alternatively feeding networks operating with frequencies of 40 and 50 cycles with the same machines. With the existing governors, this would have been feasible only by employing a reversible governor drive, which would have necessitated shutting down the sets when switching over from 40 to 50 cycles and vice versa.

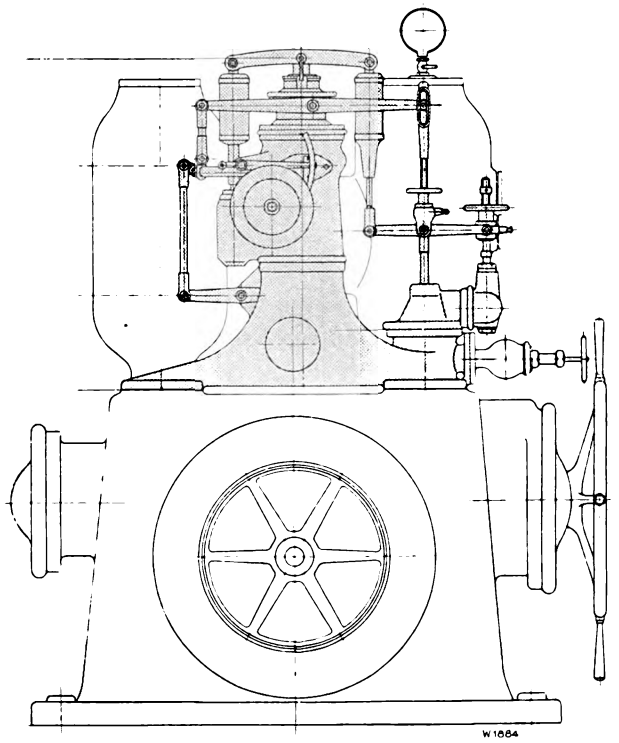

Fig. 4.

To avoid this tedious manipulation all the actuators of old governors were substituted by new actuators, type 25, which offered the special advantage of a wide range of speed adjustment. With the old actuators it was possible to vary the speed about 5 per cent upwards or downwards for the purpose of paralleling and distributing the load but with the new actuators, the speed may be adjusted within the range of 40 to 50 cycles and about 5 per cent in excess thereof. These new actuators made it possible to reduce the load, switch off a set running on 50 cycles, and then switch over to 40 cycles without previously shutting down. This is an outstanding advantage for the operation of the Brusio Works and increases its flexibility and serviceability.

It must be acknowledged that the new actuators were put into service immediately after they were installed, without requiring any finishing touches or final adjustments and without having to shut down the machines again.

They have now been operating most satisfactorily for months on unsteady traction load and on the 40 and 50 cycle networks and have also behaved very well during occasional times when the full load has been thrown off. Contrary to the old actuators, the new ones require no attention or lubrication, and unnecessary interference with the governor mechanism is eliminated.

Fig. 4 illustrates the manner in which the new actuator was adapted to the existing governor and connected with the control valves.

c) The Weidest Works of the Rheintalische Strassenbahnen A.-G. in Altstätten.

By Director E. Egg, Altstätten.

In 1914 two old Pelton turbines running in the Weidest Works of the Rheintalische Strassenbahnen A.-G. were subsituted by a Francis turbine, which under a head of 240 feet and a maximum water quantity of 42 gallons per second develops a maximum output of 150 HP at a speed of 1000 r. p. m. The pipeline supplying the turbine with water has a diameter of 12 inches and is 1585 feet long. As the turbine is equipped with a comparatively small flywheel, considerable difficulty was experienced with the governing owing to the long pipeline, so that the governor, type 1906, size 00 originally supplied with the turbine could only satisfy the stringent service requirements when a floating battery was in parallel with the turbine plant to compensate the fluctuations of current. This battery was installed

Digitized by Google

together with some motor-generator sets in the machine house in Schöntal, Altstätten. After providing a mercury vapour rectifier, this motor-generator

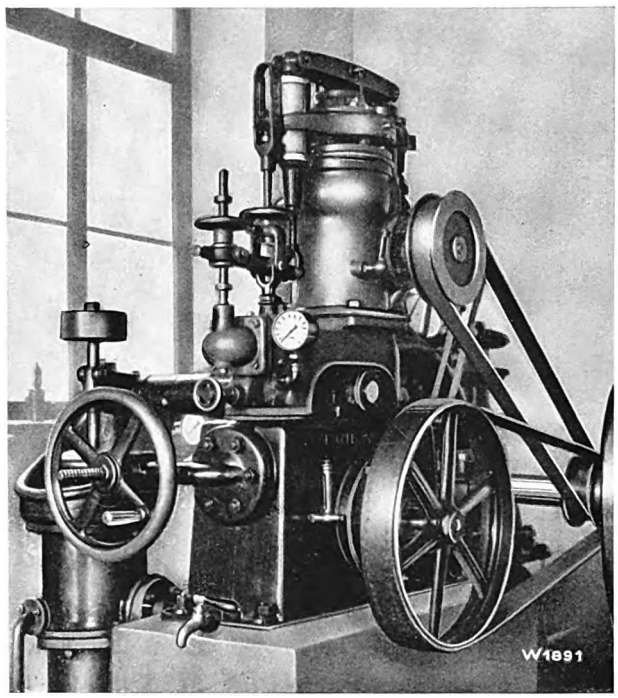

Fig. 5.

plant was used as stand-bye. As the rectifier was amply dimensioned, the battery would have become superfluous, but it turned out that when paralleling the turbine plant on the rectifier alone, the governing was not sufficiently close. The governor was incapable of compensating the load fluctuations of the traction service caused by the heavy current surges.

In answer to our enquiry regarding the possibility of improving the governor, Messrs. Escher Wyss & Co. offered us a new actuator, type 25, for the existing governor. This new apparatus was installed in December 1928 and has since then been in service daily. From the very first moment the tests proved the perfect performance of the new actuator and such a considerable improvement in the governing operations that the turbine plant now provides the necessary power either alone or in parallel with the mercury arc rectifier without having to use the battery.

This battery could, therefore, now be dispensed with and through the comparatively small outlay for the new actuator, the very high cost contemplated for renewing the battery could be completely saved.

Fig. 5 is a close-up view of the governor equipped with the new actuator. The original design is shown in Fig. 3 on page 204 of this number.

Digitized by Google

The control, adjustment and trial runs of universal oil-pressure governors on the test bed.

By E. Bertschinger.

One of the most important conditions for a governor being immediately serviceable when erected on site is the careful checking of all parts during their manufacture and assembly, the accurate testing of the completed governor and a continuous trial run.

It is quite self-understood that during mass production of the governors and especially of actuators, each individual part is subjected to repeated close inspection. A large number of special precision tools and gauges are employed for the manufacture of these parts. The parts subject to wear are made to limit gauges with an accuracy whereby they may at any time be replaced by spare parts taken from stock.

As an example of the scrupulous manufacturing accuracy and of the tests it may be mentioned that the carefully machined pistons of the actuator dashpots are ground in their cylinders and together with these latter are then subjected to an inner oil pressure of about 140 lbs/sq. in., which is many times the pressure to which these parts are exposed under actual service conditions. At this high test pressure no oil must escape from the periphery of the piston in spite of there being no sealing arrangement.

After being assembled, the actuators are brought to the special test bed shown in Fig. 1, where in the first place the pendulums of the actuators are tested and adjusted. For this purpose an electric motor is provided, which by means of an Escher Wyss variable speed gear and belt drives the pendulum shaft. A very large and accurate tachometer of special design is used to check the speeds. This tachometer is calibrated at short intervals and readjusted if needs be, so that its readings are practically free from errors. After the pendulum has been adjusted, the complete actuator is tested, special care being taken that even the minutest irregularity of the pendulum drive is recorded by movements of the pendulum pencil. If this is not the case and there exists any sluggishness in the pendulum, the fault is ascertained and the actuator is not passed until the required standard of sensitivity is obtained. During this test the reliable action of the damping devices is also tested and adjusted if necessary.

Each individual actuator after having passed complete inspection is subjected to a permanent trial run of 48 hours mainly for testing the regulating pump connected with the actuator. During this trial run the pressure and temperature in the actuator are continuously recorded and the cause of any abnormal operation of course removed.

The actuators, which have stood this test, are used for the series of governors of all sizes in course of construction. After assembly of the actuator and governor, the complete apparatus is transferred to the so-called large test bed, Fig. 2, where the lever system of the governor is tested as to its functioning

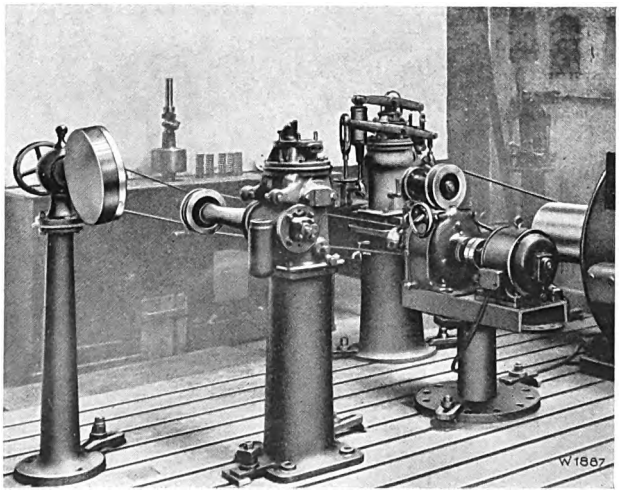

Fig. 1.

Digitized by Google

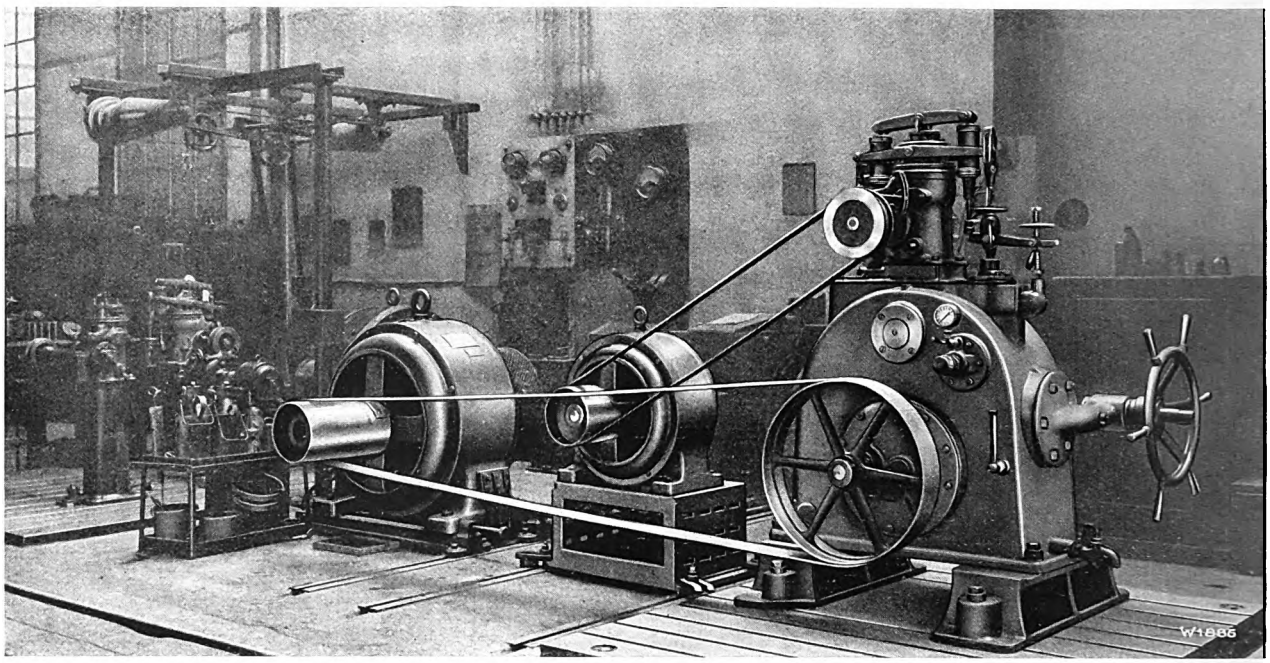

Fig. 2

and finally adjusted. On this test bed, the oil pump and the pendulum are driven by separate motors, whose speed may be varied. After the limits of travel of the levers, the speed-adjusting device, the stroke-limiting device, etc. have been ascertained and adjusted, these positions are fixed by means of collars firmly screwed in place so that in future operation excessive regulation or any other faulty manipulation is prevented. The oil-pressure at which the governors will have to operate is also adjusted during this test. The closing and opening times are determined by exact control with a stop watch and by inserting diaphragms to correspond to the future service conditions. The safety device mentioned in the preceeding articles is also tested as to its correct and reliable functioning before delivery of the governors.

Naturally the checking of the complete governor also covers all relative matters connected with its assembly in conjunction with the turbine, i. e. the direction of closing is tried, and the direction of rotation of the pump and pendulum drive is tested to see that it coincides with that of the turbine. Finally a further lengthy trial run is made during which all ducts carrying oil under pressure and all flanges and valves are tested as to their tightness. When that is the case and the governor functions perfectly in every respect, it is finally passed.

The governor is then provided with a plate bearing the number of the governor and the serial number of the series. All observations made during the several trial runs and likewise all adjustments are entered in a special test book which data may be checked in our works at any time.

Erratum: Regarding the plants Hengstey I and II described on pages 129/130 of our "Escher Wyss News", No. 4, 1929, it should be mentioned that the builder of the two plants is the Ruhrverband, whilst the two stations are operated by the Rheinisch Westfälisches Elektrizitätswerk.

Digitized by Google

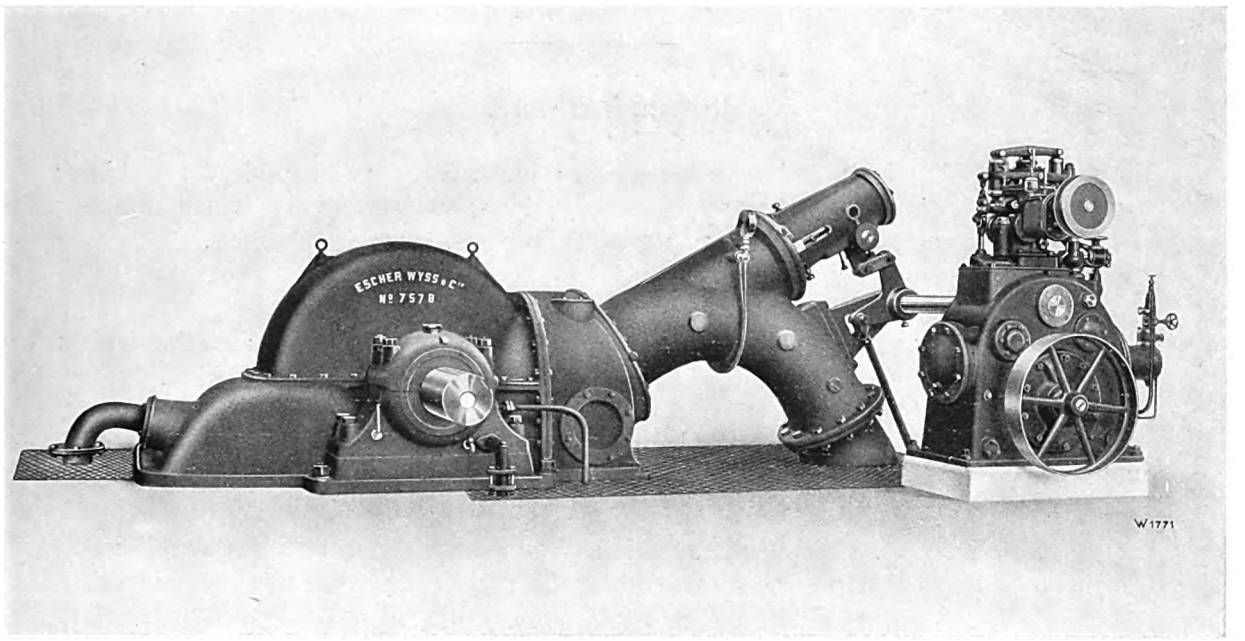

2500 HP Pelton turbine at 500 r. p. m. for the Burglauenen plant (Switzerland) with universal oil-pressure governor.

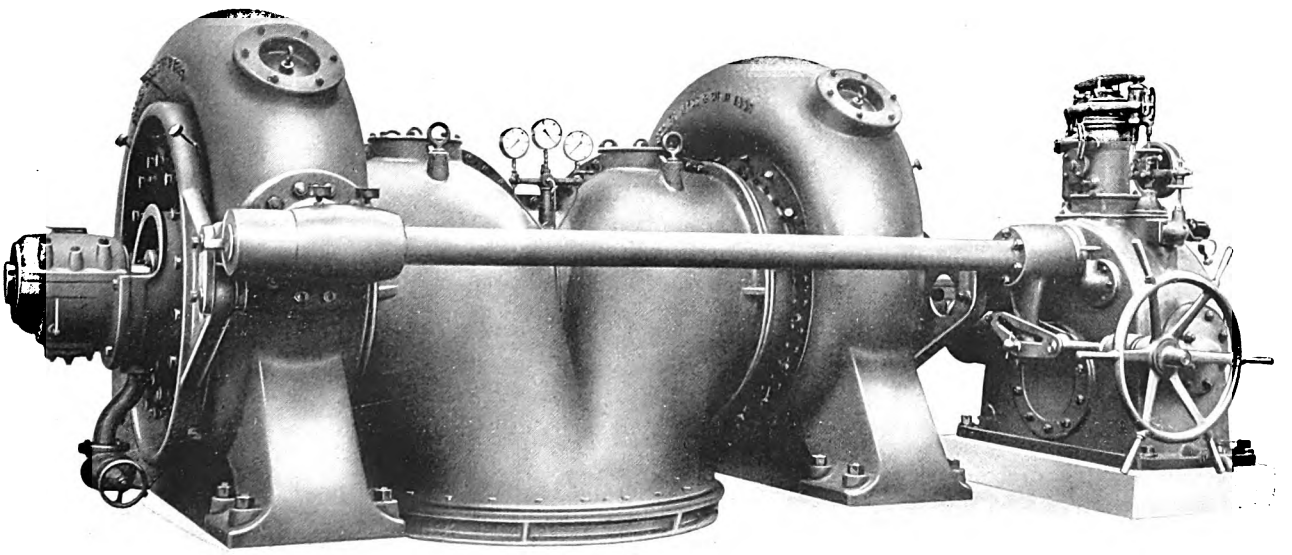

2000 HP twin Francis turbine operating under 76 ft. head with universal oil-pressure governor.

Digitized by Google

Products of Messrs. Escher Wyss & Co.

Steam Turbines

"Zoelly" system

Normal condensing land and marine turbines; locomotive turbines; bleeder turbines; back-pressure turbines; mixed-pressure turbines; low-pressure turbines; small turbines; high-pressure turbines; condensing and preheating installations.

Steam Boilers

Electrically heated boilers; horizontal fire tube boilers; Cornish boilers; marine boilers water tube and vertical tube boilers; boiler work of every description.

Compressors

High-pressure turbo-compressors for mines and other purposes; turbo-blowers for blast furnaces; converter plants for steel works; coke oven blowers; special gas blowers for the chemical industry. Completely automatic regulators for constant pressure, constant volume and other purposes, automatic blow-off regulators; volume integrators etc.

Autovapor Compression and Concentrating Plants

Special turbo-compressors for water vapour; automatic vapour pressure regulators; apparatus for neutralizing vapours.

Water Turbines

with Francis, Pelton, propeller and Kaplan wheels. Complete high-pressure pipelines. Rotary valves. Precision oil-pressure governors.

Pumps

Equipment and installations for complete waterworks. High-pressure and low-pressure turbo-pumps, water storage pumps.

Paper-making Machinery

Installations for complete paper mills; paper-making machines of every description and for every working width; digesters; beaters; edge runners; pulp grinders.

Waste Utilization Plants

for carcases and slaughter house offal; fish meal factories for any capacity.

Ships

Complete paddle wheel boats and screw steamers for lakes and inland navigation.

Gears

Variable speed gears with high efficiency and large and constant range of regulation.

Publishers: Escher Wyss & Co., Zurich (Switzerland).
Printed by: Siegfried & Co., Zürich (Switzerland).
London Office: Escher Wyss & Co., 20 Grosvenor Gardens, Westminster, London S. W. 1.
Tokyo Office: Escher Wyss & Co., Marunouchi Building, Room 322, Tokyo.
New York Office: National Power Machinery Corporation, 2 Rector Street, New York.

Digitized by Google

Digitized by Google

Digitized by Google

Digitized by Google

Digitized by Google

FEB 26 1931

Digitized by Google

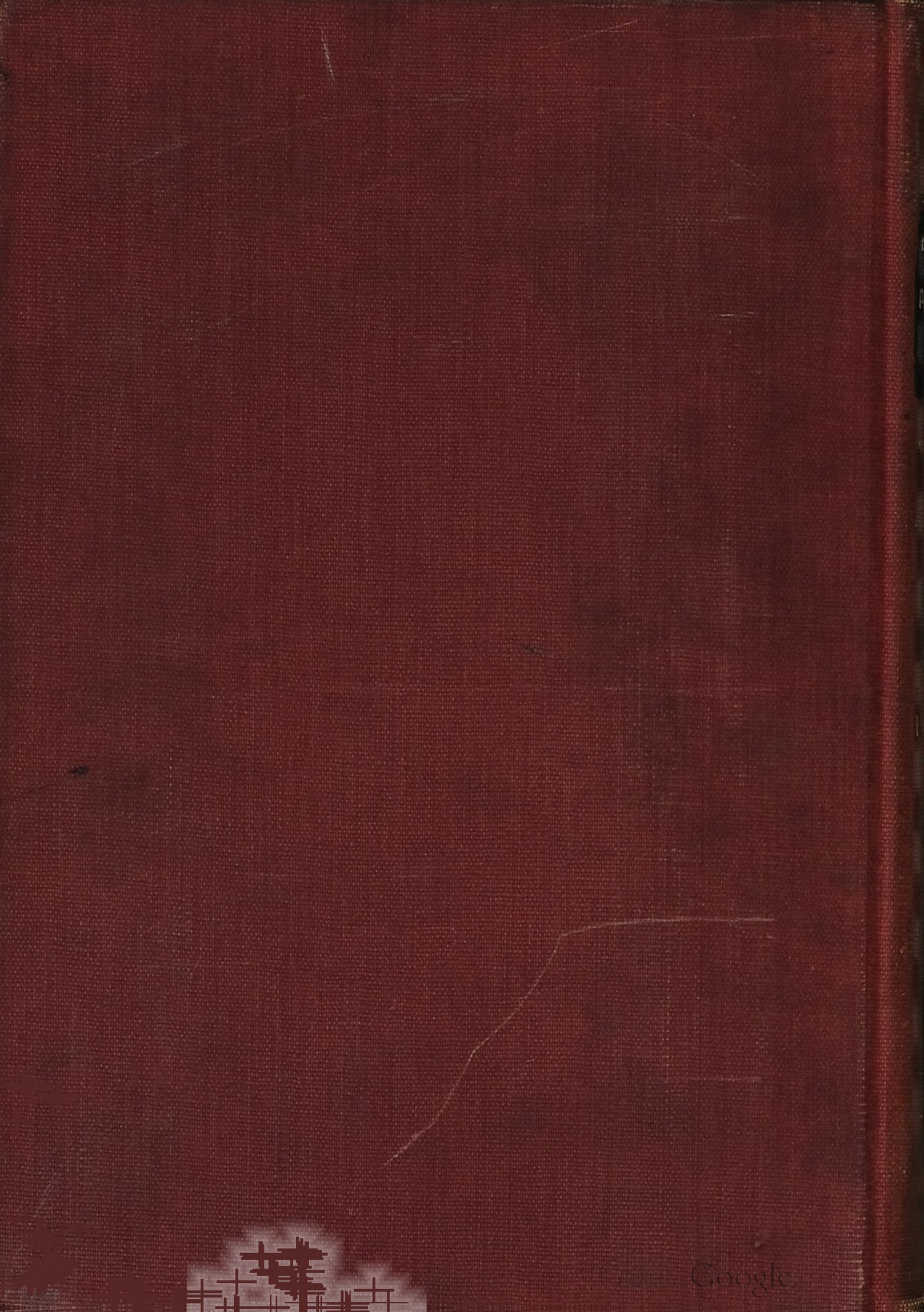
Digitized by Google